Chandler · Arizona
Where Values Make The Difference

**PURCHASING ITEM**
**FOR**
**COUNCIL AGENDA**
**Memo No. CP16-055**

**1. Agenda Item Number**: 42

**2. Council Meeting Date**: September 24, 2015

**TO:** **MAYOR AND COUNCIL**

**THROUGH:** **CITY MANAGER**

**3. Date Prepared**: September 9, 2015

**4. Requesting Department**: Municipal Utilities

**5. SUBJECT**: Construction Manager at Risk Contract to CSW Contractors, Inc., for Large Valve Replacement

**6. RECOMMENDATION**: Staff recommends City Council award a Construction Manager at Risk Contract to CSW Contractors, Inc., for Large Valve Replacement, Contract No. WA1504.401, in an amount not to exceed $1,154,604.20.

**7. BACKGROUND/DISCUSSION**: An assessment, evaluating the condition of water valves with a diameter of 20-inches and larger, has identified two 48-inch butterfly valves that need replacement. One valve is located west of the intersection of McQueen and Pecos roads, and the other valve is located east of Fire Station No. 1 at 1491 E. Pecos Road. Excavation of the areas to determine proper locations and dimensions was performed under CSW Contractors, Inc. Preconstruction Contract No. WA1504.251.

The project scope of work consists of: dewatering, replacement of 96-feet of Prestressed Concrete Cylinder Pipe (PCCP), installation of two gate valves, valve vaults, a condition assessment of the existing PCCP, disinfection, and start-up.

A Project Agreement for construction management services, Project No. WA1504.451, with Dibble Engineering, Inc., for Large Valve Replacement, is also scheduled for this Council meeting.

**8. EVALUATION PROCESS:** The selection process was followed in accordance with State law. Three (3) Statements of Qualifications were received from qualifying firms on February 23, 2015.

The Selection Committee reviewed the Statements of Qualifications on March 10, 2015, and ranked each firm as follows:

1. CSW Contractors, Inc.
2. Achen-Gardner Construction, LLC
3. PCL Construction, Inc.

Staff recommends contract award to CSW Contractors, Inc., based on qualifications, relevant firm experience, team experience, project understanding, and project approach. The construction contract time is 100 calendar days for substantial completion, and 130 calendar days for final completion, following Notice to Proceed.

**9. FINANCIAL IMPLICATIONS**:

Cost: $1,154,604.20
Savings: N/A
Long Term Costs: N/A

Fund Source:

| Account No.: | Fund Name: | Program Name: | CIP Funded: | Amount: |
|---|---|---|---|---|
| 601.3820.6712.6WA023 | Water Bonds | Main & Valve Replacement | Yes | $1,154,604.20 |

**10. PROPOSED MOTION**: Move City Council award a Construction Manager at Risk Contract to CSW Contractors, Inc., for Large Valve Replacement, Contract No. WA1504.401, in an amount not to exceed $1,154,604.20.

**ATTACHMENTS:** Location Map, Contract

**APPROVALS**

**11. Requesting Department**
John Knudson, Utilities Engineering Manager

**13. Department Head**
Dave Siegel, Municipal Utilities Director

**12. Transportation & Development**
Bob Fortier, Capital Projects Manager

**14. City Manager**
Marsha Reed, Acting City Manager

Chandler + Arizona

# LARGE VALVE REPLACEMENT
# PROJECT NO. WA1504.401

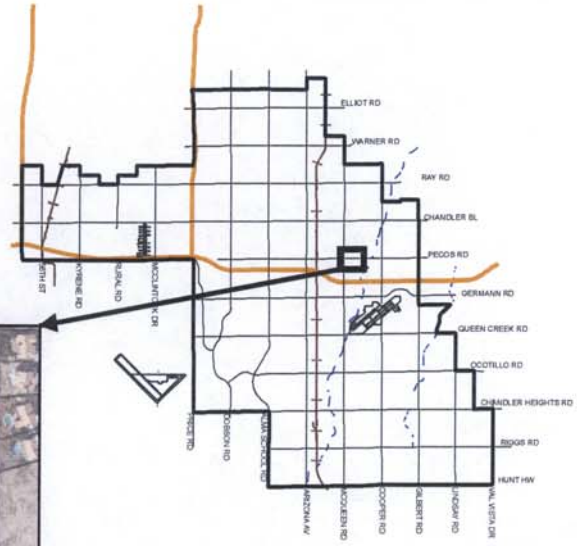


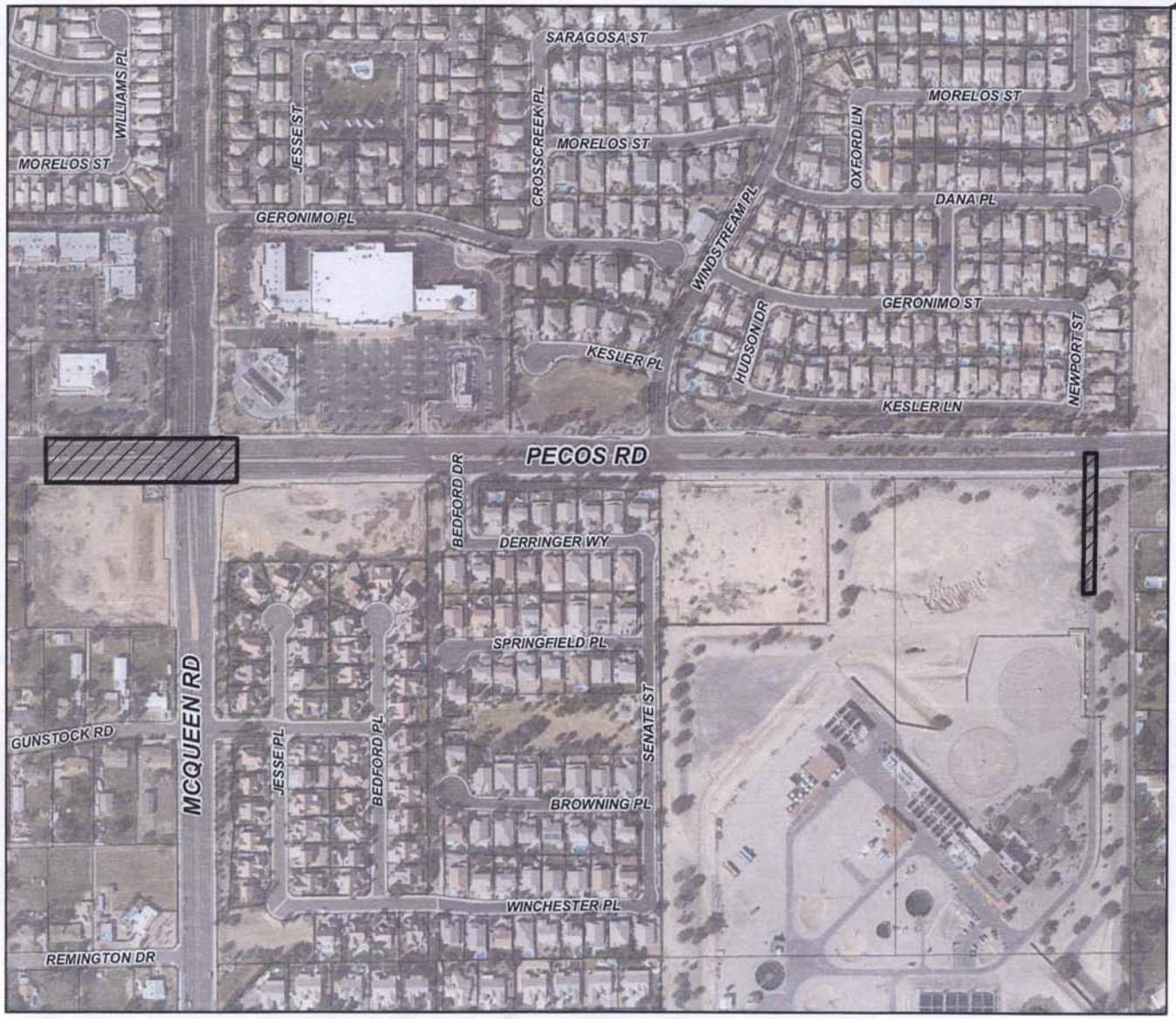


**MEMO NO. CP16-055**

PROJECT LOCATION

NTS

ChanGIS

F:\ENGINEER\GENSERV_ArcMap_Shared\Map Requests\Capital Projects\CP16-055 LARGE VALVE REPLACEMENT PROJECT\CP16-055.mxd 9/10/2015 SALLYB

**PROJECT TITLE: LARGE VALVE REPLACEMENT**
**PROJECT NO: WA1504.401**

This CONTRACT is made this ____ day of _____, 2015, by and between the City of Chandler, 215 E. Buffalo Street, Chandler, Arizona 85225, (hereinafter referred to as "CITY,") and **CSW Contractors, Inc.**, (hereinafter referred to as "CM@RISK.")

CITY and CM@RISK, in consideration of the mutual covenants hereinafter set forth, agree as follows:

## ARTICLE 1 – CITY'S STANDARD CONSTRUCTION GENERAL CONDITIONS:

The City's General Conditions for Construction Contracts are incorporated herein by reference and the parties agree to be bound by all provisions therein. If any of the provisions of the contract conflict with the City's General Conditions for Construction Contracts, the parties are bound by the General Conditions. For the purposes of this Contract, references to CONTRACTOR and to CM@RISK in said General Conditions refer to CM@RISK herein.

## ARTICLE 2 – DEFINITIONS:

Words used in this Contract which are defined in CITY's General Conditions for Construction Contracts shall have the meaning stated therein. CM@RISK is the CONTRACTOR as defined in said General Conditions.

2.1 "Construction Allowance Items" means those items included in the GMP as allowances, which items shall be paid based on the actual cost to CM@RISK as described in the City's General Conditions for Construction Projects, Subsection 12.4., provided, however, no overhead or profit shall be included in the item as these are paid separately. The actual amounts paid for Allowance items shall be included in the Contract Price Subtotal by which the percentage for the Contractor's fee for overhead and profit is multiplied.

2.2 "Guaranteed Maximum Price" (GMP) means the maximum amount to be paid by the City to CM@RISK for the performance of the Work which shall constitute payment in full for the furnishing of all materials, equipment, appurtenances, labor, plant and tools necessary to provide a complete workmanlike, finished and satisfactory Project as described herein.

## ARTICLE 3 – CM@RISK – FIDUCIARY DUTY:

3.1 This is a contract for complete construction services in accordance with the Construction Manager at Risk method of delivery of construction services. CM@RISK has participated in the design process and been an active member of the Project Design Team and is fully aware of any issues and constraints involved in this construction project.

3.2 CM@RISK is the CITY's fiduciary responsible for undertaking all necessary action contemplated under the contract documents to construct the Project and ensure timely and quality completion of the project at a cost within the Guaranteed Maximum Price (GMP).

This project is an "open book" project. CITY is entitled to attend any and all meetings, and CITY shall have access to any and all records of CM@RISK or maintained by CM@RISK relating to the Project.

## ARTICLE 4 – WORK:

4.1 CM@RISK shall perform all work necessary to complete the Project described herein. The Project is known as and is hereinafter referred to as, CITY PROJECT NO. WA1504.401 and is described as follows: construction of LARGE VALVE REPLACEMENT described in the Contract Documents and including the furnishing of all materials, equipment, appurtenances, labor, plant and tools necessary to provide a complete workmanlike, finished and satisfactory Project as described herein. Each item shall be completed with all necessary connections, testing, painting and related work accomplished to provide for the satisfactory use and/or operation of the item.

4.2 CM@RISK shall complete, provide and perform, or cause to be performed, all work in a proper and workmanlike manner, with appropriate consideration for public safety and convenience, consistent with the highest standards of professional and construction practices and in full compliance with, and as required by or pursuant to, this Contract, and with the greatest economy, efficiency, and expediency consistent therewith all as more particularly described in the Contract Documents.

## ARTICLE 5 – CITY'S REPRESENTATIVE:

5.1 CITY has appointed a CITY'S REPRESENTATIVE (sometimes referred to as CITY REP and sometimes known as the Owner's Representative or Construction Manager) to manage this Project and to represent the CITY on the Project site. The CITY REP will assume all duties and responsibilities and will have all rights and authority assigned to the CITY REP in the Contract Documents in connection with completion of the Work in accordance with the Contract Documents. Any references in the Contract Documents, or other pertinent documents, to the Engineer or Project Engineer shall mean the CITY REP.

5.2 The CITY'S Representative is Dara Griffith

## ARTICLE 6 - CONTRACT TIME:

6.1 Completion time. The Work shall be substantially complete within **One Hundred (100)** calendar days after the date when the Contract Time commences to run as provided in the Contract Documents, and all Work shall be finally completed and ready for final payment in accordance with the Contract Documents within **One Hundred Thirty (130)** calendar days after the date when the Contract Time commences to run.

6.2 CPM Schedule. CM@RISK shall submit to CITY, on or before the effective date of the Construction Contract, a Construction Progress Schedule in Critical Path Method (CPM) format indicating the times for starting and completing the various stages of the Work, including any Milestones specified in this Contract and as more fully described in the General Conditions and other Contract Documents. Revisions/updates to the CPM schedule shall be submitted as often as necessary to accurately reflect plans for completion of the work, but no less frequently than required in the Contract Documents.

6.3 Time is of the Essence. All of the time limits for Milestones, if any, for Substantial Completion and for Final Completion and readiness for final payment as stated in the Contract Documents, are of the essence of the Contract.

6.4 No Waiver. Failure of CITY to insist upon the performance of any covenant or condition within the time periods specified herein, shall not constitute a waiver of CM@RISK'S duty to perform every other covenant or condition within the designated periods, unless a specific waiver is granted in writing for each such covenant or condition.

6.5 Specific Waiver. CITY'S agreement to waive a specific time provision or to extend the time for performance shall not constitute a waiver of any other time provisions contained in the Contract Documents. Failure of CM@RISK to complete performance promptly within the additional time authorized in the waiver or extension of time agreement shall constitute a material breach of this Contract entitling CITY to all the remedies set forth herein or provided by law.

6.6 Material Breach. Failure of CM@RISK to perform any covenant or condition contained in the Contract Documents within the time periods specified herein, shall constitute a material breach of this Contract entitling CITY to terminate the Contract unless CM@RISK applies for and receives an extension of time, in accordance with the procedures set forth in the Contract Documents.

6.7 Written Extensions. Failure of CITY to insist upon the performance of any covenant or condition within the time periods specified herein, or CITY's agreement to waive a specific time provision or to extend the time for performance shall not constitute a waiver of CM@RISK's duty to perform every other covenant or condition within the designated periods, unless a specific waiver is granted in writing for each such covenant or condition. Failure of CM@RISK to complete performance promptly within the additional time authorized in the waiver or extension of time agreement shall constitute a material breach of this Contract entitling CITY to all the remedies set forth herein or provided by law.

## ARTICLE 7 - LIQUIDATED AND SPECIAL DAMAGES:

7.1 Liquidated Damages: It is hereby agreed that the amounts per day set forth herein in paragraphs 7.1.2. are reasonable estimates of such damages, that said amounts do in fact bear a reasonable relationship to the damage that would be sustained by CITY, and CM@RISK agrees to pay such liquidated damages as herein provided.

7.1.1 CITY and CM@RISK recognize that time is of the essence of this Contract and that CITY will suffer financial loss, in addition to and apart from the costs described in Paragraph 7.2, if the Work and/or portions of the Work are not performed and completed within the times specified in Article Six, plus any extensions thereof allowed in accordance with the Contract Documents. CITY and CM@RISK also recognize the delays, expense, and difficulties involved in proving, through legal or arbitration proceedings, the actual loss suffered by CITY if the Work or portion of the Work is not completed on time. Accordingly, instead of requiring any such proof, CITY and CM@RISK agree that as liquidated damages for delay (but not as a penalty) CM@RISK shall pay CITY **Seven Hundred Ten** dollars and no cents (**$710**) for each calendar day that expires after the time specified in Article Six for substantial completion, until the Work is

substantially complete. After Substantial Completion, if CM@RISK shall neglect, refuse or fail to complete the remaining Work within the Contract Time or any proper extension thereof granted by CITY, CM@RISK shall pay CITY **Three Hundred Fifty Five** dollars and no cents ($**355**) for each day that expires after the time specified in Article Six for final completion and readiness for final payment.

7.2 Special Damages: In addition to the amounts provided for liquidated damages, CM@RISK shall pay CITY the actual costs reasonably incurred by CITY for the CITY REP, the Project Designer and for engineering and inspection forces employed on the Work for each day that expires after the time specified in Article Six for Final Completion, including any extensions thereof made in accordance with the Contract Documents, until the Work is finally complete. The rate for inspection services for this contract is One Hundred Forty Eight dollars ($148) per hour. The rate for work by the Project Designer for this Contract is One Hundred Ninety dollars ($190) per hour. The rate for work by the CITY REP is One Hundred Ninety dollars ($190) per hour. Each of these hourly rates is calculated at time and one half for work required to be performed during other than normal business hours.

7.3 CITY may withhold and deduct from any payment due to CM@RISK the amount of liquidated damages, special damages, and other costs, such as CM@RISK'S failed testing costs or damages to other CITY property, from any moneys due CM@RISK under the Contract.

## ARTICLE 8 - CONTRACT PRICE:

8.1 Guaranteed Maximum Price. The Guaranteed Maximum Price (GMP) is the total amount payable by the City to Contractor for the complete construction of the Project. CM@RISK represents, warrants and guarantees to CITY that the total maximum cost to be paid by CITY for CM@RISK's complete performance of this Contract, including, without limitation, Final Completion of all Work, all services of CM@RISK under this Contract, and all fees, compensation and reimbursements to CM@RISK, shall not exceed the total amount of **One Million One Hundred Fifty Four Thousand Six Hundred Four dollars and Twenty cents ($1,154,604.20)** ("Guaranteed Maximum Price"), as set forth in Exhibit B, attached hereto and incorporated herein by reference. Costs which would cause the Guaranteed Maximum Price to be exceeded shall be paid by the CM@RISK without reimbursement by CITY.

8.2 Guaranteed Maximum Price Components. The Guaranteed Maximum Price is comprised of the maximum amount payable by CITY for:

8.2.1 The Cost of the Work for full and complete performance of the Work to complete the Project as described herein. The items to be included in Cost of Work are those listed in Section 12.4 of the City's General Conditions for Construction Projects, except that no overhead and profit shall be included in the cost of work and shall be subtracted out of items listed in 12.4 A 5) c, and the items listed in 12.4.A 5) d and h are not included in the cost of the work. The Cost of the Work will be referred to as the Work Item Direct Costs. No additional payments will be made for any work included in and/or necessary for completion of the Project unless specifically noted and excluded from the GMP in the assumptions and clarifications of the GMP. Progress payments will be made based on the schedule of values, however, City reserves the right to audit the

books of CM@RISK, at any time, to determine actual costs and to modify the schedule of values to better reflect actual costs of the work.

8.2.2 A fee to CM@RISK for Overhead and Profit which has been estimated for inclusion in the GMP to be the amount of Ninety Two Thousand Six Hundred Six dollars and Nineteen cents ($92,606.19) ("CM@RISK's Fee"). This fee shall be determined by multiplying the agreed upon percentages listed in the GMP by the Work Item Direct Costs less the amounts listed for Contractor's General Conditions. This CM@RISK's Fee shall be the CM@RISK's sole and exclusive compensation for all costs not included in Subsections 8.2.1 or 8.2.3 herein and for those costs and expenses listed in Subsection 12.4 B and 12.5 of the City's General Conditions for Construction Projects, and is inclusive of all overhead and profit arising out of or relating to the CM@RISK's Work.

8.2.3 Reimbursement to CM@RISK by CITY for the cost of insurance, bonds and taxes actually incurred by CM@RISK for this Project.

8.2.4 The Guaranteed Maximum Price is further broken down into line items and categories on Exhibit B attached hereto.

Quantities. The quantities set forth in the GMP are used only for the purpose of substantiating and demonstrating the basis for the GMP submitted by CM@RISK and are not a part of this Contract nor any guarantee by CITY. CM@RISK shall install and perform such quantities as necessary to complete the Project in accordance with the Project description and the Contractor agrees to perform all of the Work for costs plus fees and reimbursements described herein, not to exceed the Guaranteed Maximum Price, regardless of whether or not the items or units are decreased or increased.

8.3 Cost Overruns. CM@RISK shall be solely liable and responsible for and shall pay any and all costs, fees and other expenditures in excess of the Guaranteed Maximum Price for and/or relating to the Work, without entitlement to reimbursement from CITY. CM@RISK is not entitled to any fee, payment, compensation or reimbursement under this Contract or relating to the Work or Project other than as expressly provided in this Article 8.

8.4 Inferable Work (intent of the Project). CM@RISK agrees that the scope of the Guaranteed Maximum Price includes Work not expressly indicated on the Contract Documents, but which is reasonably inferable from the Project description and/or Contract Documents, or consistent therewith, and such Work shall be performed by CM@RISK without any increase in the Guaranteed Maximum Price.

8.5 Allowances. The GMP includes some work items with the cost listed as an allowance. Allowances are to be used specifically for the areas of work defined in the Contract Documents; provided however,

8.5.1 If the designated work is completed for less than the allowance, the surplus will revert to the project construction contingency.

8.5.2 If the designated work requires more than the allowance, the additional funds will be allocated by the CITY with assistance from CM@RISK within the GMP by transferring excess from other allowance items, value engineering or

using less expensive means, methods or components or as a last resort reducing the scope of the Project.

8.5.3 A running balance sheet will be kept concerning the various allowances so that monies can be floated among the allowances to maintain the integrity of the overall GMP. Thus, savings in one area of work will be available to offset overruns in another area of work specifically associated with these allowances.

8.6 Construction Contingency. This GMP includes a dollar amount listed as a Construction Contingency which shall be readily available for increased costs for subcontractors, material and equipment subject to prior approval of City, which approval will not be withheld unreasonably. The Construction Contingency may also be used, at the discretion of CITY, to reimburse CM@RISK for unexpected costs due to (a) scope gaps between trade subcontractors; (b) contract default by trade subcontractors; (c) unforeseen field conditions but only as defined in Subsection 4.3 of the City's General Conditions for Construction Projects; (d) work completed to meet the intent of the design, but which was not indicated on the plans; (e) costs overruns not covered by allowances; (f) costs of corrective work not provided for elsewhere and (g) implementation of any Recovery Plan. Cost for which CM@RISK desires to be paid from the Construction Contingency shall be documented by CM@RISK on a time and materials basis and are subject to verification by the CITY. If agreed to by CITY, a "Use of Contingency" form shall be executed by both parties authorizing the actual cost of the work to be paid and included in the Work Item Direct Costs. The Construction Contingency is not allocated to any particular item of the Project but may be used for any portion of the work as determined above. Any amount not used in the Construction Contingency shall belong to the CITY and shall reduce the GMP.

8.7 Owner's Contingency. This GMP also includes a dollar amount listed as an Owner's Contingency which may be used only by the CITY (owner department) for upgrades and changes in scope or other changes not already included within the intent of the Project Program. CITY shall provide CM@RISK with a Work Change Directive authorizing CM@RISK to perform the additional work and to transfer funds from the Owner's Contingency to the Work Item Direct Costs category to be paid with such direct costs. These additional costs shall be in amount mutually agreed upon by CM@RISK and CITY or shall be documented by CM@RISK on a time and materials basis and are subject to verification by the CITY. Any amount not used in the Owner's Contingency shall belong to the CITY and shall reduce the GMP.

8.8 Reduction of the Work. If CITY elects to have a party other than CM@RISK, or one of CM@RISK's Subcontractors, perform the Work related to an Allowance Item or other portion of the Work, or otherwise eliminates or reduces the scope of an Allowance Item or other portion of the Work, the Guaranteed Maximum Price shall be reduced by the Allowance Amount for any such Allowance Item or the budgeted amount in the Guaranteed Maximum Price for such item, and such amount shall be excluded from the Work Item Direct Costs upon which the CM@RISK's Fee is calculated.

8.9 Taxes. CM@RISK shall pay all existing and future applicable Federal, State and local sales, consumer, use and similar taxes, whether direct or indirect, relating to, or incurred in connection with the performance of the Work. In the event CM@RISK is obligated to pay any new or increased taxes or duties arising after the date hereof, the amount of such new or increased taxes shall increase the Guaranteed Maximum Price pursuant to the Change Order provisions of this Contract as set forth in the General Conditions. In the event CM@RISK receives the benefit of a tax exemption or tax

reduction taking effect after the date hereof, the amount of such exemption or reduction shall decrease the Guaranteed Maximum Price pursuant to the Change Order provisions of this Contract.

## ARTICLE 9 - PAYMENT PROCEDURES:

9.1 Schedule of Values. Before the first application for Payment, CM@RISK shall submit to CITY, and the parties shall agree upon, a Schedule of Values, setting forth the various portions of the Work, and the costs listed in the Guaranteed Maximum Price allocated to each such portion of the Work. The Schedule shall be used as a basis for reviewing the contractor's applications for payment and as a basis for progress payments. The Schedule of values shall be updated as actual costs become known to accurately reflect the cost of the work. City reserves the right to audit the books of CM@RISK, at any time, to determine actual costs and to modify the schedule of values to better reflect actual costs of the work. At Project completion and prior to final payment the parties will reconcile the schedule of values with the actual costs in accordance with provisions in Article Eight herein to determine the final payment.

9.2 Applications for Payment. CM@RISK shall submit completed Applications for Payment in accordance with the Contract Documents. No payment application will be considered complete unless it is accompanied by an updated Construction Progress Schedule and a certification that the on-site, red lined, as-built drawings are up to date. Completed Applications for Payment will be processed by CITY REP as provided in the Contract Documents.

9.3 Waiver of Claims at Final Payment. Acceptance of Final Payment by CM@RISK shall constitute a waiver of affirmative claims by CM@RISK except those previously made in writing and identified as unsettled at the time of Final Payment.

9.4 Retention. Prior to Substantial Completion, progress payments will be made in the amount equal to the percentages indicated below, but in each case less the aggregate of payments previously made and less such amounts as CITY'S REPRESENTATIVE may determine, in accordance with the General Conditions or other provisions of the Contract Documents.

9.4.1 To insure the proper performance of the contract CITY shall retain ten per cent (10%) of the amount of each approved progress payment until the Work is fifty percent (50%) complete.

9.4.2 When the Work is fifty percent (50%) complete as measured by the schedule of values and approved by CITY REP, one-half of the amount retained under the ten percent (10%) retention provision, shall be paid to CM@RISK, provided CM@RISK is on schedule for project completion and is making satisfactory progress on the Work and there is no specific cause or claim requiring a greater amount to be retained. After fifty percent (50%) completion, CITY shall retain five percent (5%) of each approved progress payment providing CM@RISK is on schedule for project completion, is making satisfactory progress on the Work, except that if at any time CITY determines satisfactory progress is not being made, ten percent (10%) retention shall be reinstated for all progress payments made under the contract subsequent to such determination

9.4.3 In lieu of retention, CITY will, at the option of CM@RISK, accept security as provided in ARS § 34-221.

9.5 CITY may withhold and deduct from each progress payment and final payment an amount equal to CITY'S estimate of the liquidated damages then due, or that would become due based on CITY'S estimate of late completion of the Work, provided CM@RISK fails to submit and implement a written schedule recovery plan describing the cause of schedule slippage or delayed progress and the actions proposed and taken to recover schedule slippage.

9.6 Final Payment. Upon final completion and acceptance of the Work and upon compliance with all other terms and conditions of the Contract Documents, CITY shall pay the remainder of the Contract Price, including retainage withheld, less such deductions as may be withheld to cover claims in accordance with state law and the Contract Documents, and to cover liquidated and special damages and other charges owing to CITY.

## ARTICLE 10 – CHANGES TO CONTRACT GMP:

10.1 Changes to Scope. CITY reserves the right to change the scope of the Project by adding or deducting work to be performed by CM@RISK under this Contract. Increases to the scope of work to be paid for out of the Owner's Contingency shall be documented by a Work Change Directive. Deductions from the work and additions after the Owner's Contingency has been exhausted shall be documented by a Change Order executed by both parties.

## ARTICLE 11 - CM@RISK'S REPRESENTATIONS:

As part of the inducement for CITY to enter into this Contract, CM@RISK makes the following representations:

11.1 CM@RISK was a member of the Design Team for this Project and participated in and provided recommendations concerning the Contract Documents and Project Design.

11.2 CM@RISK has examined and carefully studied the Contract Documents (including any Addenda) and other related data identified in the Bidding Documents, including "technical data" and all federal, state and local laws, ordinances, standards, rules and regulations that in any manner may affect cost, progress, performance or furnishing of the Work.

11.3 CM@RISK has obtained and carefully studied (or assumes responsibility for having done so) the reports of investigations, explorations, tests, studies and data concerning conditions (surface, subsurface and Underground Facilities) and the drawings of physical conditions in or relating to existing surface or subsurface structures, at or contiguous to the site or otherwise which may affect cost, progress, performance or furnishing all the Work or which relate to any aspect of the means, methods, techniques, sequences and procedures of construction to be employed by CM@RISK and safety precautions and programs incident thereto. The reports and drawings available to CITY are listed in the Supplementary Conditions. CM@RISK acknowledges that such reports and drawings are not Contract Documents and may not be complete for CM@RISK's purposes. CM@RISK acknowledges that CITY and CITY'S REP do not assume responsibility for the accuracy or completeness of information and data shown or indicated therein with respect to Underground Facilities at or contiguous to the site. CM@RISK acknowledges full responsibility for locating and resolving any conflicts with any Underground Facilities.

11.4 CM@RISK has visited the site and become familiar with and is satisfied as to the general, local and site conditions that may affect cost, progress, performance or furnishing of the Work.

11.5 CM@RISK has made or caused to be made examinations, investigations, tests, studies and related data as he deems necessary, and CM@RISK does not consider that any additional examinations, investigations, explorations, tests, studies or data are necessary for the performance and furnishing of the Work at the Contract Price, within the Contract Times and in accordance with the other terms and conditions of the Contract Documents.

11.6 CM@RISK has correlated the information known to CM@RISK, information and observations obtained from visits to the site, reports and drawings identified in the Contract Documents and all additional examinations, investigations, explorations, tests, studies, reports, and data, with the terms and conditions of the Contract Documents.

11.7 CM@RISK has given CITY REP written notice of all conflicts, errors, or discrepancies that CM@RISK has discovered in the Contract Documents, and the written resolution thereof by CITY is acceptable to CM@RISK, and the Contract Documents are sufficient to indicate and convey understanding of all terms and conditions for performance and furnishing of the Work. CM@RISK assumes full responsibility and liability for any conflicts, errors or discrepancies in the Contract Documents, including, but not limited to, the specifications, design and engineering for the project, for which written notice has not been provided and which a reasonable Contractor, participating in the Design Process as the Construction Manager at Risk would have discovered.

## ARTICLE 12 – CONTRACT DOCUMENTS, DRAWINGS AND ADDENDA:

The Contract Documents which comprise the entire Contract between CITY and CM@RISK concerning the Work consist of those listed below. There are no Contract Documents other than the following:

12.1 This Contract

12.2 The project Design, Engineering and Specifications entitled: LARGE VALVE REPLACEMENT Project No. WA1504.401

12.3 The Drawings, comprised of a set entitled: LARGE VALVE REPLACEMENT Project No. WA1504.401

12.4 Performance Bond and Payment Bond.

12.5 The approved Construction Schedule (CPM).

12.6 General Conditions (pages 1 to 55, inclusive).

12.7 Notice to Proceed.

12.8 Approved Construction GMP and attached Assumptions

12.9 CM@RISK'S Schedule of Manufacturers and Suppliers of Major Equipment and Material Items.

12.10 The following which may be delivered or issued after the Effective Date of this Contract and are not attached hereto:

A. Written Amendments;
B. Work Change Directives;
C. Change Order(s).

## ARTICLE 13 – BONDS:

CM@RISK shall furnish Payment and Performance bonds, each in an amount at least equal to the Contract Price, as security of the faithful performance and payment of all CM@RISKS obligations under the contract documents. Exhibit D and Exhibit E attached hereto and incorporated in by reference.

## ARTICLE 14 – INSURANCE:

**1. General.**

A. At the same time as execution of this Contract, the **CONTRACTOR** shall furnish the City a certificate of insurance on a standard insurance industry ACORD form. The ACORD form must be issued by an insurance company authorized to transact business in the State of Arizona possessing a current A.M. Best, Inc. rating of A-7, or better and legally authorized to do business in the State of Arizona with policies and forms satisfactory to CITY. Provided, however, the A.M. Best rating requirement shall not be deemed to apply to required Worker's Compensation coverage.

B. The **CONTRACTOR** and any of its subcontractors shall procure and maintain, until all of their obligations have been discharged, including any warranty periods under this Contract are satisfied, the insurances set forth below.

C. The insurance requirements set forth below are minimum requirements for this Contract and in no way limit the indemnity covenants contained in this Contract.

D. The City in no way warrants that the minimum insurance limits contained in this Contract are sufficient to protect **CONTRACTOR** from liabilities that might arise out of the performance of the Contract services under this Contract by **CONTRACTOR,** its agents, representatives, employees, or subcontractors and the **CONTRACTOR** is free to purchase any additional insurance as may be determined necessary.

E. Failure to demand evidence of full compliance with the insurance requirements in this Contract or failure to identify any insurance deficiency will not relieve the **CONTRACTOR** from, nor will it be considered a waiver of its obligation to maintain the required insurance at all times during the performance of this Contract.

F. Use of Subcontractors: If any work is subcontracted in any way, the CONTRACTOR shall execute a written agreement with Subcontractor containing the same Indemnification Clause and Insurance Requirements as the City requires of the **CONTRACTOR** in this Contract. The **CONTRACTOR** is responsible for executing the Contract with the Subcontractor and obtaining Certificates of Insurance and verifying the insurance requirements.

**2. Minimum Scope and Limits of Insurance.** The **CONTRACTOR** shall provide coverage with limits of liability not less than those stated below.

A. **Commercial General Liability-Occurrence Form.**

1. **CONTRACTOR** must maintain "occurrence" form Commercial General Liability insurance with a limit of not less than $2,000,000 for each occurrence, $4,000,000 aggregate. Said insurance must also include coverage for products and completed operations, independent contractors, personal injury and advertising injury. If any Excess insurance is utilized to fulfill the requirements of this paragraph, the Excess insurance must be "follow form" equal or broader in coverage scope than underlying insurance.

B. **Automobile Liability-Any Automobile or Owned, Hired and Non-Owned Vehicles. CONTRACTOR** must maintain Business/Automobile Liability insurance with a limit of $1,000,000 each accident on **CONTRACTOR** owned, hired, and non-owned vehicles assigned to or used in the performance under this Contract. If any Excess or Umbrella insurance is utilized to fulfill the requirements of this paragraph, the Excess or Umbrella insurance must be "follow form" equal or broader in coverage scope than underlying insurance.

C. **Workers Compensation and Employers Liability Insurance: CONTRACTOR** must maintain Workers Compensation insurance to cover obligations imposed by federal and state statutes having jurisdiction of **CONTRACTOR** employees engaged in the performance of Work under this Contract and must also maintain Employers' Liability insurance of not less than $1,000,000 for each accident and $1,000,000 disease for each employee.

D. **Builders' Risk/Installation Floater Insurance:** The **CONTRACTOR** bears all responsibility for loss to all equipment or Work under construction. Unless waived in writing by the City the **CONTRACTOR** will purchase and maintain in force Builders' Risk/Installation Floater insurance on the entire Work until completed and accepted by the City. This insurance will be Special Causes of Loss policy form, (minimally including perils of fire, flood, lightning, explosion, windstorm and hail, smoke, aircraft and vehicles, riot and civil commotion, theft, vandalism, malicious mischief, and collapse), completed value, replacement cost policy form equal to the contract price and all subsequent modifications. The **CONTRACTOR**'s Builders' Risk/Installation Floater insurance must be primary and not contributory.

1. Builders' Risk/Installation Floater insurance must cover the entire Work including reasonable compensation for architects and engineers' services and expenses and other "soft costs" made necessary by an insured loss. Builders' Risk/Installation Floater insurance must provide coverage from the time any covered property comes under the **CONTRACTOR**'s control and or responsibility, and continue without interruption during course of construction, renovation and or installation, including any time during which any project property or equipment is in transit, off site, or while on site for future use or installation. Insured property must include, but not be limited to, scaffolding, false work, and temporary buildings at the site. This insurance must also cover the cost of removing debris, including demolition as may be legally required by operation of any law, ordinance, regulation or code.

2. The **CONTRACTOR** must also purchase and maintain Boiler and Machinery insurance with the same requirements as Builders' Risk/Installation Floater insurance cited above if the Work to be performed involves any exposures or insurable property normally covered under a Boiler and Machinery insurance policy or made necessary as required by law or testing requirements in the performance of this Contract/Agreement. The **CONTRACTOR** will be responsible for any and all deductibles under these policies and the **CONTRACTOR** waives all rights of recovery and subrogation against the City under the **CONTRACTOR**- Builders' Risk/Installation Floater insurance described herein.

3. Builders' Risk/Installation Floater Insurance must be maintained until whichever of the following first occurs: (i) final payment has been made; or, (ii) until no person or entity, other than the City, has an insurable interest in the property required to be covered.

a. The Builders' Risk/Installation Floater insurance must be endorsed so that the insurance will not be canceled or lapse because of any partial use or occupancy by the City.

b. The Builders Risk/Installation Floater insurance must include as named insureds, the City, the **CONTRACTOR**, and all tiers of subcontractors and others with an insurable interest in the Work who will be named as additional insureds unless they are able to provide the same level of coverage with the City and **CONTRACTOR** named as additional insureds. Certificates must contain a provision that the insurance will not be canceled or materially altered without at least 30 days advance notice to the City. The City must also be named as a Loss Payee under the Builders' Risk/Installation Floater coverage.

c. The Builders Risk/Installation Floater insurance must be written using the Special Causes of Loss policy form, replacement cost basis.

d. All rights of subrogation under the Builders Risk/Installation Floater insurance are, by this Contract/Agreement, waived against the City, its officers, officials, agents and employees.

e. The **CONTRACTOR** is responsible for payment of all deductibles under the Builders' Risk/Installation Floater insurance policy.

**3. Additional Policy Provisions Required.**

A. **Self-Insured Retentions Or Deductibles.** Any self-insured retentions and deductibles must be declared and approved by the City. If not approved, the City may require that the insurer reduce or eliminate any deductible or self-insured retentions with respect to the City, its officers, officials, agents, employees, and volunteers.

B. The **CONTRACTOR's** insurance must contain broad form contractual liability coverage.

C. The **CONTRACTOR**'s insurance coverage must be primary insurance with respect to the City, its officers, officials, agents, and employees. Any insurance or self-insurance maintained by the City, its officers, officials, agents, and employees shall be in excess of the coverage provided by the **CONTRACTOR** and must not contribute to it.

D. The **CONTRACTOR**'s insurance must apply separately to each insured against whom claim is made or suit is brought, except with respect to the limits of the insurer's liability.

E. Coverage provided by the **CONTRACTOR** must not be limited to the liability assumed under the indemnification provisions of this Contract

F. The policies must contain a severability of interest clause and waiver of subrogation against the City, its officers, officials, agents, and employees, for losses arising from Work performed by the **CONTRACTOR** for the City.

G. The **CONTRACTOR**, its successors and or assigns, are required to maintain Commercial General Liability insurance as specified in this Contract for a minimum period of 3 years following completion and acceptance of the Work. The **CONTRACTOR** must submit a Certificate of Insurance evidencing Commercial General Liability insurance during this 3 year period containing all the Contract insurance requirements, including naming the required Additional Insureds set forth herein.

H. If a Certificate of Insurance is submitted as verification of coverage, the City will reasonably rely upon the Certificate of Insurance as evidence of coverage but this acceptance and reliance will not waive or alter in any way the insurance requirements or obligations of this Contract.

I. Insurance Cancellation During Term of Contract.

1. If any of the required policies expire during the life of this Contract, the **CONTRACTOR** must forward renewal or replacement Certificates to the City within 10 days after the renewal date containing all the required insurance provisions.

2. Each insurance policy required by the insurance provisions of this Contract shall provide the required coverage and shall not be suspended, voided or canceled except after thirty (30) days prior written notice has been given to the City, except when cancellation is for non-payment of premium, then ten (10) days prior notice may be given. Such notice shall be sent directly to Chandler Law-Risk Management Department, Post Office Box 4008, Mailstop 628, Chandler, Arizona 85225. If any insurance company refuses to provide the require notice, the **CONTRACTOR** or its insurance broker shall notify the City of any cancellation, suspension, non-renewal of any insurance within seven (7) days of receipt of insurers' notification to that effect.

J. **City as Additional Insured**. The above-referenced policies are to contain, or be endorsed to contain, the following provisions:

1. The Commercial General Liability and Automobile Liability policies are to contain, or be endorsed to contain, the following provisions: The City, its officers, officials, agents, and employees are additional insureds with respect to liability arising out of activities performed by, or on behalf of, the **CONTRACTOR** including the City's general supervision of the **CONTRACTOR**; Products and Completed Operations of the **CONTRACTOR**; and automobiles owned, leased, hired, or borrowed by the **CONTRACTOR**.

2. The City, its officers, officials, agents, and employees must be additional insureds to the full limits of liability purchased by the **CONTRACTOR** even if those limits of liability are in excess of those required by this Contract.

## ARTICLE 15 – INDEMNIFICATION:

To the fullest extent permitted by law, **CONTRACTOR**, its successors, assigns and guarantors, shall indemnify and hold harmless City and any of its elected or appointed officials, officers, directors, commissioners, board members, agents or employees from and against any and all allegations, demands, claims, proceedings, suits, actions, damages, including, without limitation, property damage, environmental damages, personal injury and wrongful death claims, losses, expenses (including claim adjusting and handling expenses), penalties and fines (including, but not limited to, attorney fees, court costs, and the cost of appellate proceedings), judgments or obligations, which may be imposed upon or incurred by or asserted against the City by reason of this Contract or the services performed or permissions granted under it, or related to, arising from or out of, or resulting from any negligent or intentional actions, acts, errors, mistakes or omissions caused in whole or part by **CONTRACTOR**, or any of its subcontractors, or anyone directly or indirectly employed by any of them or anyone for whose acts any of them may be liable, relating to the discharge of any duties or the exercise of any rights or privileges arising from or incidental to this Contract, including but not limited to, any injury or damages claimed by any of **CONTRACTOR**'s and subcontractor's employees.

## ARTICLE 16 – MISCELLANEOUS:

16.1 Terms used in this Contract which are defined in the General Conditions, shall have the meanings indicated in the General Conditions.

16.2 The failure of any party to enforce against another party any provision of this Contract shall not constitute a waiver of that party's right to enforce such a provision at a later time, and shall not serve to vary the terms of this Contract.

16.3 CITY and CM@RISK each binds itself, its partners, successors, assigns and legal representatives to the other party hereto, its partners, successors, assigns, and legal representatives in respect to all covenants, agreements, and obligations contained in these Contract Documents.

## ARTICLE 17 – CONFLICT OF INTEREST:

CONTRACTOR stipulates that its officers and employees do not now have a conflict of interest and it further agrees for itself, its officers and its employees that it will not contract for or accept employment for the performance of any work or services with any individual business, corporation or government unit that would create a conflict of interest in the performance of its obligations pursuant to this Contract.

Pursuant to A.R.S. Section 38-511, the City may cancel this contract within three (3) years after its execution without penalty or further obligation by the City if any person significantly involved in initiating, negotiating, securing, drafting or creating the contract on behalf of the City of Chandler is, at any time while the contract is in effect, an employee of any other party to the contract in any capacity or a consultant to any other party of the contract with respect to the subject matter of the contract.

## ARTICLE 18 - TERMINATION WITHOUT CAUSE:

CITY may at any time and for any or no reason, at its convenience, terminate this Contract or any part of the services to be rendered pursuant thereto by ten (10) day written notice to CONTRACTOR specifying the termination date. Immediately after receiving such notice, CONTRACTOR shall discontinue advancing the work under this Contract and shall deliver to CITY all drawings, notes, calculations, sketches and other materials entirely or partially completed, together with all unused materials supplied by CITY.

## ARTICLE 19 – COMPLIANCE WITH ARIZONA STATE PROCUREMENT LAW:

Compliance with A.R.S. § 41-4401. Pursuant to the provisions of A.R.S. § 41-4401, the Contractor hereby warrants to the City that the Contractor and each of its subcontractors ("Subcontractors") will comply with all Federal Immigration laws and regulations that relate to the immigration status of their employees and the requirement to use E-Verify set forth in A.R.S. §23-214(A) (hereinafter "Contractor Immigration Warranty").

A breach of the Contractor Immigration Warranty shall constitute a material breach of this Contract that is subject to penalties up to and including termination of the contract.

The City retains the legal right to inspect the papers of any Contractor or Subcontractor employee who works on this Contract to ensure that the Contractor or Subcontractor is complying with the Contractor Immigration Warranty. The Contractor agrees to assist the City in the conduct of any such inspections. The City may, at its sole discretion, conduct random verifications of the employment records of the Contractor and any Subcontractors to ensure compliance with Contractors Immigration Warranty. The Contractor agrees to assist the City in performing any such random verifications.

The provisions of this Article must be included in any contract the Contractor enters into with any and all of its subcontractors who provide services under this Contract or any subcontract. "Services" are defined as furnishing labor, time or effort in the State of Arizona by a contractor or subcontractor. Services include construction or maintenance of any structure, building or transportation facility or improvement to real property.

IN WITNESS WHEREOF, the parties hereto have executed this Contract on the day and year first written above.

This Contract will be effective on _____ of _____, 2015.

CITY OF CHANDLER

_____
MAYOR Date

ADDRESS FOR NOTICE

City of Chandler
P.O. Box 4008, Mail Stop 407
Chandler, AZ 85244-4008
Phone: 480-782-3307

ATTEST:

_____
City Attorney by: _____

APPROVED AS TO FORM:

_____
City Clerk SEAL

CONSTRUCTION MANAGER AT RISK

By: _____
Signature
Warren France, Vice President
Printed or Typed

ADDRESS FOR NOTICE
8901 E. Mountain View Road, Suite 150
Scottsdale, AZ 85258

ATTEST: If Corporation

Jessica Magowick
Secretary

**Contractor Immigration Warranty**
To Be Completed by Contractor Prior to Execution of Contract

A.R.S. § 41-4401 requires as a condition of your contract verification of compliance by the contractor and subcontractors with the Federal Immigration and Nationality Act (FINA), all other Federal immigration laws and regulations, and A.R.S. § 23-214 related to the immigration status of its employees.

By completing and signing this form and attached Employee Verification Worksheet the contractor shall attest that it and all subcontractors performing work under the cited contract meet all conditions contained herein.

| | | |
|---|---|---|
| **Project Number/Division: WA1504.401 LARGE VALVE REPLACEMENT** | | |
| **Contractor Name (as listed in the contract):** | | |
| **Street Name and Number:** | | |
| **City:** | **State:** | **Zip Code:** |

I hereby attest that:

1. The contractor complies with the Federal Immigration and Nationality Act (FINA), all other Federal immigration laws and regulations, and A.R.S. § 23-214 related to the immigration status of those employees performing work under this contract;

2. All subcontractors performing work under this contract comply with the Federal Immigration and Nationality Act (FINA), all other Federal immigration laws and regulations, and A.R.S. § 23-214 related to the immigration status of their employees; and

3. The contractor has identified all contractor and subcontractor employees who perform work under the contract and has verified compliance with Federal Immigration and Nationality Act (FINA), all other Federal immigration laws and regulations, and A.R.S. § 23-214.

**Signature of Contractor (Employer) or Authorized Designee:**

**Printed Name:** Warren France

**Title:** Vice President

**Date (month/day/year):** 09/10/2015

## EXHIBIT A
## GMP ASSUMPTIONS AND CLARIFICATIONS

### PROJECT DESCRIPTION & SCOPE OF WORK

This project will provide construction services for the replacement of the two highest priority valve locations, near the intersection of McQueen and Pecos Roads. The project scope of work includes dewatering, removal and replacement of 48" Prestressed Concrete Cylinder Pipe (PCCP), installation of 36" Gate Valves, Valve Vaults, 72" Manholes, condition assessment of existing 48" PCCP, chlorination and start up.

### CLARIFICATIONS, ASSUMPTIONS, EXCLUSIONS

- GMP excludes all costs associated with City permit and plan review fees, Quality Assurance (QA) (i.e. inspection and testing) costs, impact fees, and utility company fees and/or any other fees not specifically identified herein.

- Hazardous Materials – GMP excludes any and all costs associated with handling and/or disposing of hazardous wastes.

- Hard Dig – GMP excludes any rock excavation requiring blasting and/or hydraulic breakers of any kind. GMP includes excavation and removal of cobble and/or caliche conditions.

- The following documents were used in the preparation of this GMP:
    - 60% Large Valve Replacement Project No WA1504.401 plans prepared by Dibble Engineering, June 6, 2015.
    - 60% Large Valve Replacement Project No. WA1504.401 Technical Specifications prepared by Dibble Engineering, June 6, 2015
    - Conditions Assessment of 48-in Pipeline Technical Memorandum prepared by Dibble Engineering dated June 5, 2015
    - Shutdown and Dewatering of 48-inch Pipeline in preparation of Large Valve Replacement prepared by Dibble Engineering dated June 5, 2015
    - 60% Comment Resolution Meeting held July 2, 2015 and Notes prepared by Dibble Engineering dated July 14, 2015
    - Chlorination Meeting held July 21, 2015

- Critical Path Model (CPM) schedule shall be provided on or before the effective date of the Construction Contract.

- Substantial completion is defined as completion of all work identified in the Exhibit C 5 Week Schedule

## FEE SCHEDULE ITEM CLARIFICATIONS

| ITEM NO. | DESCRIPTION | CLARIFICATION / ASSUMPTION |
|---|---|---|
| 1 | Mobilization & Demobilization | • Includes equipment Mobilization & Demobilization<br>• Includes pre-construction video, and progress photographs. Project photography and video is for initial documentation upon Notice To Proceed (NTP), construction progress photographs with each month's pay applications, and upon project completion<br>• Includes Low Boy transportation for the gate valves, 48" PCCP for testing and disposal<br>• Includes Runners (once a week)<br>• Lump Sum (LS) measurement and payment |
| 2 | Construction Survey, Staking, As-builts, & GIS Mapping | • Includes all construction survey, staking, and re-staking<br>• Per City's GIS Mapping Requirements<br>• Construction redlines<br>• Registered Land Surveyor Certification of as-builts<br>• Measured and paid on lump sum basis |
| 3 | Dust Control | • Includes dust control for the duration of the project<br>• Includes hydrant meter permit costs for use of City's potable water hydrant at Surface Water Treatment Plant (SWTP) for use as construction water<br>• Measured and paid on lump sum basis |
| 4 | Quality Control & Materials Testing | • Based on standard MAG testing requirements for frequency and type<br>• Price includes Magnetic Particle Testing of all Welded Joints<br>• Hydrostatic test pressure for the 48" PCCP is excluded<br>• Hydrostatic test pressure of all other pipe sizes shall be per MAG<br>• Visual inspection of flanged outlets will conducted inside the vault<br>• For pipes less than 48", backfill shall be no higher than the spring line<br>• Measured and paid on lump sum basis |
| 5 | Chlorination | • By the spray method chlorination and disinfection with 200 ppm NSF sodium hypochlorite<br>• Price includes CCTV inspection, chlorination support, summary report, DVD, of video & screenshots<br>• Shall be performed until passes Bacteria testing<br>• Measured and paid on lump sum basis |
| 6 | Existing Pipe Destruction & Non-Destructive Testing Allowance | • One full pipe stick of 48" Prestressed Concrete Cylinder Pipe (PCCP) at each location shall be salvaged and transported for Destructive Continuity Testing<br>• Includes coordination with Ameron, original supplier, and sub-contractor, a firm specializing in condition assessment<br>• Metallurgy Analysis of Prestressed Wires<br>• Report of Destructive Testing<br>• Non-Destructive - Visual & Sounding Inspection of 1.5 miles of PCCP<br>• Excludes hydrostatic leakage testing<br>• Report of Visual & Sounding<br>• To be paid on actual cost verified with back-up invoicing |

| ITEM NO. | DESCRIPTION | CLARIFICATION / ASSUMPTION |
|---|---|---|
| 7 | Traffic Control | • Variable Message Boards will set up 2 weeks prior to construction and then removed after construction complete<br>• Assume that the 2 previously approved Traffic Control Plans will be used for this work<br>• Includes preparation and updates of Traffic Control Plans (TCP)<br>• Includes installation, maintenance, and removal of barricades in accordance with approved TCP<br>• Includes price for 2 project signs for construction<br>• Excludes any use of jersey barriers<br>• Measured and paid on lump sum basis |
| 8 | Off Duty Police Officer Allowance | • Officers will be used for work at Pecos due to the proximity of the intersection of Pecos & McQueen<br>• Assume no officers needed for work at Fire Station<br>• Per the City Barricade Manual, officers will be used from 6AM to 7PM Monday-Friday and 6AM to 2PM Saturday and Sunday<br>• Rate of $63.18 per hour based on September 12, 2015 City of Chandler officer's rates including officer, patrol car, and workers compensation<br>• Measured and paid on hour (HR) basis, compensation shall be paid on actual hourly rate for officer, car, and workers compensation, as verified with invoice backup |
| 9 | Sweeping | • Includes a PM-10 certified sweeper for 8 hours per week<br>• Measured and paid on hourly basis |
| 10 | Tree Removal | • Removal of 3 existing trees at the Fire Station and SWTP entrance<br>• Trees less than 12" diameter trunks considered incidental and included in other line items<br>• Measured and paid on each basis for trees with trunks diameters over 12" |
| 11 | 5 Gallon Shrubs | • Replacement of existing shrubs of same species/type or Owner approved similar species type and size in the Pecos median<br>• Measured and paid on each basis |
| 12 | 36" Box Tree | • Planting 36" Ash Box trees in Pecos median or similar species type and size as approved by Owner<br>• Measured and paid on each basis |
| 13 | Landscaping & Irrigation Maintenance & Establishment | • City to provide Decomposed Granite to place at Fire Station and Pecos median<br>• Includes cut and cap existing irrigation and reconnection of existing irrigation in median<br>• Price include new Decomposed Granite to place in median<br>• This price includes plant establishment & maintenance in accordance with City standards for period of 3 months<br>• Measured and paid on lump sum basis |

| ITEM NO. | DESCRIPTION | CLARIFICATION / ASSUMPTION |
|---|---|---|
| 14 | Remove & Replace Asphalt | • Price is based on removing existing Asphalt as show on the plans an additional 45 Square Yards (SY) at Dewatering location for removal & replacement<br>• Price is based on asphalt being placed in one single lift for each type of material<br>• 6" of MAG Aggregate Base Course (ABC) will be placed on top of 1/2 Sack Slurry to the pavement section<br>• Asphalt thickness was determined from potholes and excavation /exploration work to be replaced in kind or 5" Asphalt Concrete (AC) on 10" ABC, whichever is greater<br>• 5" AC shall be 3" base course A-19MM and 2" Surface Course A-12.5 MM<br>• Material prices are confirmed through 12-31-2015<br>• Includes haul off and disposal of removed asphalt<br>• Includes tack coat on edges only<br>• Includes saw cutting edge for smoother/cleaner transitions between existing and new<br>• Excludes Slurry Seal of any kind<br>• Measured and paid on square yard basis |
| 15 | Remove & Replace Concrete | • Price is based on quantities removed during excavation/exploration under WA1504.251 contract and an additional 20 Lineal Feet (LF) of Curb & Gutter at the Fire Station location for removal & replacement<br>• Includes haul off and disposal of saw cut concrete<br>• Includes haul off and disposal of damaged bricks and new replacement brick pavers in median<br>• Material prices are confirmed through 12-31-2015<br>• Measured and paid on lump sum basis |
| 16 | Dewatering Existing 48" PCCP | • This pricing is based on Chandler SWTP annual shutting down on November 20th at 6AM and the City valve crews starting to close all Large Valves and Jumper Line valves at 6:01 AM and continuing based on sequential order of the shutdown scenarios from Shutdown and Dewatering Technical Memorandum (Memo) until all valves have been closed adequately to isolate the construction piping area<br>• Dewatering includes pumping of leak-by water, when all possible scenarios of shutdown per Shutdown and Dewatering Technical Memo have been implemented for Scenario 1.<br>• Disposal water shall be pumped from 12" waterline and 8" pump out and discharged into the City's Sewer manhole at Pecos Road and Bedford Road. Dewatering activities shall be coordinated with the City's Airport Water Reclamation Facility (AWRF)<br>• Pricing includes excavation, shoring to expose 12" lateral and 8" Blow Off, and backfill<br>• Pricing includes 12"x8" tapping sleeve, 8" gate valve, and 8" hot tap<br>• Rental pumps and piping for dewatering<br>• Pump & Hole watch 24 hours per day until start of bacteria testing<br>• Excludes the cost and use of line stops<br>• Measured and paid on lump sum basis |

| | | |
|---|---|---|
| 17 | Utility Adjustments | • Includes adjustment of existing and new valves, Manholes in accordance with MAG standards<br>• Measured and paid on each basis |
| 18 | Stripping | • Pricing includes 2 coats of paint per City of Chandler Standards<br>• Measured and paid on lump sum basis |
| 19 | Install Valves & Vault at Fire Station | • Crew work hours Monday through Saturday from 6 AM to 7PM<br>• 36" resilient wedge gate valve shall be provided by Owner/City<br>• Gate valves will be flanged by flanged end and in vertical position<br>• One 36" gate valve will be installed<br>• Includes 72" manhole, bases, and encasement to provide access man ways on either side of valve, that shall be equipped with 2-inch threaded connections with corporation stops<br>• No work on November 26th Thanksgiving Day Except for Pump & Hole Watch<br>• Excavation will be 100% MAG ABC backfill to 1' above pipe and native to subgrade and slope back<br>• Excess spoils will be hauled off site which includes trucking and dump fees<br>• Excludes any over-excavation of any roadway sections<br>• Pipe encasements/manhole bases and vault will be set on compacted native material<br>• Excludes haul off of contaminated/hazardous soil<br>• Includes engineering for manholes, bases & vaults<br>• Includes pipe and fittings<br>• Valve shall be offset inside of vaults to accommodate tie rods<br>• Includes 316 SS nuts and bolts<br>• Existing butterfly valve shall be abandoned in place per MAG Standard Detail 422<br>• Measured and paid on lump sum basis |

| | | |
|---|---|---|
| 20 | Install Valves & Vault at Pecos | • Crew work hours Monday through Saturday from 6 AM to 7PM<br>• 36" resilient wedge gate valve shall be provided by Owner/City<br>• Gate valves will be flanged by flanged end and in vertical position<br>• One 36" gate valve will be installed<br>• Includes 72" manhole, bases, and encasement to provide access man ways on either side of valve, that shall be equipped with 2-inch threaded connections with corporation stops<br>• No work on November 26th Thanksgiving Day Except for Pump & Hole Watch<br>• Excavation will be 100% MAG ABC backfill to 1' above pipe and ½ Sack Slurry to subgrade<br>• Includes shoring<br>• Includes subgrade preparation<br>• Excess spoils will be hauled off site which includes trucking and dump fees<br>• Exclude any over-excavation of any roadway sections<br>• Pipe encasements/manhole bases and vault will be set on compacted native material<br>• Excludes haul off of contaminated/hazardous soil<br>• Includes engineering for manholes, bases & vaults<br>• Includes pipe and fittings<br>• Valve shall be offset inside of vaults to accommodate tie rods<br>• Includes 316 SS nuts and bolt<br>• Existing butterfly valve shall be abandoned in place per MAG Standard Detail 422<br>• Measured and paid on lump sum basis |
| 21 | Delta Drawing Plan Allowance | • Accommodates changes to plans from 60% plans at the time of GMP to Final plans at the time of Construction start<br>• Proposed pricing for changes shall be provided to Owner/City for review and approval prior to construction work<br>• Measured and paid on prior approved line items and their unit of measure or on actual cost basis |
| 22 | Construction Contingency | • For costs not anticipated at time of GMP per Construction Contract Article 8.6 Construction Contingency<br>• Additional work shall be performed using "Equipment Usage Rates" fee scheduled dated 01/14/2015<br>• Additional work shall be performed using "Direct Labor Hourly Rates" fee schedule dated 01/14/2015<br>• Measured and paid on actual cost basis |
| 23 | Owner's Contingency | • For City requested upgrades and changes per Construction Contract Article 8.7 Owner's Contingency<br>• Additional work shall be performed using "Equipment Usage Rates" fee scheduled dated 01/14/2015<br>• Additional work shall be performed using "Direct Labor Hourly Rates" fee schedule dated 01/14/2015<br>• Proposed pricing for requested changes shall be provided to Owner/City for review and approval prior to construction work<br>• Measured and paid on prior approved line items and their unit of measure or on actual cost basis |

| | | |
|---|---|---|
| 24 | General Conditions | • Includes six 7KW generator powered lights and fuel, one storage container, one 40 yard dumpster, two field toilets, drinking water, and construction temporary fencing for 3 locations<br>• Generators shall be amended as necessary for sound attenuation.<br>• Includes 100 hours of Project Manager, 200 hours superintendent, 50 hours for Quality Control Manager, 350 hours for Ford F-150 or Ford Escape vehicle, per "Direct Labor Hourly Rates" and " Equipment Usage Rates" fee schedules dated 01/14/2015 |
| 25 | Overhead and Profit | • 5% Overhead<br>• 5% Profit<br>• Measured and paid on calculation of 10% of Subtotal Direct Costs, less General Conditions, in accordance with City's General Conditions and 2015 MAG 190.5.3 |
| 26 | General Liability, Auto Insurance, Etc. | • Measured and paid on calculation of 1.5% of Subtotal Direct Costs, Indirect, and Fee Costs |
| 27 | General Contractor's Bond | • Measured and paid on calculation of 1.0% of Subtotal Direct Costs, Indirect, and Fee Costs |
| 28 | Sales Tax | • Sales Tax of 5.72% has been calculated based on 65% of 8.8% City of Chandler Sales Tax rate.<br>• Measured and paid on calculation of 5.72% of Subtotal Direct Costs, Indirect, and Fee Costs<br>• Calculation may be adjusted to match actual sales tax incurred, with document for back-up |

**EXHIBIT B**
**GMP**

| Item No. | Description | Qty. | Unit | Unit Cost | Extended Cost |
|---|---|---|---|---|---|
| 1 | Mobilization & Demobilization | 1 | LS | $19,068.87 | $19,068.87 |
| 2 | Construction Survey, Staking, As-builts, & GIS Mapping | 1 | LS | $8,900.01 | $8,900.01 |
| 3 | Dust Control | 1 | LS | $32,139.25 | $32,139.25 |
| 4 | Quality Control & Testing | 1 | LS | $4,985.00 | $4,985.00 |
| 5 | Chlorination | 1 | LS | $21,000.02 | $21,000.02 |
| 6 | Existing Pipe Destructive & Non-Destructive Testing Allowance | 1 | AL | $21,500.02 | $21,500.02 |
| 7 | Traffic Control | 1 | LS | $32,059.14 | $32,059.14 |
| 8 | Off Duty Police Officer | 258 | HR | $63.18 | $16,300.44 |
| 9 | Sweeping | 40 | HR | $90.00 | $3,600.00 |
| 10 | Tree Removal | 3 | EA | $610.00 | $1,830.00 |
| 11 | 5 Gallon Shrubs | 12 | EA | $60.00 | $720.00 |
| 12 | 36" Box Tree | 2 | EA | $750.00 | $1,500.00 |
| 13 | Landscaping & Irrigation Maintenance & Establishment | 1 | LS | $725.00 | $725.00 |
| 14 | Remove & Replace Asphalt | 152 | SY | $105.47 | $16,031.44 |
| 15 | Remove & Replace Concrete | 1 | LS | $9,973.71 | $9,973.71 |
| 16 | Dewater Existing 48" PCCP | 1 | LS | $40,228.99 | $40,228.99 |
| 17 | Utility Adjustments | 20 | EA | $400.00 | $8,000.00 |
| 18 | Striping | 1 | LS | $2,500.00 | $2,500.00 |
| 19 | Install Valves & Vault at Fire Station | 1 | LS | $210,016.43 | $210,016.43 |
| 20 | Install Valves & Vault at Pecos | 1 | LS | $224,983.59 | $224,983.59 |
| | **Subtotal Direct Costs Without Contingencies** | | | | **$676,061.91** |
| 21 | Delta Drawing Plan Allowance | 1 | AL | $50,000.00 | $50,000.00 |
| 22 | Construction Contingency | 1 | AL | $100,000.00 | $100,000.00 |
| 23 | Owner's Contingency | 1 | AL | $100,000.00 | $100,000.00 |
| | **Subtotal Contingencies** | | | | **$250,000.00** |
| | **Subtotal Direct Costs** | | | | **$926,061.91** |
| 24 | General Conditions | 1 | LS | $48,236.54 | $48,236.54 |
| | **Subtotal Indirect Costs** | | | | **$48,236.54** |
| | **Subtotal Direct and Indirect Costs** | | | | **$974,298.45** |
| 25 | Overhead and Profit | 10 | % | $92,606.19 | $92,606.19 |
| | **Subtotal Fee** | | | | **$92,606.19** |
| | **Subtotal Direct, Indirect, and Fee Costs** | | | | **$1,066,904.64** |
| 26 | General Liability, Auto Insurance, Etc. | 1.5 | % | $16,003.57 | $16,003.57 |
| 27 | General Contractors Bond | 1.0 | % | $10,669.05 | $10,669.05 |
| 28 | Sales Tax | 5.72 | % | $61,026.95 | $61,026.95 |
| | **Total Budget** | | | | **$1,154,604.20** |

# EXHIBIT C
# 5 WEEK SCHEDULE

| Area/Description | Mon | Tue | Wed | Thur | Fri | Sat | Sun | Mon | Tue | Wed | Thur | Fri | Sat | Sun | Mon | Tue | Wed | Thur | Fri | Sat | Sun | Mon | Tue | Wed | Thur | Fri | Sat | Sun | Mon | Tue | Wed | Thur | Fri | Sat | Sun |
|---|---|---|---|---|---|---|---|---|---|---|---|---|---|---|---|---|---|---|---|---|---|---|---|---|---|---|---|---|---|---|---|---|---|---|---|
| | 11/16 | 11/17 | 11/18 | 11/19 | 11/20 | 11/21 | 11/22 | 11/23 | 11/24 | 11/25 | 11/26 | 11/27 | 11/28 | 11/29 | 11/30 | 12/1 | 12/2 | 12/3 | 12/4 | 12/5 | 12/6 | 12/7 | 12/8 | 12/9 | 12/10 | 12/11 | 12/12 | 12/13 | 12/14 | 12/15 | 12/16 | 12/17 | 12/18 | 12/19 | 12/20 |
| Message Boards 2 Weeks Prior | | | | | | | | | | | | | | | | | | | | | | | | | | | | | | | | | | | |
| Survey / Mobilization | X | X | X | X | X | | | | | | | | | | | | | | | | | | | | | | | | | | | | | | |
| **Traffic Control Phase 1** | | | | | X | X | X | X | X | X | X | X | X | X | X | X | X | X | X | X | X | X | X | X | X | | | | | | | | | | |
| Excavation at Fire Station | | | | | | X | | X | | | | | | | | | | | | | | | | | | | | | | | | | | | |
| Excavation & Shoring at Pecos Road | | | | | X | X | | X | | | | | | | | | | | | | | | | | | | | | | | | | | | |
| Excavation for 8" Pump Out & Hot Tap 12" | | | | | X | X | | | | | | | | | | | | | | | | | | | | | | | | | | | | | |
| COC Shuts Down SWTP | | | | | X | | | | | | | | | | | | | | | | | | | | | | | | | | | | | | |
| COC Crews Shut Down the 7 Valves | | | | | X | | | | | | | | | | | | | | | | | | | | | | | | | | | | | | |
| Dewatering from 8" PO and 8" Hot Tap, Pump & Hole Watch | | | | | X | X | X | X | X | X | X | X | X | X | X | X | X | X | | | | | | | | | | | | | | | | | |
| Start to Demo 48" & Salvage 48" PCCP FS & PR | | | | | | X | | X | X | | | | | | | | | | | | | | | | | | | | | | | | | | |
| Excavate and Fine Grade for Pipe, MH's, & Vault FS | | | | | | | | | X | X | | | | | | | | | | | | | | | | | | | | | | | | | |
| Excavate and Fine Grade for Pipe, MH's, & Vault PR | | | | | | | | | | X | | X | | | | | | | | | | | | | | | | | | | | | | | |
| Install Vault, 48" & 36" Pipe & Valve FS | | | | | | | | | | X | | X | X | | X | | | | | | | | | | | | | | | | | | | | |
| Welding FS & PR & MAG Particle Testing | | | | | | | | | | | | X | X | | X | X | | | | | | | | | | | | | | | | | | | |
| Install Vault, 48" & 36" Pipe & Valve PR | | | | | | | | | | | | X | X | | X | X | | | | | | | | | | | | | | | | | | | |
| Form, Set Rebar, Pour Encasements & MH Bases FS | | | | | | | | | | | | | X | | X | X | | | | | | | | | | | | | | | | | | | |
| Form, Set Rebar, Pour Encasements & MH Bases PR | | | | | | | | | | | | | | | X | X | X | | | | | | | | | | | | | | | | | | |
| PCCP NON Destructive Testing Visual & Sounding | | | | | | | | | | | | | | | X | X | | | | | | | | | | | | | | | | | | | |
| Install 6" Bypas, Valves, Air/Vac & DeH2O Stand Pipe FS | | | | | | | | | | | | | | | X | X | X | | | | | | | | | | | | | | | | | | |
| Install 6" Bypas, Valves, Air/Vac & DeH2O Stand Pipe PR | | | | | | | | | | | | | | | X | X | | | | | | | | | | | | | | | | | | | |
| Chlorination of All Pipe | | | | | | | | | | | | | | | | X | X | | | | | | | | | | | | | | | | | | |
| COC Turns on 12" to Start Filling PCCP | | | | | | | | | | | | | | | | | X | X | | | | | | | | | | | | | | | | | |
| COC Start Bacteria Testing | | | | | | | | | | | | | | | | | | X | X | X | | | | | | | | | | | | | | | |
| Place ABC in Pipe Zone, & Slurry Dewatering Area | | | | | | | | | | | | | | | | | | X | X | X | | | | | | | | | | | | | | | |
| COC & Dibble Visual Inspection FS & PR | | | | | | | | | | | | | | | | | | X | | | | | | | | | | | | | | | | | |
| Place ABC in Pipe Zone Slurry, Stack MH's & Vaults PR | | | | | | | | | | | | | | | | | | X | X | X | | | | | | | | | | | | | | | |
| Place ABC in Pipe Zone & BF Native, Stack MH's & Vaults FS | | | | | | | | | | | | | | | | | | X | X | X | | | | | | | | | | | | | | | |
| Pour Back Curb & Median PR | | | | | | | | | | | | | | | | | | | | | | X | X | | | | | | | | | | | | |
| Pour Back Curb & Gutter, Final Adjustments FS | | | | | | | | | | | | | | | | | | | | | | | | X | X | | | | | | | | | | |
| Landscaping & Final Cleanup FS | | | | | | | | | | | | | | | | | | | | | | | | | | X | X | | | | | | | | |
| Place ABC & Asphalt Patching | | | | | | | | | | | | | | | | | | | | | | | X | X | | | | | | | | | | | |
| Final Adjustments for MH's & Valves on PR | | | | | | | | | | | | | | | | | | | | | | | | X | X | | | | | | | | | | |
| Landscaping, Plant Trees, Irrigation, Brick Pavers | | | | | | | | | | | | | | | | | | | | | | | X | X | X | | | | | | | | | | |
| Final Cleanup & Sweeping PR | | | | | | | | | | | | | | | | | | | | | | | | | X | | | | | | | | | | |
| **Traffic Control Phase 2 (Right Lane Closed East Bound)** | | | | | | | | | | | | | | | | | | | | | | | | | | X | X | X | X | X | X | X | X | X | |
| Install Remainder of 6" & Blow Off & Test South of PR | | | | | | | | | | | | | | | | | | | | | | | | | | X | X | | | | | | | | |
| Place ABC in Pipe Zone, & Slurry | | | | | | | | | | | | | | | | | | | | | | | | | | | X | | X | | | | | | |
| Pour Back Curb, Gutter, Sidewalk & Adjustment PR | | | | | | | | | | | | | | | | | | | | | | | | | | | | | X | X | | | | | |
| Place ABC & Asphalt Patching PR | | | | | | | | | | | | | | | | | | | | | | | | | | | | | | X | | | | | |
| Final Cleanup & Sweeping | | | | | | | | | | | | | | | | | | | | | | | | | | | | | | | | | | | |
| Final Striping | | | | | | | | | | | | | | | | | | | | | | | | | | | | | | | X | | | | |

# EXHIBIT D
# PERFORMANCE BOND

ARIZONA STATUTORY PERFORMANCE BOND
PURSUANT TO TITLES 28, 34, AND 41, ARIZONA REVISED STATUTES
(Penalty of this bond must be 100% of the Contract amount)

**KNOW ALL MEN BY THESE PRESENTS THAT:**_____

(hereinafter "Principal"), and _____ (hereinafter "Surety"), a corporation organized and existing under the laws of the State of _____ with its principal office in the City of _____, holding a certificate of authority to transact surety business in Arizona issued by the Director of Insurance pursuant to Title 20, Chapter 2, Article 1, as Surety, are held and firmly bound unto _____(hereinafter "Obligee") in the amount of _____ (Dollars) ($_____), for the payment whereof, Principal and Surety bind themselves, and their heirs, administrators, executors, successors and assigns, jointly and severally, firmly by these presents.

WHEREAS, the Principal has entered into a certain written contract with the Obligee, dated

the _____ day of _____, 2015 for construction of **LARGE VALVE REPLACEMENT CITY PROJECT NO. WA1504.401** which contract is hereby referred to and made a part hereof as fully and to the same extent as if copies at length herein.

NOW, THEREFORE, THE CONDITION OF THIS OBLIGATION IS SUCH, that if the Principal faithfully performs and fulfills all the undertakings, covenants, terms, conditions and agreements of the contract during the original term of the contract and any extension of the contract, with or without notice of the Surety, and during the life of any guaranty required under the contract, and also performs and fulfills all the undertakings, covenants, terms, conditions, and agreements of all duly authorized modifications of the contract that may hereafter be made, notice of which modifications to the Surety being hereby waived, the above obligation is void. Otherwise it remains in full force and effect.

PROVIDED, HOWEVER that this bond is executed pursuant to the provisions of Title 34, Chapter 2, Article 2, Arizona Revised Statutes, and all liabilities on this bond shall be determined in accordance with the provisions of Title 34, Chapter 2, Article 2, Arizona Revised Statutes, to the same extent as if it were copied at length in this Contract.

The prevailing party in a suit on this bond shall recover as part of the judgment reasonable attorney fees that may be fixed by a judge of the court.

Witness our hands this _____ day of _____, 2015.

_____
PRINCIPAL SEAL

_____
AGENT OF RECORD

By _____

_____
SURETY SEAL

_____
AGENT ADDRESS

# EXHIBIT E
# PAYMENT BOND

ARIZONA STATUTORY PAYMENT BOND
PURSUANT TO TITLES 28, 34, AND 41, OF THE ARIZONA REVISED STATUTES
(Penalty of this Bond must be 100% of the Contract amount)

**KNOW ALL MEN BY THESE PRESENTS THAT:**_____

(hereinafter "Principal"), as Principal, and _____(hereinafter "Surety"), a corporation organized and existing under the laws of the State of _____ with its principal office in the City of _____, holding a certificate of authority to transact surety business in Arizona issued by the Director of the Department of Insurance pursuant to Title 20, Chapter 2, Article 1, as Surety, are held and firmly bound unto _____ (hereinafter "Obligee") in the amount of _____ (Dollars) ($_____), for the payment whereof, the Principal and Surety bind themselves, and their heirs, administrators, executors, successors and assigns, jointly and severally, firmly by these presents.

WHEREAS, the Principal has entered into a certain written contract with the Obligee, dated the _____ day of _____, 2015 for construction of LARGE VALVE REPLACEMENT **CITY PROJECT NO.: WA1504.401** which contract is hereby referred to and made a part hereof as fully and to the same extent as if copied at length herein.

NOW, THEREFORE, THE CONDITION OF THIS OBLIGATION IS SUCH, that if the Principal promptly pays all moneys due to all persons supplying labor or materials to the Principal or the Principal's subcontractors in the prosecution of the work provided for in said contract, this obligation is void. Otherwise it remains in full force and effect.

PROVIDED, HOWEVER that this bond is executed pursuant to the provisions of Title 34, Chapter 2, Article 2 Arizona Revised Statutes, and all liabilities on this bond shall be determined in accordance with the provisions, conditions and limitations of Title 34, Chapter 2, Article 2, Arizona Revised Statutes, to the same extent as if it were copied at length in this Contract.

The prevailing party in a suit on this bond shall recover as part of the judgment reasonable attorney fees that may be fixed by a judge of the court.

Witness our hands this _____ day of _____, 2015.

_____
PRINCIPAL SEAL

_____
AGENT OF RECORD

By _____

_____
SURETY SEAL

_____
AGENT ADDRESS

# CITY OF CHANDLER, ARIZONA

# CERTIFICATE OF INSURABILITY

## CITY OF CHANDLER PRIVILEGE TAX LICENSE

(Refer to Article 6.9, General Conditions; CONTRACTOR'S RESPONSIBILITIES)

**PROJECT NAME: LARGE VALVE REPLACEMENT**

**PROJECT NUMBER: WA1504.401**

Please attach current certificate per Article 6.9 General Conditions.

**CITY OF CHANDLER, ARIZONA**
**DEPARTMENT OF PUBLIC WORKS**

## CONTRACTOR'S AFFIDAVIT REGARDING SETTLEMENT OF CLAIMS

_____, Arizona

Date _____

**Project Name:** **LARGE VALVE REPLACEMENT**
**Project No.:** **WA1504.401**

To the City of Chandler, Arizona

Gentlemen:

This is to certify that all lawful claims for materials, rental of equipment and labor used in connection with the construction of the above project, whether by subcontractor or claimant in person, have been duly discharged.

The undersigned, for the consideration of $_____, as set out in the final pay estimate, as full and complete payment under the terms of the contract, hereby waives and relinquishes any and all further claims or right of lien under, in connection with, or as a result of the above described project. The undersigned further agrees to indemnify and save harmless the City of Chandler against any and all liens, claims or liens, suits, actions, damages, charges and expenses whatsoever, which said City may suffer arising out of the failure of the undersigned to pay for all labor performances and materials furnished for the performance of said installation.

Signed and dated at _____, this _____ day of _____ 20_____.

_____
CONTRACTOR

By _____

STATE OF ARIZONA )
) SS
COUNTY OF MARICOPA )

The foregoing instrument was subscribed and sworn to before me this _____ day of _____ 20 _____.

_____
Notary Public

_____
My Commission Expires

**CITY OF CHANDLER, ARIZONA**
**PUBLIC WORKS DEPARTMENT**

**CERTIFICATE OF COMPLETION**

**Project Name:** **LARGE VALVE REPLACEMENT**
**Project No.:** **WA1504.401**

(TO BE COMPLETED BY CONTRACTOR)

I HEREBY CERTIFY THAT ALL GOODS AND/OR SERVICES REQUIRED BY CITY OF CHANDLER PROJECT NO. WA1504.401 HAVE BEEN DELIVERED IN ACCORDANCE WITH THE CONTRACT DOCUMENTS AND BID SPECIFICATIONS AND ALL ACTIVITIES REQUIRED BY THE CONTRACTOR UNDER THE CONTRACT HAVE BEEN COMPLETED AS OF _____.
(Date)

FIRM NAME: _____

PRINCIPAL: _____
(Name)

_____
**(Signature)**

_____ DATE: _____
(Title)

CERTIFIED BY ENGINEER/CONSULTANT:

_____ DATE: _____
**(Signature)**

_____
(Firm Name)

---

**PROJECT ACCEPTED BY USER DEPARTMENT**

_____ DATE: _____
**(Signature)**

_____
(Dept./Div.)

_____ Date of Final Walk-Through

_____ Date As-Built Received

_____ City As-Built Number

# GENERAL CONDITIONS

**ARTICLE 1 - DEFINITIONS ..... 1**

**ARTICLE 2 - PRELIMINARY MATTERS ..... 4**

2.1 Delivery of Bonds, Insurance Certificates and Preliminary Schedule ..... 4
2.2 Copies of Documents ..... 4
2.3 Commencement of Contract Time/Notice to Proceed ..... 4
2.4 Contractor Review of Contract Documents. ..... 4
2.5 Starting the Project ..... 5
2.6 Construction Progress Schedule ..... 5
2.7 Other Submittals ..... 6
2.8 Pre-Construction Conference ..... 7

**ARTICLE 3 - CONTRACT DOCUMENTS: INTENT AND REUSE ..... 7**

3.1 Contract Documents ..... 7
3.2 Intent ..... 8
3.3 Reference Standards ..... 8
3.4 Reporting and Resolving Discrepancies ..... 8
3.5 Re-Use of Documents ..... 9

**ARTICLE 4 - AVAILABILITY OF LANDS; PHYSICAL CONDITIONS; REFERENCE POINTS ..... 9**

4.1 Availability of Lands ..... 9
4.2 Physical Conditions, Investigations and Reports ..... 10
4.3 Differing Subsurface or Physical Conditions; Underground Facilities ..... 10
4.4 Reference Points ..... 10
4.5 Hazardous Environmental Conditions ..... 11

**ARTICLE 5 – PERFORMANCE AND PAYMENT BONDS ..... 11**

**ARTICLE 6 - CONTRACTOR'S RESPONSIBILITIES ..... 12**

6.1 Supervision and Superintendence ..... 12
6.2 Labor, Materials and Equipment ..... 13
6.3 Substitutes and “Or-Equals” ..... 14
6.4 Conformity with Contract Documents and Allowable Deviations ..... 14
6.5 Concerning Subcontractors ..... 15
6.6 Patent Fees And Royalties ..... 15
6.7 Permits ..... 16
6.8 Laws and Regulations, and Government Policies ..... 16
6.10 Use of Premises ..... 17
6.11 Record Documents ..... 17
6.12 Safety and Protection ..... 17
6.13 Emergencies ..... 18

6.14 Shop Drawings and Samples ..... 18
6.15 Continuing the Work ..... 19
6.16 Progress Schedule ..... 19
6.17 Errors or Discrepancies Noted by Contractor ..... 20
6.18 Contractor's General Warranty and Guarantee ..... 20
6.19 Reimbursement For Additional Project Designer Services ..... 20

**ARTICLE 7 COOPERATION WITH OTHERS: ..... 21**

7.1 Contractor Responsible to Resolve Conflicts ..... 21
7.2 Notifications Requirement in the Event of Any Damage to or Dislocation of Underground Facilities ..... 21
7.3 Cooperation Between Contractors ..... 21

**ARTICLE 8 - STATUS OF CITY'S REP AND THE PROJECT DESIGNER DURING CONSTRUCTION ..... 22**

8.1 City's Representative ..... 22
8.2 The Project Designer ..... 24
8.3 Contractor's Contact For All Communication ..... 25
8.4 Rejecting Defective Work ..... 25
8.5 Limitations on Responsibilities of the Project Designer and/or CITY REP ..... 25

**ARTICLE 9 – CONDITIONS OF THE SITE ..... 26**

9.1 Dust Control ..... 26
9.2 Clean Up ..... 26
9.3 Repair of landscaped areas and Re-Seeding of Seeded Areas ..... 26
9.4 Traffic Control ..... 27
9.5 Property, Rights in Materials ..... 27
9.6 Access ..... 27
9.7 Notification of Property Owners ..... 27
9.8 Construction Signs ..... 27
9.9 Water for Construction Purposes ..... 27
9.10 Relocation of Existing Water Meters ..... 28
9.11 Water Turn-On or Turn-Off ..... 28

**ARTICLE 10 – CONSTRUCTION PHOTOGRAPHS ..... 28**

10.1 Pre-construction Video ..... 28
10.2 Ground Level Construction Photographs ..... 28
10.3 Aerial Construction Photographs ..... 29
10.4 Procedures ..... 30

**ARTICLE 11 - CHANGES IN THE WORK ..... 30**

11.1 Field Orders ..... 30
11.2 Change Order at City's Request ..... 30
11.3 No Payment Without Written Authorization ..... 31
11.4 No Change Order for Adjusted Quantities ..... 31

11.5 Notice on Bond ..... 31

**ARTICLE 12 - CHANGE OF CONTRACT PRICE ..... 31**

12.1 Written Document Required to Change ..... 31
12.2 Value of Work ..... 32
12.3 Work Verification ..... 32
12.4 Cost of the Work ..... 32
12.5 Contractor's Fee ..... 35
12.6 Cash Allowances ..... 36
12.7 Hindrances and delays ..... 36

**ARTICLE 13 - CHANGE OF THE CONTRACT TIMES ..... 36**

13.1 Written Document Required ..... 36
13.2 Delays Beyond Contractor's Control ..... 37
13.3 Delays Within Contractor's Control ..... 37
13.4 Delays Beyond City's and Contractor's Control ..... 37
13.5 Rain ..... 37

**ARTICLE 14 - WARRANTY AND GUARANTEE; TESTS AND INSPECTIONS; CORRECTION, REMOVAL OR ACCEPTANCE OF DEFECTIVE WORK ... 38**

14.1 Notice of Defects ..... 38
14.2 Access to Work ..... 38
14.3 Tests and Inspections ..... 38
14.4 Uncovering Work ..... 38
14.5 City May Stop the Work ..... 39
14.6 Correction or Removal of Defective Work ..... 39
14.7 Correction Period - One Year Guarantee ..... 39
14.8 Acceptance of Defective Work ..... 40
14.9 City May Correct Defective Work ..... 40
14.10 Correction or Removal of Unauthorized Work ..... 41

**ARTICLE 15 - PAYMENTS TO CONTRACTOR AND COMPLETION ..... 41**

15.1 Schedule of Values ..... 41
15.2 Application for Progress Payment ..... 41
15.3 Contractor's Warranty of Title ..... 41
15.4 Review of Applications for Progress Payments ..... 42
15.5 Substantial Completion ..... 43
15.6 Partial Utilization ..... 43
15.7 Final Inspection ..... 44
15.8 Final Application for Payment ..... 44
15.9 Final Payment and Acceptance ..... 44
15.10 Contractor's Continuing Obligation ..... 45
15.11 Waiver of Claims ..... 45
15.12 City's Right to Withhold Certain Amounts and Make Application Thereof .. 45

**ARTICLE 16- SUSPENSION OF WORK AND TERMINATION ..... 46**

16.1 City May Suspend Work ..... 46
16.2 City May Terminate ..... 46
16.3 Contractor May Stop Work or Terminate ..... 48

**ARTICLE 17– ALTERNATE DISPUTE RESOLUTION ..... 48**

17.1 Notice Required ..... 48
17.2 Decision of Project Designer on Disagreements ..... 48
17.3 Neutral Evaluator, Arbitrators ..... 49
17.4 Neutral Evaluation Process ..... 49
17.5 Binding Arbitration Procedure ..... 49

**ARTICLE 18 - VALUE ENGINEERING ..... 52**

18.1 General ..... 52
18.2 Proposal Requirements ..... 52
18.3 Review and Response ..... 53
18.4 Acceptance ..... 53

**ARTICLE 19 -- GENERAL PROVISIONS ..... 54**

19.1 Partial Invalidity ..... 54
19.2 Attorneys' Fees ..... 54
19.3 Waiver of Rights ..... 54
19.4 Giving Notice ..... 54
19.5 Computation of Time ..... 54
19.6 Conflict of Interest ..... 55
19.7 Assignment ..... 55
19.8 Notice of Injury ..... 55

## ARTICLE 1 - DEFINITIONS

Wherever used in these General Conditions or in the other Contract Documents, the following terms have the meanings indicated which are applicable to both the singular and plural thereof:

**1.1** Addenda: Written or graphic instruments issued prior to the opening of Bids which clarify, correct, or change, the bidding Documents or the Contract Documents.

**1.2** Agreement: same as Contract.

**1.3** Application for Payment: The form prepared by and acceptable to CITY which must be used by CONTRACTOR to request progress or final payments and which must include supporting documentation such as updated Construction Progress Schedule as required by the Contract Documents.

**1.4** Architect: The person, firm or corporation, including their representatives, retained by CITY to design and engineer the project, to draft specifications, plans and perform other project design functions. The Architect will generally be referred to as the Project Designer in these General Conditions.

**1.5** Change Order: A written order to CONTRACTOR signed by CITY and agreed to in writing by CONTRACTOR, authorizing an addition, deletion or revision in the Work and/or a change in the Contract Price or the Contract Times, issued on or after the Effective Date of the Contract. A Change Order is the only mechanism for adjusting the Contract Price or the Contract Time of the Contract.

**1.6** CITY: The City of Chandler, OWNER of the project.

**1.7** City Engineer: The person named as such by the City of Chandler.

**1.8** CITY REPRESENTATIVE: The person or firm authorized by the CITY to represent it during the performance of the Work by the CONTRACTOR; who is CONTRACTOR'S point of contact for the CITY. The CITY REPRESENTATIVE is also known as and may sometimes be referred to as CITY REP, the Engineer, Resident Engineer, or the Onsite Resident Project Representative.

**1.9** Construction Progress Schedule: Sometimes referred to as the Work Schedule, is the schedule prepared and submitted by CONTRACTOR which tracks the progress of the Work as more fully explained and defined herein.

**1.10** Contract: The entire and integrated written agreement, including all the Contract Documents, between the CITY and CONTRACTOR concerning the Work. The Contract supersedes prior negotiations, representations, or agreements, whether written or oral.

**1.11** Contract Documents: The Contract Documents are those documents listed in paragraph 3.1 herein.

**1.12** Contract Price: The moneys payable by CITY to CONTRACTOR for completion of the Work in accordance with the Contract Documents as stated in the Contract (subject to the provisions of Paragraph 1.41 in the case of Unit Price Work).

**1.13** Contract Time: The number of days or the date stated in the Contract to: (i) achieve Substantial Completion; (ii) to complete the Work through any designated milestones; and (iii) to complete the Work so that it is ready for final payment as evidenced by the written recommendation of the CITY REP for final payment.

**1.14** CONTRACTOR: The person, firm or corporation with whom CITY has entered into the Contract. Whenever the Project is to be constructed under multiple direct contracts, the term "CONTRACTOR" shall mean the appropriate prime CONTRACTOR. Whenever a specific prime CONTRACTOR is referred to, terms such as "General CONTRACTOR", "Electrical CONTRACTOR", etc., will be used.

**1.15** Day: A calendar day of twenty-four hours measured from midnight to the next midnight.

**1.16** Drawings: That part of the Contract Documents prepared by the Project Designer which graphically shows the character, intent and scope of the Work to be performed by CONTRACTOR. Shop Drawings and other CONTRACTOR submittals are not Drawings as so defined.

**1.17** Effective Date of the Contract: The date indicated in the Contract on which it becomes effective, but if no such date is indicated, it means the date on which the Contract is signed and delivered by the last of the two parties to sign and deliver.

**1.18** Engineer: The person, firm or corporation, including their representatives, retained by CITY to design and engineer the project, to draft specifications, plans and perform other project design functions. The engineer will generally be referred to as the Project Designer in these General Conditions.

**1.19** Field Order: A written order issued by CITY REP which requires CONTRACTOR to perform minor changes in the Work, but which does not involve a change in the Contract Price or the Contract Times.

**1.20** General Requirements: Sections of Division 1 of the Specifications. The General Requirements pertain to all sections of the Specifications.

**1.21** MAG Standard Specifications: The Uniform Standard Specifications for Public Works Construction sponsored and distributed by the Maricopa Association of Governments (MAG), latest edition in effect at the time of Bid Opening.

**1.22** MAG Standard Details: The Uniform Standard Details for Public Works Construction sponsored and distributed by the Maricopa Association of Governments (MAG), latest edition in effect at the time of the Bid Opening.

**1.23** Milestone: A principal event specified in the Contract Documents relating to an intermediate completion date or time prior to Substantial Completion of all the Work.

**1.24** Modifications:

a) A written amendment of the Contract Documents signed by both parties.
b) A Change Order.
c) A Field Order.

A Modification may only be issued after the Effective Date of the Contract.

**1.25** Notice of Award: The written notice by CITY to the apparent successful Bidder stating that upon compliance by the apparent successful Bidder with the conditions precedent enumerated therein, within the time specified, CITY will sign the Contract.

**1.26** Notice to Proceed: A written notice given by CITY to CONTRACTOR fixing the date on which the Contract Time will commence to run and on which CONTRACTOR shall start to perform their obligations under the Contract Documents.

**1.27** Plans: Same as Drawings.

**1.28** Project: The total construction of which the Work to be provided under the Contract Documents may be the whole or a part as indicated elsewhere in the Contract Documents.

**1.29** Project Designer: The person, firm or corporation retained by CITY to design and engineer the project, to draft specifications, plans and perform other project design functions. References in the Contract Documents to the Project Designer, Architect, Design Engineer or Engineer, all generally mean the Project Designer.

**1.30** RFI: Request for Information. Document submitted by the general contractor to the CITY REP requesting additional information regarding project plans and specifications..

**1.31** Samples: Physical examples furnished by the CONTRACTOR to illustrate materials, equipment or workmanship, and to establish standards by which some portions of the Work will be judged.

**1.32** Schedule of Values: A list prepared by CONTRACTOR showing the Work divided into component parts including quantities and unit prices aggregating the Contract Price and showing the anticipated monthly progress payment amounts that will become due.

**1.33** Shop Drawings: All drawings, diagrams, illustrations, schedules and other data which are specifically prepared by or for CONTRACTOR to illustrate some portion of the Work and all illustrations, brochures, standard schedules, performance charts, instructions, diagrams and other information prepared by a manufacturer, fabricator, supplier or distributor and submitted by CONTRACTOR to illustrate material or equipment for some portion of the Work.

**1.34** Special Provisions: Same as Supplementary (Special) Conditions.

**1.35** Specifications: That part of the Contract Documents consisting of written technical descriptions of materials, equipment, construction systems, standards and workmanship as applied to the Work and certain administrative details applicable thereto.

**1.36** Subcontractor: An individual, firm or corporation having a direct contract with CONTRACTOR or with any other Subcontractor for the performance of a part of the Work at the site.

**1.37** Substantial Completion: The time at which the Work (or specified part thereof) has progressed to the point where, in the opinion of the CITY REP, the Work (or specified part thereof) is sufficiently complete, in accordance with Contract Documents, so that the Work (or specified part thereof) can be utilized for the purposes for which it was intended. The terms “beneficial occupancy”/ ”beneficial use” are sometimes used for Substantial Completion.

**1.38** Supplementary Conditions: That part of the Contract Documents which amends or supplements these General Conditions sometimes referred to as Special Conditions.

**1.39** Supplier: A manufacturer, fabricator, supplier, distributor, materialman, or vendor having a direct contract with CONTRACTOR or with any Subcontractor to furnish materials or equipment to be incorporated in the Work by CONTRACTOR or any Subcontractor.

**1.40** Underground Facilities: All underground pipelines, conduits, ducts, cables, fiber optic facilities, wires, manholes, vaults, tanks, tunnels, or other such facilities or attachments, and any encasements containing such facilities, including but not limited to those that convey electricity, gases, steam, liquid petroleum products, telephone or other communications, cable television, water, wastewater, storm water, other liquids or chemicals, or traffic or other control systems.

**1.41** Unit Price Work: Work to be paid for on the basis of unit prices.

**1.42** Warranty Period: One year from date of Final Acceptance (not Substantial Completion).

**1.43** Work: The entire completed construction or the various separately identifiable parts thereof required to be furnished under the Contract Documents including any and all obligations, duties and responsibilities necessary to complete the construction assigned to, or undertaken by, the CONTRACTOR pursuant to the Contract Documents. Work is the result of performing services, furnishing labor and furnishing and incorporating materials and equipment into the construction, all as required by the Contract Documents.

**1.44** Work Change Directive: Sometimes referred to as a Construction Change Directive. A written order to CONTRACTOR issued on or after the Effective date of the Contract and signed by CITY, ordering an addition, deletion, or revision in the Work, or responding to differing or unforeseen subsurface or physical conditions under which the Work is to be performed or to emergencies. A Work Change Directive may not change the Contract Price or the Contract Times, but is evidence that if appropriate, the change ordered or documented by a Work Change Directive may be converted to a Change Order following negotiations by the parties as to its effect, if any, on the Contract Price or Contract Times.

**1.45** Utility: Same as underground facility.

## ARTICLE 2 - PRELIMINARY MATTERS

### 2.1 Delivery of Bonds, Insurance Certificates and Preliminary Schedule

A. Within ten days of Notice of Award, CONTRACTOR shall execute the Contract and deliver it together with those items listed below to CITY.

B. When CONTRACTOR delivers the executed Contract to CITY, CONTRACTOR shall also deliver to CITY such Bonds and certificates of insurance with endorsements (and other evidence of insurance requested by CITY) as CONTRACTOR may be required to furnish.

C. As evidence of Workmen's Compensation Insurance, CONTRACTOR shall provide a letter of certification from the Industrial Commission of Arizona that the CONTRACTOR is insured by the State Compensation Fund or is an authorized self-insurer or a certificate of insurance issued by an insurance company authorized by the Insurance Department of Arizona to write Workmen's Compensation and Occupational Disease Insurance in the State of Arizona.

### 2.2 Copies of Documents

CITY shall furnish to CONTRACTOR up to five copies (unless otherwise provided in the Contract Documents) of the Contract Documents as are reasonably necessary for the execution of the Work. Additional copies will be furnished, upon request, at the cost of reproduction.

### 2.3 Commencement of Contract Time/Notice to Proceed

Notice to Proceed may be given at any time within sixty days after the Notice of Award. The Contract Times will commence to run on the date indicated in the Notice to Proceed.

### 2.4 Contractor Review of Contract Documents.

Before commencing any work, CONTRACTOR shall carefully study and compare all the Contract Documents, Plans and Specifications and shall check and verify pertinent figures therein and all applicable quantities to determine if there are any conflicts, errors, discrepancies or any other reasons why the project can or should not be constructed as shown therein. If CONTRACTOR finds a conflict, error or discrepancy in the Contract Documents, or between the Contract

Documents and the physical conditions at the site of the Work or in any survey, or any other reason why the project can or should not be constructed as shown, CONTRACTOR shall report it to CITY REP in writing at once and before proceeding with the Work. The CITY REP on receipt of any such notice, will promptly investigate the circumstances and give appropriate instructions to the CONTRACTOR or make appropriate modifications to the Contract Documents. In the event such conflicts, errors, discrepancies or other reasons why the project can or should not be constructed as shown on such Contract Document, are later found to exist which the CONTRACTOR should reasonably have learned from such study and CONTRACTOR failed to inform CITY REP, then CONTRACTOR shall bear all cost arising therefrom.

### 2.5 Starting the Project

Work shall start on the date set forth in the "Notice to Proceed" as the date upon which Contract Times commence to run and shall be pursued diligently in accordance with the Construction Progress Schedule found acceptable by CITY REP or an acceptable revision/update. The work shall be completed within the time set forth in the Contract and as modified by subsequent Change Orders. No Work shall be done at the site prior to the date on which the Contract Times commence to run.

### 2.6 Construction Progress Schedule

A. Within ten (10) days of the date of execution of this Contract (unless otherwise specified in the Supplementary Conditions) CONTRACTOR shall submit to CITY REP for review for acceptability, a comprehensive Construction Progress Schedule in Critical Path Method (CPM) format, indicating the starting and completion dates of the various activities of the Work including any Milestones specified in the Contract Documents.

1) This Schedule shall contain a detailed representation of all activities for the project, both on-site construction and major procurement. All significant activities together with the resource loading requirements for each and all items appearing on the schedule of values or bid schedule for progress payments shall be shown on the Construction Progress Schedule or in attached reports to the Construction Progress Schedule.

2) Dependencies between activities shall be indicated so that it may establish as to the effect the progress of any one activity would have on other activities and on the schedule.

3) This schedule shall contain activities for submission, review and approval of all required submittals.

4) An amount of time shall be established prior to the final completion date for “punch list and cleanup.” No other activities shall be scheduled during this period. Punch list and cleanup must be shown on the Construction Progress Schedule and must be entirely completed prior to the expiration of ;the Contract Time.

5) CITY has estimated an amount of time reasonably required to complete the Project and based the Contract Time on this estimation. In the event CONTRACTOR believes the Contract Time is too short, CONTRACTOR shall so advise CITY prior to submitting a bid on the project to allow CITY to reevaluate the Contract Time. CONTRACTOR’S Construction Progress Schedule shall not show a “CONTRACTOR contingency” or CONTRACTOR float” at the end of the construction contract time. Damage claims are prohibited and will not be paid to CONTRACTOR by CITY based on CONTRACTOR’S failure to meet an early completion date shown on CONTRACTOR’S submitted Construction Progress Schedule. (i.e., float within the Contract Time is owned by CITY and while it may be used by CONTRACTOR it may not be claimed to CITY’S detriment.)

6) For all items of materials and equipment that are critical or which may require long lead times to acquire, the Construction Progress Schedule shall show dates for submission, review and approval of submittals, ordering and delivery.

7) Computer generated reports detailing the early/late start dates, early/late finish dates and dependencies shall be submitted by CONTRACTOR together with the CPM schedule.

B. Within ten (10) days of receipt of CITY REP comments, CONTRACTOR shall make all required corrections, adjustments and additions to complete the Construction Progress Schedule and resubmit it to CITY REP for review.

C. The Comprehensive Construction Progress Schedule will be acceptable to CITY REP if it is in CPM format and if it complies with the requirements set forth herein and provides a realistic and orderly progression of the Work to completion within any specified Milestones and Contract Times. Such Acceptance by CITY REP or any revision or correction made at the request of CITY REP, does not impose on CITY responsibility for the Progress Schedule, for sequencing, scheduling, or progress of the Work, nor interfere with or relieve CONTRACTOR from CONTRACTOR'S full responsibility therefor. Acceptance of CONTRACTOR'S Work Progress Schedule by CITY, does not constitute approval of the times listed thereon nor constitute any extension of the Contract Time.

D. The Construction Progress Schedule shall be prepared by CONTRACTOR and the scheduling of Construction shall be the responsibility of the CONTRACTOR. The requirement for the Schedule is included to assure adequate planning and execution of the Work and to assist CITY REP in evaluating progress of the Work.

E. The Construction Progress Schedule submitted and signed by CONTRACTOR, when found acceptable by CITY REP, becomes a part of the Contract Documents and CONTRACTOR may not change, modify or deviate from such schedule without the consent of CITY REP.

F. If, at any time after CONTRACTOR'S Construction Progress Schedule has been found acceptable, CONTRACTOR desires to or it becomes necessary to make any changes to such schedule, CONTRACTOR shall submit such changes to CITY REP for review. CONTRACTOR shall revise and submit for review an updated schedule whenever it is demonstrated that the time for completion of the Project or for any of the Milestones shown on the Contract Documents, has changed by ten ( 10) or more days.

G. An updated Construction Progress Schedule must also be submitted by CONTRACTOR with each pay application. The updates shall include all past performance history and actual dates activities started and finished from the beginning of the project; and (2) the City reserves the right to accept or reject each update and, if rejected, the Contractor must revise and/or correct the update and resubmit within 7 days of Contractor's receipt of City comments. Failure to comply with this requirement may be cause for rejection of Contractor's next monthly progress payment application, as provided for in 15.2.

H. CONTRACTOR shall complete the Project in accordance with the Construction Progress Schedule as it may be adjusted from time to time as provided herein.

**2.7 Other Submittals**

A. Within ten (10) days of the date of execution of this Contract (unless otherwise specified in the General Requirements), CONTRACTOR shall submit to CITY REP for review and acceptance, a preliminary schedule of Shop Drawings submissions. Within ten (10) days after receipt of CITY REP'S comments, CONTRACTOR shall submit the corrected and completed schedule of Shop Drawings Submissions for approval. CONTRACTOR'S schedule of Shop Drawings and Sample submittals will be acceptable to CITY REP if it provides a workable arrangement for reviewing and processing the required submittals.

B. Within ten (10) days of the date of execution of this Contract (unless otherwise specified in the Supplementary Conditions), CONTRACTOR shall submit to CITY REP for review and acceptance, a preliminary schedule of values of the Work, and the anticipated amount of each monthly progress payment that will become due CONTRACTOR in accordance therewith. The Schedule of Values shall include quantities and unit prices aggregating the Contract Price, and for lump sum items shall subdivide the Work into component parts in sufficient detail to serve as the basis for progress payments during construction. Within ten days after receipt of CITY REP's comments, CONTRACTOR shall submit the corrected and completed Schedule of Values of the Work. CONTRACTOR'S schedule of values will be acceptable to CITY REP if it complies with the requirements herein and if it provides a reasonable allocation of the Contract Price to component parts of the Work.

C. No application for payment on the Project will be accepted and no payment will be made until CONTRACTOR has submitted an acceptable and complete Construction Progress Schedule, Schedule of Shop Drawing Submissions and Schedule of Values of the Work.

### 2.8 Pre-Construction Conference

Within sixty days after the Notice of Contract Award, and before CONTRACTOR starts the Work at the site, CITY will hold a Pre-Construction conference for discussion of the schedules referred to above, to establish lines of communication, procedures for handling Shop Drawings and other submittals and for processing Applications for Payment, to establish a working understanding and communication system among the parties as to the Work, and coordination of work among the various utilities. CONTRACTOR, CONTRACTOR'S Resident Superintendent and CONTRACTOR'S designated safety officer shall attend this Pre-Construction conference which will also be attended by the Project Designer, CITY REP and representatives from any company whose facilities may be affected by the Project.

## ARTICLE 3 - CONTRACT DOCUMENTS: INTENT AND REUSE

### 3.1 Contract Documents

A. The Contract Documents establish the rights and obligations of the parties and include the Contract, Addenda (which pertain to the Contract Documents), CONTRACTOR'S Bid or Proposal (including documentation accompanying the Bid and any post-Bid documentation submitted prior to the Notice of Award) when attached as an exhibit to the Contract, the accepted Construction Progress Schedule, the Notice to Proceed, the Performance Bond, the Payment Bond, Project Design, Engineering and Specifications, these General Conditions, the Supplementary Conditions, Special Provisions, Specifications, Contract Drawings, as the same may be more specifically identified in the Contract, Change Orders, Work Change Directives, Field Orders and the written interpretations and clarifications of the Project Designer or CITY REP and Modifications issued after execution of the Contract. Approved Shop Drawings and the reports and drawings of subsurface and physical conditions are not Contract Documents. Only printed or hard copies of the items listed in this paragraph are Contract Documents. Files in electronic media format of text data, graphics, and the like that may be furnished by CITY to CONTRACTOR are not Contract Documents.

B. The Contract Documents also include those parts of the Maricopa Association of Governments Uniform Standard Specifications and Details for Public Works Construction (MAG Standard Specifications and Details), which address matters not otherwise covered by or addressed in these General Conditions, the City Standard Specifications and Details, the Project Specifications or the Construction Contract and said MAG Standard Specifications and Details are incorporated herein only to the extent they do not conflict with or modify any of those documents named herein above in paragraph 3.1A.

### 3.2 Intent

A. The Contract Documents comprise the entire Contract between CITY and CONTRACTOR concerning the Work. They may be altered only by a written Modification.

B. The Contract Documents are complementary and intended to be interpreted as a whole; what is called for by one plan note, drawing detail, contract provision, etc., is as binding as if called for by all.

C. It is the intent of the Contract Documents to describe a functionally complete Project (or part thereof) to be constructed in accordance with the Contract Documents. Any labor, documentation, services, materials, or equipment that may reasonably be inferred from the Contract Documents or from prevailing custom or trade usage as being required to produce the intended result shall be provided by CONTRACTOR whether or not specifically called for at no additional cost to CITY.

D. Clarifications and interpretations of the Contract Documents shall be issued by the Project Designer through the CITY REP.

E. The Specifications may describe or the Drawings may show the general arrangement of an item of material or equipment when the actual details of said arrangement will vary with the source of the material or equipment. In such cases, CONTRACTOR shall bear all direct and indirect costs to accommodate the item of material or equipment furnished, whether the item of material or equipment is furnished by a manufacturer named in the Specifications or is furnished as an approved substitute "or equal" item of material or equipment.

F. When words in the Specifications or on the Drawings, which have a well-known technical or trade meaning, are used to describe Work, materials or equipment, such words shall be interpreted in accordance with such meaning.

### 3.3 Reference Standards

A. Reference to standards, specifications, manuals, or codes of any technical society, organization, or association, or to Laws or Regulations, whether such reference be specific or by implication, shall mean the standard, specification, manual, code, or Laws or Regulations in effect at the time of opening of Bids (or on the Effective Date of the Contract if there were no Bids), except as may be otherwise specifically stated in the Contract Documents.

B. The provisions of any such standard, specification, manual or code, or any instruction of a Supplier shall not change the duties or responsibilities of CITY, CONTRACTOR, Project Designer or CITY REP, or any of their subcontractors, consultants, agents, or employees from those set forth in the Contract Documents, nor shall any such provision or instruction assign to CITY, CONTRACTOR, Project Designer, or any of their agents, or employees any duty or authority to supervise or direct the performance of the Work or any duty or authority to undertake responsibility inconsistent with the provisions of the Contract Documents.

### 3.4 Reporting and Resolving Discrepancies

A. If during the performance of the Work, CONTRACTOR finds a conflict, error or discrepancy in the Contract Documents, or between the Contract Documents and any provision of any law or regulation applicable to the performance of the Work or of any standard, specification, manual or code, any survey, or of any instruction of any Supplier, CONTRACTOR shall report it to CITY REP in writing at once and before proceeding with the Work affected thereby (except in an emergency as required by paragraph 6.13). However, CONTRACTOR shall not be liable to CITY for failure to report any such conflict, error or discrepancy unless CONTRACTOR knew or should reasonably have known thereof. On receipt of any such

notice, CITY REP will promptly investigate the circumstances and give appropriate instructions to the CONTRACTOR. Until such instructions are given, any Work done by the CONTRACTOR after discovery of such conflict, error or discrepancy which is directly or indirectly affected by such conflict, error or discrepancy will be at CONTRACTOR'S own risk and CONTRACTOR shall bear all cost arising therefrom.

B. Except as may be otherwise specifically stated in the Contract Documents, the provisions of the Contract Documents shall take precedence in resolving any conflict, error, ambiguity, or discrepancy between the provisions of the Contract Documents and:

1) the provisions of any standard, specification, manual, code or instruction (whether or not specially incorporated by reference in the Contract Documents); or

2) the provisions of any Laws or Regulations applicable to the performance of the Work (unless such an interpretation of the provisions of the Contract Documents would result in violation of such Law or Regulation);

3) provided, however, when any of the Contracts Documents incorporate by reference standards, specifications or other documents, the printed provisions contained in the Contract Documents take precedence over any provisions incorporated by reference.

C. In a case of a discrepancy or conflict, the order in which the various contract documents shall govern is as follows from highest to lowest: Technical Specifications; Plans; Supplementary Conditions (sometimes referred to as Special Conditions); General Conditions; City of Chandler standard specifications and standard details.

D. Figured dimensions on Drawings shall govern, but work not dimensioned shall be as directed. Work not particularly shown or specified shall be the same as similar parts that are shown or specified. Large scale details shall take precedence over smaller scale drawings as to shape and details of construction. Specifications shall govern as to materials and workmanship. The specification calling for higher quality material or workmanship shall prevail.

### 3.5 Re-Use of Documents

Neither CONTRACTOR nor any Subcontractor, manufacturer, fabricator, supplier or distributor shall have or acquire any title to or ownership rights in any of the Drawings, Specifications or other documents (or copies of any thereof) prepared by or bearing the seal of the Project Designer; and they shall not re-use any of them on extensions of the Project or any other project without written consent of CITY and the Project Designer and specific written verification or adaptation by the Project Designer.

## ARTICLE 4 - AVAILABILITY OF LANDS; PHYSICAL CONDITIONS; REFERENCE POINTS

### 4.1 Availability of Lands

CITY shall furnish, as indicated in the Contract Documents the lands upon which the Work is to be performed, rights-of-way for access thereto, and such other lands which are designated for the use of CONTRACTOR. Easements for permanent structures or permanent changes in existing facilities will be obtained and paid for by CITY, unless otherwise provided in the Contract Documents. If CONTRACTOR believes that any delay in CITY'S furnishing these lands or easements entitles CONTRACTOR to an extension of the Contract Time, CONTRACTOR may make a claim therefore as provided in Article 13. CONTRACTOR shall provide for all additional lands and access thereto that may be required for temporary construction facilities or storage of materials and equipment (marshalling yard).

### 4.2 Physical Conditions, Investigations and Reports

A. CONTRACTOR is to protect all existing facilities during construction. Utility poles that may be affected by the construction activities shall be protected by the CONTRACTOR. CONTRACTOR shall notify the appropriate Utility Company or agency of any construction that may affect their facilities.

B. The Supplementary Conditions identify any reports of investigations and tests of subsurface and latent physical conditions at the site, and any reports of conditions that otherwise may affect cost, progress or performance of the Work which have been utilized by Project Designer in preparation of the Drawings and Specifications. These reports are not intended to constitute any explicit or implicit representation as to the nature of the subsurface and latent physical conditions which may be encountered at the site or to constitute explicit or implicit representations as to any other matter contained in any report. Such reports are not guaranteed as to accuracy or completeness and are not part of the Contract Documents.

### 4.3 Differing Subsurface or Physical Conditions; Underground Facilities

4.3.1. Underground Facilities

A. The existence and number of facilities as shown on the plans are estimated from information furnished by the particular utility. CONTRACTOR is responsible for field verification and location of all utilities prior to the start of construction. No field work shall be allowed to start until CONTRACTOR has arranged for and Blue Stake has located all affected utilities. In addition CONTRACTOR shall expose and physically locate all potentially conflicting utilities prior to construction. The actual locations of the utilities shall be compared to locations shown on the plans and any required changes in alignment and grade shall be made at the time of construction in consultation with CITY REP. It is generally recognized and CONTRACTOR should anticipate that information from Blue Stake or information from utility companies during project design, frequently fails to disclose all underground facilities. The fact that more utility lines or other underground facilities are located in the Project Site than shown on the Project Plans does not constitute an “unforeseen Condition” and such undisclosed underground facilities do not differ materially from the conditions which CONTRACTOR should expect. The provisions of Sections 105.4, 105.6, 107.11 and 109.8.1 of the MAG Uniform Standard Specifications for Public Works Construction apply and are incorporated herein by reference.

. B. The project requires considerable coordination with utility companies such as Arizona Public Service, Quest, Cox, SW Gas and Salt River Project. The provisions of Sections 105.4, 105.6, 107.11 and 109.8.1 of the MAG Uniform Standard Specifications for Public Works Construction strictly apply and no claims for delays due to utility work on the project will be allowed.

C. Utilities damaged shall be repaired at the CONTRACTOR'S expense.

4.3.2 Unforeseen Conditions

The provisions of Section 104.2.2 of the MAG Uniform Standard Specifications for Public Works Construction strictly apply.

### 4.4 Reference Points

CITY shall provide engineering surveys to establish reference points for construction which in CITY'S judgment are necessary to enable CONTRACTOR to proceed with the Work. CONTRACTOR shall be responsible for laying out the Work, shall protect and preserve the established reference points and shall make no changes or relocations without the prior written approval of CITY. CONTRACTOR shall report to CITY REP whenever any reference point is lost

or destroyed or requires relocation because of necessary changes in grades or locations, and shall be responsible for replacement or relocation of such reference points by a licensed surveyor.

### 4.5 Hazardous Environmental Conditions

A. CONTRACTOR shall not be responsible for any Hazardous Environmental Condition uncovered or revealed at the Site which was not shown or indicated in Drawings or Specifications or identified in the Contract Document to be within the scope of the Work. CONTRACTOR shall be responsible for a Hazardous Environmental Condition created with any materials brought to the Site by CONTRACTOR, Subcontractors, Suppliers, or anyone else for whom CONTRACTOR is responsible.

B. If CONTRACTOR encounters a Hazardous Environmental Condition or if CONTRACTOR or anyone for whom CONTRACTOR is responsible creates a Hazardous Environmental Condition. CONTRACTOR shall immediately: (i) secure or otherwise isolate such condition; (ii) stop all Work in connection with such condition and in any area affected thereby (except in an emergency as required by paragraph 6.13); and (iii) notify CITY and CITY REP (and promptly thereafter confirm such notice in writing.) CITY shall promptly consult with CITY REP concerning the necessity for CITY to retain a qualified expert to evaluate such condition or take corrective action, if any.

**C.** CONTRACTOR shall be responsible for any and all civil or criminal penalties, fines, damages, or other charges imposed by any regulatory agency or court for sewage discharges that are in violation of applicable statutes and laws and that are a result, direct or indirect, of work performed under this Contract. CONTRACTOR shall also be responsible for reimbursement to CITY for administration, reporting, and tracking expenses required as a result of any spill event. In the event the regulatory agency or court imposes a probationary period, CONTRACTOR shall post bond for the probationary period to ensure that all such costs are reimbursed to CITY. This responsibility shall apply whether penalties are imposed directly on CONTRACTOR or any of its subcontractors, or the City of Chandler. CONTRACTOR shall defend and indemnify CITY against such penalties. Regulatory agencies may include, but are not limited to, the Arizona Department of Environmental Quality (ADEQ) and the United States Environmental Protection Agency (USEPA).

## ARTICLE 5 – PERFORMANCE AND PAYMENT BONDS

A. CONTRACTOR shall furnish Performance and Payment Bonds, each in an amount at least equal to the Contract Price, as security for the faithful performance and payment of all CONTRACTOR'S obligations under the Contract Documents. With the performance and payment bonds CONTRACTOR shall provide a copy of the surety company's Certificate of Authority certified by the Arizona Department of Insurance. These Bonds shall remain in effect at least until one year after the date of final payment, except as otherwise provided by law. CONTRACTOR shall also furnish such other Bonds as are required by the Supplementary Conditions. All Bonds shall be in the forms prescribed by the Bidding Documents or Supplementary Conditions and be executed by such sureties as:

1) Are licensed to conduct business in the State of Arizona and have an agent for service of process in Arizona, and

2) Are named in the current list of "Companies Holding Certificates of Authority as Acceptable Sureties on Federal Bonds and as Acceptable Reinsuring Companies" as published in Circular 570 (amended) by the Audit Staff Bureau of Accounts, U.S. Treasury Department, and

3) Are acceptable to the City of Chandler.

All Bonds signed by an agent must be accompanied by a certified copy of the authority to act.

B. If the surety on any Bond furnished by CONTRACTOR is declared a bankrupt or becomes insolvent, or CONTRACTOR'S right to do business is terminated in any state where any part of the Project is located, or it ceases to meet the requirements of paragraph A above, CONTRACTOR shall within five (5) days thereafter substitute another Bond and surety, both of which shall be acceptable to CITY.

## ARTICLE 6 - CONTRACTOR'S RESPONSIBILITIES

### 6.1 Supervision and Superintendence

A. CONTRACTOR shall supervise, inspect and direct the Work competently and efficiently, devoting such attention thereto and applying such skills and expertise as may be necessary to perform the Work in accordance with the Contract Documents. CONTRACTOR shall be solely responsible for the means, methods, techniques, sequences and procedures of construction, but CONTRACTOR shall not be solely responsible for the negligence of others in the design or specification of a specific means, method, technique, sequence of procedure of construction which is shown or indicated in and expressly required by the Contract Documents. CONTRACTOR shall be responsible to see that the completed Work complies accurately with the Contract Documents.

B. At all times during the progress of the Work, CONTRACTOR shall assign a competent resident superintendent thereto, who shall not be replaced without written notice to CITY REP and the Project Designer except under extraordinary circumstances. The superintendent will be CONTRACTOR'S representative at the site and shall have authority to act on behalf of CONTRACTOR. All communications given to the superintendent shall be as binding as if given to CONTRACTOR. At the Pre-construction Conference CONTRACTOR shall provide to CITY REP the name of the person assigned as CONTRACTOR'S resident superintendent and said resident superintendent shall attend the Pre-Construction Conference with CONTRACTOR.

C. Whenever the resident superintendent is not present at a particular part of the Work where the CITY REP or Project Designer may desire to inform the CONTRACTOR relative to interpretation of the Drawings and Specifications or to disapproval or rejection of materials or Work performed, the CITY REP or Project Designer may provide such information in writing to the foreman or other worker in charge of the particular part of the Work in reference to which the information is given. Information so given shall be as binding as if given to the superintendent.

D. CONTRACTOR shall be solely responsible for coordination of all of the Work. CONTRACTOR shall supervise, direct and cooperate fully with all Subcontractors, manufacturers, fabricators, suppliers, distributors, installers, testing agencies and all others whose services, materials or equipment are required to ensure completion of the Work within the Contract Time.

E. CONTRACTOR shall also coordinate their Work with the work of others to assure compliance with schedules.

F. CONTRACTOR shall attend and participate in all project coordination or progress meetings and report on the progress of all Work and compliance with schedules.

### 6.2 Labor, Materials and Equipment

A. CONTRACTOR shall provide competent, suitably qualified personnel to survey, lay out and construct the Work as required by the Contract Documents. CONTRACTOR shall at all times maintain good discipline and order at the site.

B. Except in connection with the safety or protection of persons or the Work or property at the site or adjacent thereto, and except as otherwise indicated in the Supplementary Conditions, all Work at the site shall be performed during regular working hours, and CONTRACTOR will not permit overtime work or the performance of Work on Saturday, Sunday or any legal holiday without CITY'S written consent given after prior written notice to CITY REP. If it shall become absolutely necessary to perform Work at night or on Saturdays, Sundays or legal holidays, the CITY REP shall be informed at least 24 hours in advance of the beginning of performance of such Work. Only such Work shall be done at night as can be done satisfactorily as determined by the CITY REP and in a first-class manner. Good lighting and all other necessary facilities for carrying out and inspecting the Work shall be provided and maintained at all points where such Work is being done. Further, unless such non-normal work hours are performed at CITY'S request or required by the Contract Documents, CONTRACTOR shall pay to CITY all additional costs incurred by CITY by reason of such non normal working hours. Expenses incurred by CITY for overtime compensation for City Staff, CITY REP and/or Project Designer and staff will be charged to CONTRACTOR at the rate of $40.00 per hour for CITY on-site inspection staff and at actual cost plus ten percent administrative overhead for all others. Such costs may be deducted by CITY from any payments due to CONTRACTOR. Provided, however, if overtime work or work during other than normal hours is at the request of CITY and not due to CONTRACTOR delay, CITY will pay the cost of CITY overtime expenses.

C. CONTRACTOR shall provide and assume full responsibility for services, materials, equipment, labor, transportation, construction equipment and machinery, tools, appliances, fuel, power, light, heat, telephone, water, sanitary facilities, temporary facilities, and all other facilities and incidentals necessary for the execution, testing, start-up, and completion of the Work.

D. All materials and equipment incorporated into the Work shall be as specified or, if not specified, shall be of good quality and new, except as otherwise provided in the Contract Documents. All warranties and guarantees specifically called for by the Specifications shall expressly run to the benefit of CITY. If required by CITY REP, CONTRACTOR shall furnish satisfactory evidence (including reports of required tests) as to the kind and quality of materials and equipment. When the quality of material or equipment is not specifically set forth in the Contract Documents, the best available quality of material or equipment available within a reasonable distance of the project shall be provided.

E. All materials and equipment shall be stored, applied, installed, connected, erected, used, cleaned and conditioned in accordance with the instructions of the applicable manufacturer, fabricator, supplier or distributor, except as otherwise provided in the Contract Documents; but no provisions of any such instructions will be effective to impose on CITY or PROJECT DESIGNER responsibility for the means, methods, techniques, sequences or procedures of construction or for safety precautions incident thereto.

F. CONTRACTOR shall maintain sufficient competent personnel, drafting equipment and supplies at their disposal for the purpose of preparing layout and coordination drawings. These drawings shall supplement the Contract Documents, and the work and Shop Drawings as necessary to correlate the work of various trades. Where such drawings are to be prepared by the mechanical, electrical, plumbing, or heating and ventilating Subcontractors, CONTRACTOR will ensure that each Subcontractor has the required personnel and facilities.

### 6.3 Substitutes and "Or-Equals"

Whenever an item of material or equipment is specified or described in the Contract Documents by using the name of a proprietary item or the name of a particular manufacturer, fabricator, supplier, distributor or specific professional/building certifications or standards, the specification or description is intended to establish the type, function, appearance and quality required. Unless the specification contains or is followed by words reading that no like, equivalent, or "or-equal" item or indicating that no substitution is permitted, other items of material or equipment or material or equipment of other manufacturers, fabricators, suppliers, distributors or certifications may be submitted to CITY REP for review as specified below.

A. Requests for review of substitute items of material and equipment will not be accepted by CITY REP from anyone other than CONTRACTOR.

B. If CONTRACTOR wishes to furnish or use a substitute item of material or equipment, CONTRACTOR shall make written application to CITY REP for acceptance thereof, certifying that the proposed substitute will perform adequately the functions and achieve the results called for by the general design, be similar and of equal substance to that specified and be suited to the same use as that specified. The application will state that the evaluation and acceptance of the proposed substitute will not prejudice CONTRACTOR'S timely achievement of final completion, whether or not acceptance of the substitute for use in the Work will require a change in the Drawings or Specifications to adapt the design to the substitute and whether or not incorporation or use of the substitute in connection with the Work is subject to payment of any license fee or royalty. All variations of the proposed substitute from that specified shall be identified in the application and available maintenance, repair and replacement service will be indicated. The application will also contain a statement that CONTRACTOR agrees to pay all costs that will result directly or indirectly from acceptance of such substitute, including costs of redesign and claims of other contractors affected by the resulting change.

C. CITY REP may require CONTRACTOR to furnish at CONTRACTOR'S expense additional data about the proposed substitute. CITY REP will be allowed a reasonable time within which to evaluate the proposed substitute and to obtain a recommendation from the Project Designer. CITY REP will be the sole judge of acceptability and no substitute will be ordered or installed without CITY REP'S prior written acceptance.

D. CITY REP may require CONTRACTOR to furnish at CONTRACTOR'S expense a special performance guarantee or other surety with respect to any substitute.

E. CITY REP will record time required by CITY REP, the Project Designer and CITY'S consultants in evaluating substitutions proposed by CONTRACTOR and in making changes in the Drawings or Specifications occasioned thereby. Whether or not CITY REP accepts a proposed substitute, CONTRACTOR shall reimburse CITY for the charges of CITY REP, the Project Designer and CITY'S consultants for evaluating any proposed substitute that does not meet the requirements of the Drawings and Specifications occasioned thereby. CITY may deduct any such charges from any payments due to CONTRACTOR.

### 6.4 Conformity with Contract Documents and Allowable Deviations

The Work shall conform to the lines, grades, dimensions, tolerances, and material and equipment requirements shown on the Drawings or set forth in the Specifications. Although measurement, sampling, and testing may be considered evidence as to such conformity, the CITY REP shall be the sole judge as to whether the Work or materials deviate from the Drawings and Specifications, and CITY REP's decision as to any allowable deviations therefrom shall be final.

### 6.5 Concerning Subcontractors

A. CONTRACTOR shall not employ any Subcontractor or other person or organization (including those who are to furnish the principal items of materials or equipment), whether initially or as a substitute, against whom CITY or the Project Designer may have reasonable objection. A Subcontractor or other person or organization identified in writing to CITY and the Project Designer by CONTRACTOR prior to the Notice of Award and not objected to in writing by CITY or the Project Designer prior to the Notice of Award will be deemed acceptable to CITY and the Project Designer. If CITY or the Project Designer after due investigation has reasonable objection to any Subcontractor, other person or organization proposed by CONTRACTOR after the Notice of Award, CONTRACTOR shall submit an acceptable substitute and the Contract Price shall be increased or decreased by the difference in cost occasioned by such substitution, and an appropriate Change Order shall be issued. CONTRACTOR shall not be required to employ any SUBCONTRACTOR, other person or organization against whom CONTRACTOR has reasonable objection. Acceptance of any Subcontractor, other person or organization by CITY or the Project Designer shall not constitute a waiver of any right of CITY or the Project Designer to reject defective work.

B. CONTRACTOR shall be fully responsible for all acts and omissions of their Subcontractors and of persons and organizations directly or indirectly employed by them and of persons and organizations for whose acts any of them may be liable to the same extent that CONTRACTOR is responsible for the acts and omissions of persons directly employed by CONTRACTOR. Nothing in the Contract Documents shall create any contractual relationship between CITY or the Project Designer and any Subcontractor or other person or organization having a direct contract with CONTRACTOR, nor shall it create any obligation on the part of CITY to pay or to see to the payment of any moneys due any Subcontractor or other person or organization, except as may otherwise be required by law. CITY may furnish to any Subcontractor or other person or organization, to the extent practicable, evidence of amounts paid to CONTRACTOR or amount of specific Work done.

C. The Divisions and Sections of the Specifications and the identifications of any Drawings shall not control CONTRACTOR in dividing the Work among Subcontractors or delineating the Work to be performed by any specific trade.

D. All Work performed for CONTRACTOR by a Subcontractor will be pursuant to an appropriate Contract between CONTRACTOR and the Subcontractor which specifically binds the Subcontractor to the applicable terms and conditions of the Contract Documents for the benefit of CITY.

### 6.6 Patent Fees And Royalties

CONTRACTOR shall pay all license fees and royalties and assume all costs incident to the use in the performance of the Work or the incorporation in the Work of any invention, design, process, product or device which is the subject of patent rights or copyrights held by others. If a particular invention, design, process, product or device is specified in the Contract Documents for use in the performance of the Work and if to the actual knowledge of CITY or the Project Designer its use is subject to patent rights or copyrights calling for the payment of any license fee or royalty to others, the existence of such rights shall be disclosed by CITY in the Contract Documents. CONTRACTOR shall indemnify and hold harmless CITY and the Project Designer and anyone directly or indirectly employed by either of them from and against all claims, damages, losses and expenses (including attorneys' fees) arising out of any infringement of patent rights or copyrights incident to the use in the performance of the Work or resulting from the incorporation in the Work of any invention, design, process, product or device not specified in the Contract Documents, and shall defend all such claims in connection with any alleged infringement of such rights.

**6.7 Permits**

A. Unless otherwise specified in the Contract Documents, CITY will, upon appropriate cooperation from CONTRACTOR, obtain and provide to CONTRACTOR those permits issued by the City of Chandler. CONTRACTOR shall obtain all other construction permits and licenses. CONTRACTOR shall pay all other governmental charges and inspection fees necessary for the prosecution of the Work, which are applicable at the time of bid opening. CONTRACTOR shall also pay all charges of utility service companies for connections to the Work, and CITY shall pay all charges of such companies for capital costs related thereto, such as plant investment fees and system development fees.

B. Work in any public easement or right-of-way shall be done in accordance with the requirements of a permit issued by the public agency in whose easement or right-of-way the Work is located in addition to conforming to the Drawings and Specifications. If a permit is not required, the Work shall conform to the standards of the public agency involved in addition to conforming to the Drawings and Specifications.

C. City of Chandler permits and permits from all applicable governing jurisdictions (i.e. Maricopa County and Arizona Department of Transportation) are required while performing work on City contracts. CONTRACTOR shall pay all permit fees as required by the other governing jurisdictions.

D. Construction water and landfill fees will not be waived and must be paid for by the CONTRACTOR. The system development fees for water and sewer shall be paid for by the CITY unless shown in the itemized Bid Schedule.

**6.8 Laws and Regulations, and Government Policies**

A. CONTRACTOR shall give all notices and comply with all laws, ordinances, standard details and specifications, rules and regulations applicable to the Work whether adopted by a City, State or Federal governmental agency.

B. If CONTRACTOR observes that the Specifications or Drawings are at variance with applicable laws or regulations, CONTRACTOR shall give CITY REP prompt written notice thereof, and any necessary changes shall be adjusted by an appropriate Modification. If CONTRACTOR performs any Work knowing or having reason to know that it is contrary to such laws, ordinances, rules and regulations, and without such notice to CITY REP, CONTRACTOR shall bear all costs arising therefrom; however, it shall not be CONTRACTOR'S primary responsibility to make certain that the Specifications and Drawings are in accordance with such laws, ordinances, rules and regulations.

C. The CONTRACTOR shall comply with the Immigration Reform and Control Act of 1986 (IRCA). The CONTRACTOR understands and acknowledges the applicability of the IRCA activities. The CONTRACTOR agrees to comply with the IRCA while performing their work and to permit City inspection of CONTRACTOR personnel records to verify such compliance.

D. The CONTRACTOR shall report immediately any discovery of archeological ruins or artifacts. Excavation must stop immediately so that the CITY can decide on the pertinent steps to follow such discovery.

E. If the project is Federally or State funded, additional requirements are generally associated with the project implementation. CONTRACTOR'S attention is directed to the fact that the Contract may include those additional requirements.

F. Spills of oil, gas, chemicals or any hazardous materials must be reported by the CONTRACTOR immediately. Approved mitigation measures shall be taken by the

CONTRACTOR as expediently as possible. Hazardous wastes shall not be discharged into the City's sanitary or storm sewer systems. See also § 4.5.

### 6.9 Taxes

A. CONTRACTOR shall pay all sales, consumer, use, and other similar taxes in effect at the time of bid submittal and required to be paid by CONTRACTOR, in accordance with the law of the state of Arizona. When equipment, materials or supplies generally taxable to CONTRACTOR are eligible for a tax exemption due to the nature of the Project, CONTRACTOR shall assist CITY in applying for and obtaining such tax credits and exemptions which shall be paid or credited to CITY.

B. CONTRACTOR shall obtain a current City of Chandler privilege tax license before Notice to Proceed is issued.

### 6.10 Use of Premises

A. CONTRACTOR shall confine construction equipment, the storage of materials and equipment and the operations of workmen to areas permitted by law, ordinances, permits, or the requirements of the Contract Documents, and shall not unreasonably encumber the premises with construction equipment or other materials or equipment.

B. CONTRACTOR shall not load nor permit any part of any structure to be loaded in any manner that will endanger the structure, nor shall CONTRACTOR subject any part of the work or adjacent property to stresses or pressures that will endanger it.

### 6.11 Record Documents

A. CONTRACTOR shall maintain one record copy of all Specifications, Drawings, Addenda, Written Amendments, Change Orders, Work Change Directives, Field Orders, written interpretations, and clarifications, in good order, in a safe place at the construction site and shall annotate them to show all changes made during the construction process. These record documents together with all approved Samples and a counterpart of all approved Shop Drawings shall be available to CITY REP and the Project Designer for examination and/or reference. Upon completion of the Work, these record documents, Samples and Shop Drawings will be delivered to CITY REP for CITY.

B. CONTRACTOR shall also maintain, revise and provide accurate field data on a red-lined set of contract drawings, which are to be kept current and submitted as complete at the conclusion of the construction. These record drawings will be reviewed and used as documentation for periodic progress payments, and upon project completion, for the preparation of “as built” file drawings by the Project Designer. All record “as built” information shall be submitted on 4 mil photo mylar and shall be 24” x 36” in size. Final payment will not be issued until all record drawings and as built information are submitted by CONTRACTOR, and certified to be complete by the Project Designer and/or CITY REP.

### 6.12 Safety and Protection

A. CONTRACTOR shall be responsible for initiating, maintaining and supervising all safety precautions and programs in connection with the Work. CONTRACTOR shall take all necessary precautions for the safety of, and shall provide the necessary protection to prevent damage, injury or loss to:

1) All employees on the Work and other persons who may be affected thereby;

2) All the Work and all materials or equipment to be incorporated therein, whether in storage on or off the site; and

3) Other property at the site or adjacent thereto, including trees, shrubs, lawns, walks, pavements, roadways, structures and utilities not designated for removal, relocation or replacement in the course of construction.

B. CONTRACTOR shall comply with all applicable laws, ordinances, rules, regulations and orders of any public body having jurisdiction for the safety of persons or property or to protect them from damage, injury, or loss; and shall erect and maintain all necessary safeguards for such safety and protection. CONTRACTOR shall notify owners of adjacent property, utilities and other underground facilities when prosecution of the Work may affect them. CONTRACTOR shall cooperate with the owner in the protection, removal, relocation or replacement of such property. All damage, injury or loss to any property referred to in Paragraph A above, caused, directly or indirectly, in whole or in part, by CONTRACTOR, any Subcontractor or anyone directly or indirectly employed by any of them or anyone for whose acts any of them may be liable, shall be remedied by CONTRACTOR (except damage or loss attributable to the fault of Drawings or Specifications or to the acts or omissions of CITY or anyone employed by CITY or anyone for whose acts it may be liable, and not attributable, directly or indirectly, in whole or in part, to the fault or negligence of CONTRACTOR). CONTRACTOR'S duties and responsibilities for the safety and protection of the Work shall continue until such time as all the Work is completed and CITY REP has issued a notice to CITY and CONTRACTOR in accordance with Paragraph 14.9 that the Work is acceptable.

C. CONTRACTOR shall designate in writing and submit at the Pre-construction Conference the name of a responsible member of their organization, the designated Safety at the site whose duty shall be the prevention of accidents. This person shall be CONTRACTOR'S superintendent unless otherwise designated in writing by CONTRACTOR to CITY.

D. The right of CITY REP to conduct construction review or observation of the CONTRACTOR'S performance will not include review or observation of the adequacy of the CONTRACTOR'S safety measures in, on, or near the construction site.

### 6.13 Emergencies

In emergencies affecting the safety or protection of persons or the Work or property at the site or adjacent thereto, CONTRACTOR, without special instruction or authorization from CITY REP, is obligated to act to prevent threatened damage, injury or loss. CONTRACTOR shall give CITY REP prompt written notice of any significant changes in the Work or deviations from the Contract documents caused thereby.

### 6.14 Shop Drawings and Samples

A. CONTRACTOR shall submit Shop Drawings to CITY REP for review and approval in accordance with the acceptable schedule of Shop Drawing and Sample submittals (see Paragraphs 2.6 & 2.7) and the procedures specified in the Contract Documents. All Shop Drawings shall have been checked by and stamped with the approval of CONTRACTOR, after checking and verifying all field measurements, and marked with identification as CITY REP may require. The data shown on the Shop Drawings will be complete with respect to dimensions, design criteria, materials of construction and the like to enable Project Designer to review the information as required.

B. CONTRACTOR shall also submit Samples to CITY REP for review and approval in accordance with the acceptable schedule of Shop Drawings and Sample submittals. All Samples shall have been checked by and stamped with the approval of CONTRACTOR, identified clearly as to material, manufacturer, any pertinent catalog numbers and the use for which intended.

C. At the time of each submission, CONTRACTOR shall in writing call to the attention of CITY REP and Project Designer, all deviations that the Shop Drawings or Samples may have from the requirements of the Contract Documents.

D. CITY REP will review and approve or when applicable cause the Project Designer to review and approve, with reasonable promptness, but in no case more than twenty one (21) days, Shop Drawings and Samples. Provided, however, such review and approval shall be only for conformance with the design concept of the Project and for compliance with the information given in the Contract Documents, and shall not extend to means, methods, sequences, techniques or procedures of construction or to safety precautions or programs incident thereto. The review and approval of a separate item as such will not indicate approval of the assembly in which the item functions. CONTRACTOR shall make all corrections required by CITY REP and Project Designer and shall return the required number of corrected copies of Shop Drawings and resubmit new Samples for review and approval. CONTRACTOR shall direct specific attention in writing to revisions other than the corrections called for by Project Designer or CITY REP on previous submittals. CONTRACTOR'S stamp of approval on any Shop Drawing or Sample shall constitute a representation to CITY and the Project Designer that CONTRACTOR has either determined and verified all quantities, dimensions, field construction criteria, materials, catalog numbers, and similar data or assumes full responsibility for doing so, and that CONTRACTOR has reviewed or coordinated each Shop Drawing or Sample with the requirements of the Work and the Contract Documents.

E. Where a Shop Drawing or Sample is required by the Specifications, no related Work shall be commenced until the submittal has been reviewed and approved by CITY REP and/or Project Designer.

F. Review and approval of Shop Drawings or Samples by CITY REP and/or the Project Designer shall not relieve CONTRACTOR from responsibility for any deviations from the Contract Documents unless CONTRACTOR has in writing called attention to such deviation at the time of submission and CITY REP or PROJECT DESIGNER has given written concurrence and approval to the specific deviation, nor shall any concurrence and approval by CITY REP or Project Designer relieve CONTRACTOR from responsibility for errors or omissions in the Shop Drawings or Samples.

### 6.15 Continuing the Work

CONTRACTOR shall carry on the Work and maintain the progress schedule during all disputes or disagreements with CITY. No Work shall be delayed or postponed pending resolution of any disputes or disagreements, except as CONTRACTOR and CITY may otherwise agree in writing.

### 6.16 Progress Schedule

A. CONTRACTOR shall adhere to the Construction Progress Schedule established in accordance with Paragraph 2.6, as it may be adjusted from time to time as provided below.

B. CONTRACTOR shall submit to CITY REP for acceptance (to the extent indicated in Paragraph 2.6) proposed adjustments in the Progress Schedule that will not result in changing the Contract Times (or Milestones). Such adjustments will conform generally to the Progress Schedule then in effect and additionally will comply with any applicable provisions of the Contract Documents.

C. Proposed adjustments to the Progress Schedule that will change the Contract Times (or Milestones) shall be submitted in accordance with the requirements of Article 12. Such adjustments may only be made by a Change Order or Written Amendment.

### 6.17 Errors or Discrepancies Noted by Contractor

It is the duty of CONTRACTOR to promptly notify CITY REP in writing of any design, materials, or specified method that CONTRACTOR believes may prove defective or insufficient. If CONTRACTOR knows or should have known that a defect or insufficiency exists in design, materials, or specified method and fails to promptly notify CITY REP in writing of this belief, the CONTRACTOR waives any right to assert that defect or insufficiency in design, materials, or specified method at any later date in any legal or equitable proceeding against the CITY or in any subsequent arbitration or settlement conference between the CITY and the CONTRACTOR. CITY REP, on receipt of any such notice, will promptly investigate the circumstances and give appropriate instructions to the CONTRACTOR.

### 6.18 Contractor's General Warranty and Guarantee

A. CONTRACTOR warrants and guarantees to CITY that all Work will be in accordance with the Contact Documents and will not be defective.

   CONTRACTOR'S obligation to perform and complete the Work in accordance with the Contract Documents shall be absolute. Neither recommendation of any progress or final payment by CITY REP, nor the issuance of a letter of Substantial Completion, nor any payment or issuance of a certificate by CITY to CONTRACTOR under the Contract Documents, nor any use or occupancy of the Work or any part thereof by CITY, nor any act of acceptance by CITY nor any failure to do so, nor the issuance of a notice of acceptability by CITY REP pursuant to Section 15.9, nor any correction of defective Work by CITY shall constitute an acceptance of Work not in accordance with the Contract Documents or a release of CONTRACTOR'S obligation to perform the Work in accordance with the Contract Documents.

C. All representations, warranties and guarantees made in the contract documents shall survive final payment and termination or completion of this Contract.

### 6.19 Reimbursement For Additional Project Designer Services

A. The Work to be accomplished under these Contract Documents has been designed for CITY by a registered Professional Engineer and/or licensed Architect (Project Designer) retained by CITY for this purpose. It is understood that normal Construction Administration for the purpose of interpretation of the Contract Documents is provided by CITY. Should any services of the Project Designer be required to assist in the corrections of errors or omissions by CONTRACTOR, or services of the Project Designer be required because of changes in structure or equipment where CONTRACTOR has requested approval of substitute methods or material, or any other items detailed herein below, those services will be provided by the Project Designer at the standard hourly rates previously negotiated with CITY and shall be paid for by the CONTRACTOR.

B. The Project Designer shall be reimbursed by CONTRACTOR for the Project Designer's additional services to the Project through no fault of CITY or the Project Designer including, but not limited to, the following conditions:

   1) Additional site visits, investigations, inspections, design work and/or reports by the Project Designer which are required due to damages to existing facilities or completed work caused by the CONTRACTOR in his performance, CONTRACTOR'S negligence, or CONTRACTOR'S work which is rejected as defective or as failing to conform to the Contract Documents

3) Project Designer Construction Phase Services rendered on the project during the time the project remains incomplete after the Contract date of final completion will be charged to CONTRACTOR at a rate previously negotiated CITY.

4) All retesting required due to the failure of CONTRACTOR'S work to meet the requirements of the Contract Documents shall be at CONTRACTOR'S expense. All standby and travel time by the CITY'S testing lab, the Project Designer or CITY'S REP due to CONTRACTOR'S inability to be prepared for testing at the agreed upon time shall be at the CONTRACTOR'S expense.

C. City may withhold from any payment otherwise due to CONTRACTOR any amounts necessary to pay the Project Designer for such additional services as provided herein above.
D. CONTRACTOR shall not be required to bear additional costs incurred by CITY due to errors by the Project Designer.

**ARTICLE 7 COOPERATION WITH OTHERS:**

**7.1 Contractor Responsible to Resolve Conflicts**

A. The provisions of MAG Uniform Standard Specifications for Public Works Construction Sections 105.6, 105.6.1, 105.6.2, 107.11 and 109.8.1 strictly apply and shall be read together with Section 4.3.1 herein.

B. It shall be the responsibility of CONTRACTOR to ascertain the need for bracing or shoring of utility poles during the construction of the Project and no additional compensation will be allowed for such bracing or shoring.

C. In general, the contract will indicate various utility items, certain of which are to be relocated or adjusted by the utility owner and others, by the Contractor. Any work performed separate from this Contract by CONTRACTOR for any utility company, shall be paid for by the utility company and will not be a part of this Contract with CITY.

**7.2 Notifications Requirement in the Event of Any Damage to or Dislocation of Underground Facilities**

In the event of any damage to or dislocation of any underground facility, CONTRACTOR shall immediately notify the owner of such facility and shall not attempt to repair any facility, except those intended for the conveyance or storage of water and sewage. The excavation shall be left open until the arrival of representatives of the owner. The owner of the damaged facility will dispatch its representative promptly to examine the underground facility and, if necessary, make repairs.

**7.3 Cooperation Between Contractors**

CITY reserves the right at any time to contract for and perform other or additional work on or near the work covered by the contract. When separate contracts are let within the limits of any one project, each CONTRACTOR shall conduct his work so as not to interfere with or hinder the progress or completion of the work being performed by other Contractors. Contractors working on the same project shall cooperate with each other as directed by City. Each Contractor involved shall assume all liability, financial or otherwise, in connection with his contract and shall protect and save harmless the CITY from any and all damages or claims that may arise because of inconvenience, delay, or loss experienced by such Contractor because of the presence and operations of other Contractors working within the limits of the same project. Each Contractor shall arrange their work and shall place and dispose of the materials being used so as not to interfere with the operations of the other Contractors within the limits of the same project. Each Contractor shall join their work with that of others in an acceptable manner and shall perform it in proper sequence to that of the others. CITY will not honor any claim for extra compensation due

to delays, extra work, or extension of time caused by any other Contractors working within the limits of the same project.

## ARTICLE 8 - STATUS OF CITY'S REP AND THE PROJECT DESIGNER DURING CONSTRUCTION

### 8.1 City's Representative

A. The term CITY'S REPRESENTATIVE (CITY REP) refers to the person or firm appointed by CITY to be on the project site daily to oversee the construction on the CITY'S behalf. CITY REP performs those functions of the person sometimes referred to as the "owner's representative," "resident engineer," "resident project representative," "onsite construction manager," or the "construction administrator." Sometimes the CITY REP will be a City employee, sometimes the CITY REP will be the same person or firm that designed the project, i.e., the Project Designer, and sometimes a different architect or engineer, but in any case, the CITY REP will represent the CITY and has only the authority granted by CITY, whether through an employment relationship or through a contract for professional services.

B. CITY may also appoint one person or firm to be CITY REP for certain phases or portions of the Project and another different person or firm to be CITY REP for other phases or portions of the Project. Frequently the CITY REP for that portion of a Project known as the "offsite improvements" will be a City Offsite Inspector.

C. The CITY REP may appoint persons to assist in observing the performance of the Work, and in the performance of the duties of CITY REP but in such case prior permission of CITY must be obtained and CITY shall provide written notice to CONTRACTOR. An assistant to the CITY REP may sometimes be referred to as the Owner's Field or Onsite Representative.

D. The duties and responsibilities and the limitations of authority of CITY REP during construction are set forth in the Contract Documents. Generally, unless otherwise specifically stated in the Contract Documents the CITY REP may perform the following functions:

1) Observe the performance of the Work, inform CITY of the progress of the Work and endeavor to guard CITY against defects and deficiencies in the Work.

2) Arrange, schedule and attend pre-construction conferences, progress meetings and other job conferences as may be required, and notify in advance those who are expected to attend. Prepare and circulate minutes of project meetings including coordination meetings.

3) Review the CONTRACTOR'S Progress Schedules, schedule of Shop Drawings, and other schedules prepared by the CONTRACTOR and determine their acceptability.

4) Review Contractor's initial cost breakdown with Schedule of Values and/or Bid Schedule Unit Price List and with concurrence from the Project Designer recommend approval.

5) Assist CITY in acquiring materials testing laboratory and inspection services.

6) Receive and record the date of receipt, and monitor transmission of Shop Drawings, samples, and test data submitted by the CONTRACTOR, forward the Shop Drawings and other submittals requiring such review to the Project Designer and/or other agencies or persons, receive from the Project Designer such submittals after review and record the date of such receipt, and transmit them back to CONTRACTOR as necessary. All such transmittal dates shall be recorded in the Submittal log.

7) Provide “on-site” observation regarding conformance of the work with the contract documents. Observe and document work and any delays and identify and reject defective or deficient work. Observe and approve or reject construction materials and equipment to determine their general compliance with the Contract Documents.

8) Advise the Project Designer when it is believed Work should be corrected, rejected, uncovered for observations, or requires special tests or inspections.

9) Arrange for CITY instigated inspections and tests (CONTRACTOR shall arrange for general inspections and materials testing.) Verify that tests, equipment and system start-up and operating and maintenance instructions are followed and conducted by the CONTRACTOR in the presence of the appropriate personnel, as required by the Contract Documents, and that the CONTRACTOR maintains adequate records thereof.

10) Observe, record, and report to CITY and the Project Designer, information concerning CITY instigated test procedures and start-ups.

11) Schedule, assist and accompany other City staff, the Project Designer and inspectors representing other agencies having jurisdiction over the Project, visiting the Work Site and record and report the outcome of these inspections.

12) Prepare progress reports.

13) Issue Field Orders.

14) Issue Work Change Directives.

15) Prepare all Change Orders and supplemental agreements in the form and manner approved by the CITY, for authorized alterations to the Work as provided for under the Contract Documents. Recommend to and obtain from CITY approval or denial of Changes to Contract Times or Price.

16) Verify and approve quantities of work put in place during the preceding month as requested in Contractor’s application for payment.

17) Verify Contractor reimbursable field costs, if any, for authorized overtime and time and material work and amount of construction “work in place” completed each month for purpose of Contractor’s application for payment.

18) Investigate and furnish to CITY and the Project Designer information relating to the CONTRACTOR'S claims and furnish CITY with documents, calculations and other information relevant to such claims together with recommendations with regard to payment of such claims.

19) Furnish CITY and the Project Designer with monthly reports as required, of the progress of the Work and of the CONTRACTOR'S compliance with the approved Progress Schedule, schedule of Shop Drawing submissions and other schedules.

20) Review the CONTRACTOR'S Application for Payment and certify that the Work has progressed to the point indicated by the CONTRACTOR, that to the best of the knowledge, information and belief of CITY REP, based on observations and review, the Work is in accordance with the Contract Documents, and that the CONTRACTOR is entitled to the payment of the amount certified.

21) Respond to general RFI’s for general clarification and interpretation and consult, when appropriate with Project Designer or refer RFI to Project Designer for response.

22) Review the Project Designer's interpretation of the Contract Documents for subsequent presentation to Contractor and resolve unanticipated field problems by "on-site" inspections.

23) Maintain orderly files for correspondence, reports or job conferences, Shop Drawing and sample submissions, reproductions of original Contract Documents including Addenda, authorized alterations to the Contract Documents, Change Orders, Field Orders, additional Drawings issued subsequent to the execution of the Contract, clarification letters, and other alterations to the Contract Documents, interpretations of the Contract Documents, progress reports, and other Project related documents.

24) Review Contractor's completion documents.

25) Prepare, with assistance from the Project Designer, punch list items.

26) Recommend to CITY substantial completion.

27) Perform Final Inspection with assistance from the Project Designer.

28) Recommend, with concurrence of the Project Designer, to CITY Final Completion.

29) Issue certificates of completion.

**8.2 The Project Designer**

The duties and responsibilities and the limitations of authority of the Project Designer during construction are set forth in the Contract Documents and shall not be extended without written consent of CITY and the Project Designer. Generally, unless otherwise specifically provided in the Contract Documents, the Project Designer will perform the following functions:

A. Design the Project and prepare all Projects Plans and Specifications.

B. Assist in Bidding, respond to pre-bid questions and requests for clarifications.

C. Attend Pre-bid Conference.

D. Issue any necessary Addenda.

E. Respond to RFI's and as determined necessary by CITY REP, issue such written clarifications or interpretations of the Contract Documents (in the form of Drawings or otherwise) which shall be consistent with or reasonably inferable from the overall intent of the Contract Documents. If CONTRACTOR believes that a written clarification or interpretation justifies an increase in the Contract Price or Contract Time, CONTRACTOR may make a claim therefor as provided in Articles 11 and 12.

F. Correct Design defects.

G. Review and approve Shop Drawings

H. Review Contractor's initial schedule of values cost breakdown and with concurrence from CITY REP recommend approval.

I. Review Construction Progress Schedule and comment on acceptability.

J. Provide advice when requested regarding approval or denial of Changes to Contract Times or Price.

K. In the event of a claim or dispute by CONTRACTOR, interpret the requirements of the Contract Documents and judge the acceptability of the Work thereunder.

L. Assist CITY REP to prepare punch list items.

M. Assist CITY REP with Final inspection.

N. Recommend, with concurrence of CITY REP, to CITY Final Completion.

**8.3 Contractor's Contact For All Communication**

All communication to CITY or to the Project Designer from CONTRACTOR shall be through CITY REP.

**8.4 Rejecting Defective Work**

Both CITY REP and the Project Designer have authority to disapprove or reject Work which they determine to be defective, and also have authority to require special inspection or testing of the Work as provided in Article 13, whether or not the Work is fabricated, installed or completed. Final authority regarding acceptance of Work rests with CITY, who will act after receiving the recommendations of CITY REP and the Project Designer.

**8.5 Limitations on Responsibilities of the Project Designer and/or CITY REP**

A. Neither authority to act granted under this Article or elsewhere in the Contract Documents nor any decision made by CITY REP or the Project Designer in good faith, either to exercise or not exercise such authority, shall give rise to any duty or responsibility of CITY to CONTRACTOR, any Subcontractor, any manufacturer, fabricator, supplier or distributor or any of their agents or employees or any other person performing any of the Work.

B. Whenever in the Contract Documents the terms "as ordered", "as directed", "as required", "as allowed", "as approved" or terms of like effect or import are used, or the adjectives "reasonable", "suitable", "acceptable", "proper", or "satisfactory" or adjectives of like effect or import are used to describe a requirement, direction, review or judgment of CITY REP or the Project Designer as to the Work, it is intended that such requirement, direction, review or judgment will be solely to evaluate the Work for compliance with the Contract Documents (unless there is a specific statement indicating otherwise). The word "provide" shall be understood to mean furnish and install. The use of any such term or adjective never indicates that either the Project Designer or CITY REP shall have authority to supervise or direct performance of the Work or authority to undertake responsibility contrary to the provisions of Paragraphs C and D below.

C. Neither CITY REP nor the Project Designer will be responsible for CONTRACTOR'S means, methods, techniques, sequences or procedures of construction, or the safety precautions and programs incident thereto, and they will not be responsible for CONTRACTOR'S failure to perform the Work in accordance with the Contract documents.

D. Neither CITY REP nor the Project Designer will be responsible for the acts or omissions of CONTRACTOR or of any Subcontractors, or of the agents or employees of any CONTRACTOR or Subcontractor, or of any other person at the site or otherwise performing any of the Work.

## ARTICLE 9 – CONDITIONS OF THE SITE

### 9.1 Dust Control

A. CONTRACTOR shall keep suitable equipment on hand at the job site for maintaining dust control on the project and shall employ appropriate equipment for that purpose, in accordance with the requirements of the "Maricopa County Environmental Services Department Air Pollution Control Regulations".

B. CONTRACTOR, especially if earth-moving operations are involved, shall be responsible for obtaining an Air Quality Permit from Maricopa County prior to starting the work. County permit fees shall be paid for by the CONTRACTOR.

### 9.2 Clean Up

A. CONTRACTOR is responsible for keeping the sidewalks, streets, alleys, and adjacent areas around the Project site free from debris, obstacles, mud, dirt, etc. CONTRACTOR shall immediately and continuously clean up any and all mud or dirt tracked onto streets or sidewalks by construction traffic.

B. During progress of the Work, CONTRACTOR shall keep the premises free from accumulations of waste materials, rubbish and other debris resulting from the Work. Failure of the CONTRACTOR to comply with the CITY REP cleanup orders may result in an order to suspend Work until the condition is corrected. No additional compensation or time will be allowed as a result of such suspension.

C. Excess or unsuitable material, broken asphaltic concrete, and broken portland cement concrete resulting from the construction shall be removed from the project and disposed of by the CONTRACTOR. Disposal of material within the Chandler City Limits or Planning Area must be approved by the CITY REP.

D. Construction silt, mud, and/or debris resulting from construction operation shall be prevented by the CONTRACTOR from being discharged into City storm drains, retention basins or street right-of-way.

E. Earthwork stockpiles are not to exceed 6 feet in height. Any earthwork stockpile, even less than 6 feet, must be removed within seven days of City notification if dust suppression efforts fail to maintain satisfactory airborne contaminant control.

F. At the completion of the Work, CONTRACTOR shall remove all waste materials, rubbish and debris from and about the premises, as well as all tools, appliances, construction equipment and machinery, temporary construction facilities and surplus materials, and shall leave the site clean and ready for occupancy by CITY. CONTRACTOR shall restore to their original condition those portions of the site not designated for alteration by the Contract Documents. CONTRACTOR shall also leave the public right-of-way, all streets, sidewalks, utility easements and any affected private property in a neat and clean condition with all damages including landscaping repaired and restored.

G. If CONTRACTOR is instructed by CITY REP to perform project clean up or street sweeping operations and fails to do so to CITY's satisfaction within two working days, CITY may procure project clean up services and/or commercial street sweeping services and charge such costs including City administrative time to CONTRACTOR.

### 9.3 Repair of landscaped areas and Re-Seeding of Seeded Areas

Any seeded area that has been damaged as a result of construction shall be leveled, raked and re-seeded or re-sodded by the CONTRACTOR at CONTRACTOR'S expense.

### 9.4 Traffic Control

Traffic Control shall be provided as required by the City of Chandler Traffic Barricade Design, Technical Design Manual #7. Any restriction to streets, sidewalks and alleys requires either a Street Closure Permit or permission to close or restrict from the City in accordance with said Technical Design Manual #7.

### 9.5 Property, Rights in Materials

A. Nothing in the Contract shall be construed as vesting in the CONTRACTOR any right of property in the materials used after they have been attached or affixed to the Work or the soil, or after payment has been made for materials delivered to the site of the Work, or stored subject to or under the control of the CITY. All such materials shall become the property of the CITY upon being so attached or affixed or upon payment for materials delivered to the site of the Work or stored subject to or under the control of the CITY.

B. Soil, stone, gravel, and other materials found at the site of the Work and which conform to the Drawings and Specifications for incorporation into the Work may be used in the Work. No other use shall be made of such materials except as may be otherwise described in the Drawings and Specifications.

### 9.6 Access

Access shall be maintained to adjacent properties at all times during construction. Where property has more than one point of access, no more than one access shall be restricted or closed at any one time. Access to adjacent private driveways shall be maintained during all non-working hours.

### 9.7 Notification of Property Owners

All property owners that may be affected by the proposed construction activities shall be notified of the scope, duration of the construction activities and possible interference with their day-to-day activities by CONTRACTOR prior to start of construction. In addition, individual residential or commercial interferences, such as driveway restrictions, water outages, and all other work adjacent to residence/business, require 48-hour notification in advance of specific adjoining work. Notification may be through door hangers or other procedures approved by the CITY.

### 9.8 Construction Signs

A. It shall be the responsibility of CONTRACTOR to furnish and erect construction signs in accordance with Project Specifications. The signs shall be professionally prepared and subject to approval by the CITY REP, shall be maintained by CONTRACTOR for the duration of the project and shall be removed by CONTRACTOR during the final project clean up.

B. The number of signs required, the size, shape, installation requirements and information to be included for construction signs is established on the detail sheet, provided, however, signs will be a minimum of 4 foot by 8 foot and will be installed so that the bottom of the sign is at least 4 foot above grade. No direct payment will be made for furnishing and erecting construction signs. The cost thereof shall be included in other items for which direct payment is made. Sign locations shall be determined by CITY REP.

C. All required construction signs shall be installed by CONTRACTOR within seven days of Notice to Proceed.

### 9.9 Water for Construction Purposes

A. If CONTRACTOR desires to use water from City mains, CONTRACTOR shall make application to the City Finance Department for a fire hydrant meter and pay the required deposit. CONTRACTOR may not take water from City mains until a meter is installed.

Contractor shall pay for such water as billed by the City Utility Department. City will not directly reimburse Contractor for such construction water costs as Contractor's cost should have been included in other unit or lump sum bid prices..

B. For conservation reasons, water flooding of trenches for backfilling purposes using potable water is discouraged.

### 9.10 Relocation of Existing Water Meters

When a service line has been extended and a line setter installed in a meter box, City forces will re-install meter. No compression fittings shall be utilized.

### 9.11 Water Turn-On or Turn-Off

A. CONTRACTOR shall coordinate all water line turn-ons and turn-offs through the CITY REP. Application shall be made to the Municipal Utility Department and CONTRACTOR shall pay the established charges. The City will close existing valves, but will not guarantee a bone-dry Shutdown.

B. CONTRACTOR shall notify all customers affected by the turn-off not less than forty-eight (48) hours in advance. Notification shall be in writing, shall give the reason for the turn-off and shall give the estimated time and duration that water service will be interrupted. CONTRACTOR is also notified that water turn-off will <u>not</u> be permitted on the day before and after Thanksgiving Day and Christmas Day.

C. No direct payment will be made to CONTRACTOR for turn-ons or turn-offs. Costs associated therewith shall be included in other items for which direct payment is made.

## ARTICLE 10 – CONSTRUCTION PHOTOGRAPHS

### 10.1 Pre-construction Video

The CONTRACTOR shall furnish a pre-construction video recording of the entire project site showing the existing conditions of all pavement, concrete, piping, equipment, structures, landscaping, building, and other site features. The pre-construction video shall be in color VHS format. Two (2) copies of the VHS tape(s) shall be submitted to the CITY REP and approved prior to mobilization or initiating any construction activities. The CONTRACTOR shall notify the CITY REP at least 48 hours prior to making the recording so that the CITY REP may accompany the recorder.

### 10.2 Ground Level Construction Photographs

A. The CONTRACTOR shall furnish progress photographs of the project. The photographer selected by the CONTRACTOR shall be approved by the CITY REP and shall be either a commercial photographer or an individual experienced and equipped for such photography. The CONTRACTOR shall submit to the CITY REP three (3) representative prints of photos taken by the selected photographer for approval of the photographer's qualifications prior to taking the first photographs.

B. The CONTRACTOR shall deliver to the CITY REP all negatives and three 4" x 6" color glossy prints of each view of the photographs taking during that period with each application for payment. If the current photographs do not accompany the application, the application shall not be reviewed and shall be returned to the CONTRACTOR as incomplete. The number of photographs required to be taken per each application for payment shall be specified in the Supplementary Conditions for each Project but shall not be less than ten (10) photographs.

C. Processing and reproduction work shall be accomplished in accordance with standard practice to ensure that the negatives and subsequent prints are clear and sharp in detail, of

good tonal quality and uniform in range of density. Photos shall be taken by a 35 mm camera or a 2-1/4" x 2-1/4" format camera and shall be protected in appropriate professional enclosures. The photographs shall be taken at regular intervals which provide a step-by-step progress of each Project area.

D. The negatives and photographs shall be identified by use of typewritten labels affixed to the negative enclosure and to the back of the photograph. The label shall provide a description of the view, the direction from which the photograph was taken, the name of the project, CITY'S project number, the name of CONTRACTOR and the date of the photography. The stationing shall also be included for all pipeline installations.

E. CONTRACTOR shall furnish adjustable, hard-back photo album covers for each set for storage of the mounted photos. Photo albums shall be labeled as to Project title.

**10.3 Aerial Construction Photographs**

A. Unless otherwise specified in the Supplementary Conditions, CONTRACTOR shall engage a professional aerial photographer to photograph the site prior to construction mobilization, at three-month intervals during construction, and following final inspection. The photos shall be taken from two elevations, 1:6400 and 1:3600. The 1:6400 shall center the Project in one 9-inch image. The 1:3600 shall center the Project in two 9-inch images. The 9" square negatives and the following prints shall be provided:

| **Interval** | **Prints** | **Total Prints** |
|---|---|---|
| 3 month intervals | 3 of 9"x9" @ 1:6400 | 9 – 9" x 9" |
| | 3 of each 9"x8" overlapping image @ 1:3600 | Every 3 months |

B. The pilot must be well qualified, possessing a minimum of 250 hours of photographic map flying experience. The photographer shall possess a minimum of 250 hours of experience representing actual time spent in executing vertical aerial photography on photographic assignments. Oblique photography is also considered as qualifying experience.

C. The airplane to be used shall be entirely capable of stable performance at the necessary altitude and air speeds, and shall be equipped with all essential navigational and photographic instruments and accessories, and all maintained in operational condition during the period of the contract. No windows shall be interposed between the camera lens system and the terrain. The camera lens system shall not be in the direct path of any gases or oil from the aircraft engines.

D. All photography shall be made with a single lens precision aerial mapping camera equipped with a "high-resolution, distortion-free type lens," calibrated by the National Bureau of Standards. The calibrated focal length of the lens (the focal length at which the values of lens distortion, irrespective of sign, are held to the minimum within 45 degrees of the optical axis) shall be 153 millimeters, plus or minus 3 millimeters. The camera shall function properly at the necessary altitude and under the expected climatic conditions, and shall expose a 9-inch square negative. The lens-cone shall be so constructed that the lens, focal plane at calibrated focal length, fiducial markers and marginal data markers comprise an integral unit or are otherwise fixed in rigid orientation with one another. Dimensional changes brought about by variations of temperature or other conditions shall not be of such magnitude as would cause deviation from the calibrated focal length in excess of plus or minus 0.05 millimeter or would preclude determination of the principal point location to which plus or minus 0.003 millimeter.

E. All prints shall be made on double weight, semi-matte paper stock. They shall be sharp and clear, shall contain all highlight and shadow detail, and shall be evenly tone. They shall be permanently fixed, thoroughly washed, processed through flattening solution and dried without pressing, rolling, or excessive heating and trimmed to image area.

F. Aerial film will be of a quality that is equal or superior to 4 mil Kodak Aerocolor Negative film 2445 (Ester Base). Only fresh, fine-grained aerial film shall be used. The negatives shall be exposed and developed in such a manner that they shall be sharp and clear, and contain all highlights and shadow detail. They shall be free of any defects which, in the opinion of the CITY REP, render them unsuitable for their intended purpose.

G. Negatives and 9”x9” prints shall be enclosed in plastic enclosures and labeled by use of typewritten labels affixed to the negative enclosure and to the back of the print. The label shall include the name of the Project, CITY’S Project number, the name of CONTRACTOR and the date of the photography. Labels shall also be affixed to the larger prints.

H. CONTRACTOR shall furnish adjustable, hard-back photo album covers for each set of 9”x9” prints for storage. Photo albums shall be labeled as to Project title, CITY’S index number, and of CONTRACTOR.

### 10.4 Procedures

A. Photographic exposures shall be taken during the construction period. CITY REP may vary the specified frequency so that significant progress or changes can be recorded on the photographs.

B. The ground level construction photographs shall be of aesthetic composition and shall depict the progress of the work from the beginning of construction through and including the finished product.

C. All buried piping of greater than four (4) inches in diameter shall be photographed prior to backfill. CITY REP will establish when increased photograph frequency is required, but in no case shall photographs represent sections of new piping installations greater in length than 200 linear feet.

## ARTICLE 11 - CHANGES IN THE WORK

### 11.1 Field Orders

CITY REP may authorize minor changes in the Work not involving an adjustment in the Contract Price or the Contract Times, which are consistent with the overall intent of the Contract Documents. These may be accomplished by a written Field Order on the standard form approved by CITY and executed by CITY REP. Such Field Orders shall be binding on CITY, and also on CONTRACTOR who shall perform the change promptly. If CONTRACTOR believes that a Field Order justifies an increase in the Contract Price or Contract Time, CONTRACTOR may make a claim therefor as provided in Article 12 or Article 13.

### 11.2 Change Order at City’s Request

Without invalidating the Contract, CITY may, at any time or from time to time, order additions, deletions or revisions in the Work. If such addition, deletion or revision will cause a change in the Contract Price or Contract Times, (including to any Milestones), CITY REP using a standard form approved by CITY, will submit a Request for Proposal to CONTRACTOR requesting CONTRACTOR to respond within five (5) days by providing, in writing on the standard form approved by CITY to CITY REP, CONTRACTOR’S proposed time and price changes. Such Proposal shall contain a detailed cost breakdown substantiating all proposed charges and an

explanation for any requested extension to the Contract Times and will also contain the number of days for which the proposal will remain valid.

A. If CITY agrees to the proposal submitted by CONTRACTOR, CITY REP shall, within the time specified in the proposal, obtain the authorized signature of CITY on a Change Order using the standard form approved by CITY and return the executed Change Order to CONTRACTOR for signature by CONTRACTOR.

B. If CITY and CONTRACTOR cannot agree on the changes to the Contract Price and/or Contract Times warranted by the proposed Change Order, CITY may perform any additional work itself, may contract with others to perform any additional work, may order CONTRACTOR to comply with the change to the work and determine the Change in Contract Price in accordance with Article 12 herein, or may determine not to proceed with the proposed Change Order. In such case, where the parties are unable to agree, and CITY desires CONTRACTOR to perform the Change, CITY will issue a Work Change Directive (Change Order executed only by CITY), but noting the appropriate method to determine Contract Price changes, i.e., unit prices, and cost of work based on time and materials as set forth in Article 12, or through alternate dispute resolution pursuant to Article 17 herein. If CONTRACTOR disputes or disagrees with the method noted by CITY and/or if the method selected is through dispute resolution, CONTRACTOR should submit written notice of such dispute to CITY REP within two (2) days of receipt of the Change Order executed by CITY.

C. Upon receipt of the executed Change Order or Work Change Directive, CONTRACTOR shall proceed with the change to the Work involved. All such Work shall be performed under the applicable conditions of the Contract Documents.

### 11.3 No Payment Without Written Authorization

Additional Work performed without authorization of a written executed Change Order or a written executed Field Order will not entitle CONTRACTOR to an increase in the Contract Price or an extension of the Contract Time, except as otherwise specifically provided herein.

### 11.4 No Change Order for Adjusted Quantities

CONTRACTOR is responsible for performing its own independent quantity takeoffs during the bid process. Actual field measured quantities and/or quantities verified by registered land surveyor stamped calculations upon request from the City will be paid to the contractor at the unit rates established in the bid schedule. No adjustment in unit prices will be made for quantities actually used that differs from that shown in the bid proposal. Sections 109.4.1, 109.4.2, and 109.4.3 of “MAG Uniform Standard specifications for Public Works Construction,” as revised in the version adopted in the Chandler City Code, do not apply to this contract.

### 11.5 Notice on Bond

If notice of any changes affecting the general scope of the Work or change in the Contract Price is required by the provisions of any Bond to be given to the surety, it will be CONTRACTOR'S responsibility to notify the surety, and the amount of each applicable Bond shall be adjusted accordingly. CONTRACTOR shall furnish proof of such adjustment to CITY.

## ARTICLE 12 - CHANGE OF CONTRACT PRICE

The Contract Price constitutes the total compensation (subject to authorized adjustments) payable to CONTRACTOR for performing the Work.

### 12.1 Written Document Required to Change

The Contract Price may only be changed by a written Change Order. Any claim for an increase in the Contract Price shall be based on written notice delivered to CITY REP within two (2) days of

the occurrence of the event giving rise to the claim. Notice of the amount of the claim with supporting data shall be delivered as soon as CONTRACTOR can determine the cost but no later than within fifteen (15) days of completion of any additional work required due to such occurrence unless CITY REP allows an additional period of time to ascertain accurate cost data. However, MAG Standard Specifications Section 104.2.2 C) shall be strictly applied.

### 12.2 Value of Work

The value of any Work covered by a Change Order or of any claim for an increase or decrease in the Contract Price shall be determined in one of the ways listed herein:

A. Where the Work involved is covered by unit prices contained in the Contract Documents, by application of unit prices to the quantities of the units involved.

B. By mutual written agreement to a lump sum amount, CONTRACTOR shall furnish an itemized cost breakdown together with supporting data including the quantities used in computing the lump sum.

C. On the basis of the Cost of the Work (determined as provided in Paragraph 12.4) plus a Contractor's Fee for overhead and profit (determined as provided in Paragraph 12.5).

D. Through the use of the alternate dispute resolution process set forth in Article 17 herein.

### 12.3 Work Verification

A. Whenever the cost of any Work is to be determined pursuant to Paragraph 12.4.A and 12.4.B, CONTRACTOR will submit in a form acceptable to CITY REP, daily work sheets showing an itemized labor, material and equipment cost breakdown together with supporting data. No payment will be made for Work not verified by CITY REP.

B. Whenever it is necessary to determine the Cost of the Work because CITY and CONTRACTOR do not agree on an appropriate price for a change in the Work, CITY will incur additional costs to document the time, materials and equipment performed or used at the Site for such Work. CONTRACTOR shall reimburse CITY for all such additional costs to CITY in the event such documenting of time, materials and equipment charges result in a price equal to or less than the amount offered by CITY to CONTRACTOR for such work. CITY'S additional costs will include but not be limited to the cost to CITY for additional time of CITY REP and/or assistants to document CONTRACTOR'S time and materials.

### 12.4 Cost of the Work

A. The term Cost of the Work means the sum of all costs necessarily incurred and paid by CONTRACTOR in the proper performance of the Work. Except as otherwise may be agreed to in writing by CITY, such costs shall be in amounts no higher than those prevailing in the locality of the Project, shall include only the following items and shall not include any of the costs itemized in Paragraph 12.4.B.

   1) Payroll costs for employees in the direct employ of CONTRACTOR in the performance of the Work under schedules of job classifications agreed upon by CITY and CONTRACTOR. Payroll costs for employees not employed full time on the Work shall be apportioned on the basis of their time spent on the Work. Payroll costs shall include, but not be limited to, salaries and wages plus the cost of fringe benefits, which shall include social security contributions, unemployment, excise and payroll taxes, workers' compensation, health and retirement benefits, sick leave, vacation and holiday pay applicable thereto. The expenses of performing Work after regular working hours, on Saturday, Sunday or legal holidays shall be included in the above only to the extent authorized in writing by CITY.

2) Cost of all materials and equipment furnished and incorporated in the Work, including costs of transportation and storage thereof, and manufacturers' field services required in connection therewith. All cash discounts shall accrue to CONTRACTOR unless CITY deposits funds with CONTRACTOR with which to make payments, in which case the cash discounts shall accrue to CITY. All trade discounts, rebates and refunds, and all returns from sale of surplus materials and equipment shall accrue to CITY, and CONTRACTOR shall make provisions so that they may be obtained.

3) Payment made by CONTRACTOR to the Subcontractors for Work performed by Subcontractors. If required by CITY, CONTRACTOR shall obtain competitive bids from Subcontractors acceptable to CONTRACTOR and shall deliver such bids to CITY who will then determine which bids will be accepted. If a Subcontractor provides that the Subcontractor is to be paid on the basis of Cost of the Work Plus a Fee, the Subcontractor's Cost of the Work shall be determined in the same manner as CONTRACTOR'S Cost of the Work except as modified herein. All subcontracts shall be subject to the other provisions of the Contract Documents insofar as applicable.

4) Costs of special consultants (including, but not limited to, engineers, architects, testing laboratories, surveyors, lawyers and accountants) employed for services specifically related to the Work.

5) Supplemental costs including the following:

   a. The proportion of necessary transportation, travel and subsistence expenses of CONTRACTOR'S employees incurred in discharge of duties connected with the Work.

   b. Cost, including transportation and maintenance, of all materials, supplies, equipment, machinery, appliances, office and temporary facilities at the site and hand tools not owned by the workmen, and which are consumed in the performance of the Work, and cost less market value of each item used, but not consumed, which remain the property of CONTRACTOR.

   c. Rentals of all construction equipment and machinery and the parts thereof whether rented from CONTRACTOR or others in accordance with rental agreements approved by CITY, and the costs of transportation, loading, unloading, installation, dismantling and removal thereof -- all in accordance with terms of said rental agreements. The rental of any such equipment, machinery or parts shall cease when the use thereof is no longer necessary for the Work. The “Rental Rate Blue Book for Construction Equipment” published by Primedia Information, Inc., (Dataquest Blue Book) shall be used to determine hourly equipment rates (without operators) for Actual Cost Work (MAG 109.5.1 modification) in accordance with the following formula:

      HERR = f X [(Monthly Rate)/ 176] + HOC,

      Where:

      Monthly rate = Blue Book Monthly Rate, Adjusted with Factor for Blue Book Equipment Year of Manufacture

      HERR = The Hourly Equipment Rental Rate

      F = Regional Climate Adjustment Factor = 0.9 (for all Equipment)

      HOC = Blue Book Hourly Operating Cost

Overhead and profit are included in the above established equipment hourly rate that CITY will be compensating CONTRACTOR for actual cost work. Equipment hours will be recorded to the nearest one-half hour.

Standby equipment time for equipment not operating to perform change order work and when equipment cannot be used elsewhere for other contract work shall be calculated as follows:

SBR = F x (MERR/176) x ½,
Where
SBR = Standby Equipment Rate
F = Regional Climate Adjustment Factor = 0.9 (For All Equipment)
MERR = Blue Book Monthly Equipment Rental Rate, Adjusted With Factor for Blue Book Equipment Year of Manufacture

Overhead and profit are included in the above established equipment hourly rate that the City will be compensating the contractor for actual cost work. Equipment hours will be recorded to the nearest one-half hour.

When double or triple shifting is required, the following equipment rates shall apply:

**Double Shift** (16 Hours/Day): The first 8-Hour shift shall be at the rates established above. The second 8-Hour shift shall be at 50% of the hourly rate established for one 8-Hour shift.

**Triple Shift** (24 Hours/Day): The first two 8-Hour shifts shall be at the rates established above. The third 8-Hour shift shall be at 50% of the hourly rate established for the second 8-Hour shift.

For all actual cost work, payment for “stand-by” will be limited to not more than eight hours in a 24-hour day or 40 hours in a normal week. No compensation shall be allowed for equipment that is inoperable due to breakdown or with equipment utilization on work other than the actual cost work for which compensation is being tracked. In addition, no payment shall be allowed for equipment that is not operating because work has been suspended by the contractor for the contractor’s reasons. Leased equipment expenses will be compensated as specified in ADOT Specifications, Section 109.04(D)(3)(c). Transportation, freight time and/or other costs including overhead and profit on leased equipment will not be included as part of the actual cost change order work compensation.

d. Sales, user or similar taxes related to the Work, and for which CONTRACTOR is liable, imposed by any governmental authority.

e. Deposits lost for causes other than CONTRACTOR'S negligence, royalty payments and fees for permits and licenses.

f. Losses and damages (and related expenses), not compensated by insurance or otherwise, to the Work or otherwise sustained by CONTRACTOR in connection with the execution of the Work, provided they have resulted from causes other than the negligence of CONTRACTOR, any Subcontractor, or anyone directly or indirectly employed by any of them or for whose acts any of them may be liable. Such losses shall include settlements made with the written consent and approval of CITY. No such losses, damages and expenses shall be included in the Cost of the Work for the purpose of determining CONTRACTOR'S Fee. If, however, any such loss or damage requires reconstruction and CONTRACTOR is placed in charge thereof,

CONTRACTOR shall be paid for services a fee proportionate to that stated in Paragraph 12.5.

g. The cost of utilities, fuel and sanitary facilities at the site associated with the additional work.

h. Cost of premiums for additional Bonds and insurance required because of changes in the Work.

B. The term **Cost of the Work** shall not include any of the following:

1) Payroll costs and other compensation of CONTRACTOR'S officers, executives, principals (of partnership and sole proprietorships), general managers, engineers, architects, estimators, lawyers, auditors, accountants, purchasing and contracting agents, expediters, timekeepers, clerks and other personnel employed by CONTRACTOR, whether at the site or in CONTRACTOR'S principal or a branch office for general administration of the Work, and not specifically included in the agreed upon schedule of job classifications referred to in Paragraph 12.4.A.1 -- all of which are to be considered administrative costs covered by the CONTRACTOR'S Fee.

2) Expenses of CONTRACTOR'S principal and branch offices other than CONTRACTOR'S office at the site.

3) Any part of CONTRACTOR'S capital expenses, including interest on CONTRACTOR'S capital employed for the Work and charges against CONTRACTOR for delinquent payments.

4) Cost of premiums for all Bonds and for all insurance whether or not CONTRACTOR is required by the Contract Documents to purchase and maintain the same (except for additional Bonds and insurance required because of changes in the Work).

5) Costs due to the negligence of CONTRACTOR, any Subcontractor, or anyone directly or indirectly employed by any of them or for whose acts any of them may be liable, including but not limited to, the correction of defective Work, disposal of materials or equipment wrongly supplied and making good any damage to property.

6) Other overhead or general expense costs of any kind and the costs of any item not specifically and expressly included in Paragraph 12.4.A.

**12.5 Contractor's Fee**

The CONTRACTOR'S Fee allowed to CONTRACTOR for overhead and profit shall be determined in accordance with MAG Specifications Section 109.5 except as modified herein for "actual cost work" and as follows:

A. A mutually acceptable fixed fee.

B. If a mutually acceptable fixed fee cannot be agreed upon, the fee will be based on the following portions of the cost of work:

1) For costs incurred under Paragraphs 12.4.A.1 and 12.4.A.2, the CONTRACTOR'S Fee shall not exceed a total of fifteen percent (ten percent for overhead and five percent for profit). CITY reserves the right to furnish materials and equipment as CITY deems advisable, and the CONTRACTOR will not be paid the CONTRACTOR'S Fee for such materials and equipment.

2) For costs incurred under Paragraph 12.4.A.3, the CONTRACTOR'S Fee shall not exceed a total of five percent; and if a subcontract is on the basis of Cost of the Work Plus a Fee, the maximum allowable to the Subcontractor as a fee for overhead and profit shall not exceed a total of fifteen percent.

3) No fee shall be payable on the basis of costs itemized under Paragraph 12.4.A.4, 12.4.A.5 and 12.4.B.

4) The amount of credit to be allowed by CONTRACTOR to CITY for any such change which results in a net decrease in cost, will be the amount of the net decrease plus a deduction in CONTRACTOR'S Fee by an amount equal to ten percent of the net decrease.

5) When both additions and credits are involved in any one change, the adjustment in CONTRACTOR'S Fee shall be computed on the basis of the net change in the Contract Price.

### 12.6 Cash Allowances

It is understood that CONTRACTOR has included in the Contract Price all allowances so named in the Contract Documents and shall cause the Work so covered to be done by such Subcontractors, manufacturers, fabricators, suppliers or distributors and for such sums within the limit of the allowances as may be acceptable to CITY. Upon final payment, the Contract Price shall be adjusted as required and an appropriate Change Order issued. CONTRACTOR agrees that the original Contract Price includes such sums as CONTRACTOR deems proper for costs and profit on account of cash allowances. No demand for additional cost or profit in connection therewith will be allowed.

### 12.7 Hindrances and Delays

A. Except as provided in Paragraph B, below, no increase in the contract price nor additional payment shall be paid nor due to CONTRACTOR for hindrances or delays from any cause during the progress of any portion of the work included in this Contract; but such delays may entitle CONTRACTOR to an extension of the Contract Time in accordance with the provisions of Article 13 hereof.

B. The parties agree to negotiate for the recovery of damages related to expenses actually incurred by the Contractor for a delay under the following circumstances:
   1) If the CITY is solely responsible for the delay which is unreasonable under the circumstances, and
   2) Which delay was not within the contemplation of the parties and was not foreseeable at the time the Contract was entered into, and
   3) The CONTRACTOR can show the impact of the delay on the critical path as indicated on the approved Construction Progress Schedule.

   The maximum compensation for any delay meeting the above requirements shall not exceed the daily amount specified for liquidated damages by the then current version of “MAG Uniform Standard specifications for Public Works Construction.”

## ARTICLE 13 - CHANGE OF THE CONTRACT TIMES

### 13.1 Written Document Required

The Contract Times, including any Milestones, may only be changed by a written Change Order. Any claim for any extension in the Contract Time shall be based on written notice delivered to CITY within two (2) days of the occurrence or the event giving rise to the claim. Notice of the extent of the claim with supporting data shall be delivered within fifteen (15) days of the

conclusion of such occurrence unless CITY REP allows, in writing, an additional period of time to ascertain more accurate data.

A. Notice of the extent of the claim must state the amount of additional time requested, the cause of the delay and its impact on critical path work items, the date of the occurrence causing the delay, and must include all other evidence reasonably available or known to the CONTRACTOR which would support the extension of time requested. Minimum required supporting data/criteria will include CPM computer software print outs at acceptable time periods as required by City staff to show the true schedule impact during the delay period.

B. Requests for extensions of time failing to include the information specified in this Article and requests for extensions of time which are not received within the time specified above, shall result in the forfeiture of the CONTRACTOR'S right to receive any extension of time requested.

C. Acceptance of the daily reports by CITY REP shall not be deemed an admission of the CONTRACTOR'S right to receive an extension of time or a waiver of the CITY'S right to strictly enforce the time provisions contained in the Contract Documents.

D. If CONTRACTOR and CITY REP are unable to agree on CONTRACTOR'S request for an extension of time, the dispute shall be resolved through the alternate dispute resolution process provided herein.

### 13.2 Delays Beyond Contractor's Control

Where CONTRACTOR is prevented from completing any critical path work items within the Contract Times (or Milestones) due to delay beyond the control of CONTRACTOR, the Contract Times (or Milestones) will be extended if a claim is made therefor, as provided herein. Delays beyond the control of CONTRACTOR shall include, but not be limited to, acts or neglect by CITY, fires, floods, labor strikes, epidemics, abnormal weather conditions, or acts of God.

### 13.3 Delays Within Contractor's Control

The Contract Times (or Milestones) will not be extended due to delays within the control of CONTRACTOR. Delays attributable to and within the control of a Subcontractor or Supplier shall be deemed to be delays within the control of CONTRACTOR.

### 13.4 Delays Beyond City's and Contractor's Control

Where CONTRACTOR is prevented from completing any part of the Work within the Contract Times (or Milestones) due to delay beyond the control of both CITY and CONTRACTOR, an extension of the Contract Times (or Milestones) in an amount equal to the time lost due to such delay shall be CONTRACTOR'S sole and exclusive remedy for such delay. No change to the Contract Price for extended overhead nor any other costs will be granted for delays beyond CITY'S control.

### 13.5 Rain

Time extensions for rain may be granted only for conditions <u>in excess</u> of normal rainfall, which impacts ongoing activities at the site that have successive following activities that must be accomplished in a required sequence for completion of the project within the specified period. These would be generally labeled as Critical Path Activities. For the purposes of this contract, normal weather conditions, such as average days of rain per month, will be determined by meteorological data obtained from the National Weather Service for station 021514, CHANDLER HEIGHTS, ARIZONA. When it is established that rain in excess of normal rainfall justifies a time extension, a no cost time extension will be granted by the City. The contractor is expected and may be directed to perform other work on the project not effected by heavy rains.

## ARTICLE 14 - WARRANTY AND GUARANTEE; TESTS AND INSPECTIONS; CORRECTION, REMOVAL OR ACCEPTANCE OF DEFECTIVE WORK

### 14.1 Notice of Defects

Prompt written notice of all defective Work of which CITY, CITY REP or the Project Designer have actual knowledge will be given to CONTRACTOR. All defective Work may be rejected, corrected, or accepted as provided herein.

### 14.2 Access to Work

CITY, CITY REP and the Project Designer and agents of each of them, testing agencies and governmental agencies with jurisdictional interests shall be provided access to the Work at reasonable times for their observation, inspection and testing. CONTRACTOR shall provide proper and safe conditions for such access.

### 14.3 Tests and Inspections

A. CONTRACTOR shall give CITY REP timely (at a minimum, twenty-four hours) notice of readiness of the Work for all required inspections, tests or approvals. CONTRACTOR shall give timely notice to CITY REP in advance of backfilling or otherwise covering any part of the Work so that CITY REP may, if desired, observe such part of the Work before it is concealed. Whenever CONTRACTOR varies the normal period during which Work or any portion of it is carried on each day, CONTRACTOR shall give timely notice to CITY REP so that CITY REP may, if desired, be present to observe the Work in progress. If CONTRACTOR fails to give such timely notice, any Work done in the absence of CITY REP will be subject to rejection. If CONTRACTOR gives such notice to CITY REP, but then is not ready for such inspections, tests, approvals or observations at the time so noticed, CONTRACTOR shall reimburse CITY for all costs incurred by the attendance of CITY REP or other CITY representatives.

B. If any law, ordinance, rule, regulation, code, or orders of any public body having jurisdiction requires any Work (or part thereof) to be inspected, tested or approved, CONTRACTOR (unless another party is specified in the Contract Documents) shall assume full responsibility therefor, pay all costs in connection therewith and furnish CITY REP the required certificates of inspection, testing, or approval. CONTRACTOR shall also be responsible for and shall pay all costs in connection with any inspection or testing required by the Specifications in connection with CITY'S acceptance of a manufacturer, fabricator, supplier or distributor of materials or equipment proposed to be incorporated in the Work, or of materials or equipment submitted for approval prior to CONTRACTOR'S purchase thereof for incorporation in the Work. The cost of all other inspections, tests and approvals required by the Contract Documents shall be paid by CITY (unless otherwise specified).

C. All inspections, tests or approvals other than those required by law, ordinance, rule, regulation, code or order of any public body having jurisdiction shall be performed by organizations acceptable to CITY and by the Project Designer if so specified.

D. Neither observations by CITY REP, the Project Designer nor inspections, tests or approvals by others shall relieve CONTRACTOR from their obligations to perform the Work in accordance with the Contract Documents.

### 14.4 Uncovering Work

A. If any Work that is to be observed, inspected, tested or approved is covered without written concurrence of CITY REP, it must, if requested by CITY REP be uncovered for observation. Unless CONTRACTOR has given CITY REP timely notice of CONTRACTOR'S intention to cover such Work and CITY REP has not acted with reasonable promptness in response to such notice, CONTRACTOR shall furnish all necessary labor, material and bear all the expenses of such uncovering, exposure, observation, inspection and testing and of

satisfactory reconstruction, including compensation for additional professional services, and an appropriate deductive Change Order shall be issued.

B. If CITY REP considers it necessary or advisable that Work covered with the concurrence of CITY REP or Work covered after CITY REP failed to act with reasonable promptness in response to a written notice from CONTRACTOR, be observed, inspected or tested by CITY REP or others, CONTRACTOR, at CITY REP'S request, shall uncover, expose or otherwise make available for observation, inspection or testing as CITY REP may require, that portion of the Work in question and CONTRACTOR shall bear all costs. If, however, such Work is not found to be defective, CONTRACTOR shall be allowed an increase in the Contract Price or an extension of the Contract Time, or both, directly attributable to such uncovering, exposure, observation, inspection, testing and reconstruction if CONTRACTOR makes a claim therefor as provided in Articles 11 and 12.

### 14.5 City May Stop the Work

If the Work is defective, or CONTRACTOR fails to supply sufficient skilled workmen or suitable materials or equipment, CITY may order CONTRACTOR to stop the Work, or any portion thereof, until the cause for such order has been eliminated; however, this right of CITY to stop the Work shall not give rise to any duty on the part of CITY to exercise this right for the benefit of CONTRACTOR or any other party.

### 14.6 Correction or Removal of Defective Work

A. If required by CITY REP, CONTRACTOR shall promptly, without cost to CITY and as specified by CITY REP, either correct any defective Work, whether or not fabricated, installed or completed, or, if the Work has been rejected by CITY, remove it from the site and replace it with non-defective Work. CONTRACTOR shall correct any Work which may be displaced in correcting, removing or replacing defective Work. No compensation will be allowed CONTRACTOR for such removal, replacement or remedial Work. CONTRACTOR shall reimburse CITY for costs incurred by CITY due to such correction or removal including but not limited to additional expenses for inspection, testing or observation and/or for repeated reviews by the CITY REP or Project Designer.

B. Upon failure on the part of the CONTRACTOR to comply within a reasonably prompt time with any written order of CITY REP to correct or remove defective Work, CITY REP shall have authority to cause nonconforming materials or rejected Work to be remedied, removed, or replaced at the CONTRACTOR'S expense and to deduct the costs from any moneys due or to become due the CONTRACTOR.

### 14.7 Correction Period - One Year Guarantee

A. If, within one year after the date of the Certificate of Final Acceptance, or such longer period of time as may be prescribed by law or by the terms of any applicable special guarantee required by the Contract Documents, or by any specific provision of the Contract Documents, any Work is found to be defective, CONTRACTOR shall promptly, without cost to CITY and in accordance with CITY'S written instructions, either correct such defective Work, or, if it has been rejected by CITY, remove it from the site and replace it with non-defective Work. If CONTRACTOR does not promptly comply with the terms of such instructions, or in an emergency where delay would cause serious risk of loss or damage, CITY may have the defective Work corrected or the rejected Work removed and replaced, and all direct and indirect costs of such removal and replacement, including compensation for additional professional services, shall be paid by CONTRACTOR. Such action by the CITY will not relieve the CONTRACTOR of the guarantees required by this Article or elsewhere in the Contract Documents.

B. If, in the opinion of the CITY, defective Work creates a dangerous condition or requires immediate correction or attention to prevent further loss to the CITY or to prevent interruption of operation of the CITY, the CITY will attempt to give the notice required by this Article. If the CONTRACTOR cannot be contacted or does not comply with the CITY'S request for correction within a reasonable time as determined by the CITY, the CITY may, notwithstanding the provisions of this Article, proceed to make such correction or provide such attention; and the costs of such correction or attention shall be charged against the CONTRACTOR. Such action by the CITY will not relieve the CONTRACTOR of the guarantees required by this Article or elsewhere in the Contract Documents.

C. This Article does not in any way limit the guarantee on any items for which a longer guarantee is specified or on any items for which a manufacturer or supplier gives a guarantee for a longer period. The CONTRACTOR agrees to act as co-guarantor with such manufacturer or supplier and shall furnish the CITY all appropriate guarantee or warranty certificates upon completion of the Project. No guarantee period, whether provided for in this Article or elsewhere, shall in any way limit the liability of CONTRACTOR or their sureties or insurers under the indemnity or insurance provisions of these General Conditions and the Supplementary Conditions.

### 14.8 Acceptance of Defective Work

A. If, instead of requiring correction or removal and replacement of defective Work, CITY prefers to accept it, CITY may do so. If any such acceptance occurs prior to final payment, a Change Order shall be issued incorporating the necessary revisions in the Contract Documents, including appropriate reduction in the Contract Price; or, if the acceptance occurs after final payment, an appropriate amount shall be paid by CONTRACTOR to CITY.

B. CITY may require CONTRACTOR to furnish at CONTRACTOR'S expense, a special performance guarantee or other surety prior to acceptance of defective work.

### 14.9 City May Correct Defective Work

If CONTRACTOR fails within a reasonable time after written notice of CITY REP to proceed to correct defective Work or to remove and replace rejected Work as required by CITY in accordance with Paragraph 14.6, or if CONTRACTOR fails to perform the Work in accordance with the Contract Documents (including any requirements of the progress schedule), CITY may, after seven days' written notice to CONTRACTOR, correct and remedy any such deficiency. In exercising CITY'S rights under this Paragraph, CITY shall proceed expeditiously. To the extent necessary to complete corrective and remedial action, CITY may exclude CONTRACTOR from all or part of the Work, and suspend CONTRACTOR'S services related thereto, take possession of CONTRACTOR'S tools, appliances, construction equipment and machinery at the site and incorporate in the Work all materials and equipment stored at the site or for which CITY has paid CONTRACTOR, but which are stored elsewhere. CONTRACTOR shall allow CITY, CITY REP, agents and employees such access to the site as may be necessary to enable CITY to exercise CITY'S rights under this Paragraph. All direct and indirect costs of CITY in exercising such rights shall be charged against CONTRACTOR in an amount verified by CITY REP, and a Change Order shall be issued incorporating the necessary revisions in the Contract Documents and a reduction in the Contract Price. Such direct and indirect costs shall include, in particular but without limitation, compensation for additional professional services required and all costs of repair and replacement of work or others destroyed or damaged by correction, removal or replacement of CONTRACTOR'S defective work. CONTRACTOR shall not be allowed an extension of the Contract Time because of any delay in CONTRACTOR'S performance of the Work attributable to the exercise by CITY or CITY'S rights hereunder.

### 14.10 Correction or Removal of Unauthorized Work

A. Any Work done beyond the lines and grades shown on the Drawings or established by the Project Designer or any changes in, additions to, or deductions from the Work done without written authority will be considered as unauthorized and will not be paid for. Work so done may be ordered remedied, removed, or replaced at the CONTRACTOR'S expense.

B. Upon failure on the part of the CONTRACTOR to comply promptly with any order of the CITY REP, CITY shall have authority to cause unauthorized Work to be remedied, removed, or replaced at the CONTRACTOR'S expense and to deduct the costs from any moneys due or to become due the CONTRACTOR.

## ARTICLE 15 - PAYMENTS TO CONTRACTOR AND COMPLETION

### 15.1 Schedule of Values

The Schedule of Values established as provided in Paragraph 2.7 will serve as the basis for progress payments and will be incorporated into a form of Application for Payment acceptable to CITY REP. Progress payments on account of Unit Price Work will be based on the number of units completed.

### 15.2 Application for Progress Payment

A. On or before the first day of each calendar month after actual construction is started (but not more often than once a month), CONTRACTOR shall submit to CITY REP for review a completed Application for Payment signed by CONTRACTOR, covering the Work completed as of the date of the Application and accompanied by such supporting documentation as is required by the Contract Documents and also as CITY REP may reasonably require. An Application for Payment will not be considered complete unless it is accompanied by an updated Construction Progress Schedule and a certification that the on-site, red lined, as built drawings are up to date. If payment is requested on the basis of materials and equipment not incorporated in the Work but delivered and suitably, securely stored at the site or at another location (such as a bonded warehouse) agreed to in writing, the Application for Payment shall also be accompanied by such data, satisfactory to CITY, as will establish CITY'S title to the material and equipment and protect CITY'S interest therein, including applicable insurance. Each subsequent Application for Payment shall include an affidavit of CONTRACTOR stating that all previous progress payments received on account of the Work have been applied to discharge in full all of CONTRACTOR'S obligations reflected in prior Applications for Payment.

B. Applications for Payment may only be submitted to that specific person named in the Contract as the CITY REP, and not to any other agent or representative of CITY, nor to the Project Designer.

C. The amount of retainage with respect to progress payments will be as stipulated in the Contract and will be in accordance with state law.

### 15.3 Contractor’s Warranty of Title

A. CONTRACTOR warrants and guarantees that title to all Work, materials and equipment covered by any Application for Payment, whether incorporated in the Project or not, will pass to CITY at the time of payment, free and clear of all liens, claims, security interests and encumbrances (hereafter in these General Conditions referred to as "Liens"), provided that this shall not preclude the CONTRACTOR from installing metering devices or other equipment of utility companies or municipalities, the title of which is commonly retained by the utility company or municipality.

B. No materials, supplies, or equipment for the Work under this Contract shall be purchased subject to any chattel mortgage or under a conditional sale contract or other agreement by which an interest therein, or any part thereof, is retained by the seller or supplier.

C. Nothing contained in this Article shall defeat or impair the right of such persons furnishing materials or labor under any bond given by the CONTRACTOR for their protection, or any right under any law permitting such persons to look to funds due the CONTRACTOR in the hands of the CITY. The provisions of this Article shall be inserted in all subcontracts and material contracts, and notices of its provision shall be given to all persons furnishing materials for the Work when no formal contract is entered into for such materials.

**15.4 Review of Applications for Progress Payments**

A. An Application for Payment will be deemed approved and certified for payment after seven (7) days from the date of submission by CONTRACTOR unless CITY REP, on or before the expiration of such seven days, prepares and issues to CONTRACTOR a specific written finding setting forth those items in detail in the Application for Payment that are not approved for payment under the Contract. CITY may withhold an amount from the progress payment sufficient to pay the expenses CITY reasonably expects to incur in correcting any deficiencies set forth in the written finding.

B. Progress Payments shall be paid on or before fourteen (14) days after the Application for Payment is certified and approved.

C. Within five (5) work days after receipt of each Application for Payment, CITY REP with advice and assistance from the Project Designer, shall either provide to CITY a written recommendation for payment, or return the Application to CONTRACTOR indicating in writing CITY REP'S reasons for refusing to recommend payment. In the latter case, CONTRACTOR may make the necessary corrections and resubmit the Application.

D. The recommendation of Project Designer and CITY REP for payment of any amounts requested in an Application for Payment will constitute a representation by them and each of them to CITY, based on on-site observations of the Work in progress as experienced and qualified design and construction professionals, and based on their review of the Application for Payment and the accompanying data and schedules, that the Work has progressed to the point indicated; that, to the best of their knowledge, information and belief, the quality of the Work is in accordance with the Contract Documents (subject to an evaluation of the Work as a functioning Project upon Substantial Completion, to the results of any subsequent tests called for in the Contract Documents and any qualifications stated in the recommendation); and that CONTRACTOR is entitled to payment of the amount recommended. However, by recommending any such payment, neither CITY REP nor the Project Designer will thereby be deemed to have represented that exhaustive or continuous on-site inspections have been made to check the quality or the quantity of the Work, or that the means, methods, techniques, sequences, and procedures of construction have been reviewed, or that any examination has been made to ascertain how or for what purpose CONTRACTOR has used the money's paid or to be paid to CONTRACTOR on account of the Contract Price, or that title to any Work, materials or equipment has passed to CITY free and clear of any Liens.

E. The recommendation by the Project Designer and CITY REP for final payment will constitute an additional representation by them and each of them to CITY that the conditions precedent to CONTRACTOR'S being entitled to final payment as set forth in Paragraph 15.9 have been fulfilled.

F. The Project Designer and CITY REP may refuse to recommend the whole or any part of any payment if, in either of their opinions, it would be incorrect to make such representations to CITY. They may also refuse to recommend any such payment, or because of subsequently

discovered evidence or the results of subsequent inspections or tests, nullify any such payment previously recommended, to such extent as may be necessary in their opinion to protect CITY from loss because:

1) The Work is defective, or completed Work has been damaged requiring correction or replacement.

2) Written claims have been made against CITY or Liens have been filed in connection with the Work.

3) The Contract Price has been reduced because of Modifications.

4) CITY has been required to correct defective Work or complete the Work in accordance with Paragraph 14.9.

5) CONTRACTOR'S unsatisfactory prosecution of the Work in accordance with the Contract Documents.

6) CONTRACTOR'S failure to make payment to Subcontractors for labor, materials or equipment.

**15.5 Substantial Completion**

A. When CONTRACTOR considers the entire Work ready for its intended use, CONTRACTOR shall notify CITY REP, in writing, that the entire Work is substantially complete (except for items specifically listed by CONTRACTOR as incomplete) and request that CITY REP issue a certificate of Substantial Completion. Promptly thereafter, CITY REP and the Project Designer shall make an inspection of the Work to determine the status of completion. If CITY does not consider the Work substantially complete, CITY REP will notify CONTRACTOR in writing giving reasons therefor. If CITY considers the Work substantially complete, CITY REP, with the concurrence of CITY and assistance from the Project Designer, will prepare a list (punch list) of items to be completed or corrected before final acceptance and a certificate of Substantial Completion and shall fix the date of Substantial Completion. The list of items to be completed or corrected shall be attached to the certificate of Substantial Completion when it is issued to CONTRACTOR. At the time of delivery of the certificate and list, CITY REP will also deliver to CONTRACTOR a written recommendation as to a division of responsibilities pending final payment between CITY and CONTRACTOR with respect to security, operation, safety, maintenance, heat, utilities and insurance. Unless and until CONTRACTOR and CITY agree otherwise in writing, this recommendation shall be binding on CITY and CONTRACTOR.

B. CITY shall have the right to exclude CONTRACTOR from the Work after the date of Substantial Completion, but CITY shall allow CONTRACTOR reasonable access to complete or correct items on the punch list.

**15.6 Partial Utilization**

A. CITY at CITY'S option may use and occupy any substantially completed parts of the Work which has specifically been identified in the Contract Documents, or which CITY, the Project Designer and CONTRACTOR agree constitutes a separately functioning and usable part of the Work that can be used by CITY for its intended purpose, without significant interference with CONTRACTOR'S performance of the remainder of the Work, provided, however, if the portion of the Work to be used or occupied has not been found to be substantially complete, CITY must do so in accordance with Paragraph 15.5 prior to such occupancy.

B. In lieu of the issuance of a Certificate of Substantial Completion as to part of the Work, CITY may take over operation of a facility constituting part of the Work whether or not it is

substantially complete if such facility is functionally and separately usable; provided that prior to any such takeover, CITY and CONTRACTOR agree in writing as to the division of responsibilities between CITY and CONTRACTOR for security, operation, safety, maintenance, correction period, heat, utilities and insurance with respect to such facility.

C. Substantial completion of or CITY'S beneficial occupancy of a part of the project will not alter the fact that the one year warranty for the whole project starts at the date of Final Completion of the whole project.

### 15.7 Final Inspection

A. Upon written notice from CONTRACTOR that the Work is complete, CITY REP and the Project Designer will make a final inspection with CONTRACTOR and will provide written notice to CONTRACTOR of all items of Work which are incomplete or defective. CONTRACTOR shall immediately take such measures as are necessary to remedy such deficiencies.

B. The release of the retention monies will be no earlier than the completion of all such deficiencies.

### 15.8 Final Application for Payment

A. After CONTRACTOR has corrected all such deficiencies and completed all such corrections to the satisfaction of CITY and delivered all maintenance and operating instructions, schedules, guarantees, bonds, certificates of inspection, marked up record documents, and other documents, all as required by the Contract Documents, and after the Project Designer has indicated that the Work is acceptable (subject to the provisions of Paragraph 15.9) CONTRACTOR may make application for final payment following the procedure for progress payments. The final Application for Payment shall be accompanied by all documentation called for in the Contract Documents and such other data and schedules as CITY REP may reasonably require, together with complete and legally effective releases or waivers (satisfactory to CITY) of all Liens arising out of or filed in connection with the Work.

B. The final Application for Payment must be accompanied by a completed Contractor's Affidavit Regarding Settlement of Claims, the form for which is included in the Contract Documents. The affidavit serves to indemnify and save harmless the CITY against any and all liens for labor, services, material and equipment for which a Lien could be filed, and that all payrolls, material and equipment bills, and other indebtedness connected with the Work for which CITY or CITY'S property might in any way be responsible, have been paid or otherwise satisfied. If any Subcontractor, manufacturer, fabricator, supplier or distributor fails to furnish a release or receipt in full, CONTRACTOR may furnish a Bond or other collateral satisfactory to CITY to indemnify CITY against any Lien.

C. The final Application for Payment must also be accompanied by the completed on-site, red line, as-built drawings showing all construction as it was in actual fact constructed and installed.

D. The final Application for Payment must also be accompanied by a completed Certificate of Completion, the form for which is included in the Contract Documents. This document certifies that all goods and/or services required by the Contract have been delivered in accordance with the Contract, and all activities required by the Contractor under the Contract have been completed.

### 15.9 Final Payment and Acceptance

A. If, on the basis of observation of the Work by CITY REP during construction and final inspection and review of the final Application for Payment and accompanying documentation

by CITY REP and the Project Designer, all as required by the Contract Documents, CITY is satisfied that the Work has been completed and CONTRACTOR has fulfilled all of its obligations under the Contract Documents, CITY REP, with the concurrence and assistance of the Project Designer, shall within ten days after receipt of the final Application for Payment, indicate in writing a recommendation for payment and present the Application to CITY for payment. Thereupon, the Project Designer will give written notice to CITY and CONTRACTOR that the Work is acceptable subject to the provisions of Paragraph 15.8. Otherwise, CITY REP will return the Application to CONTRACTOR indicating in writing the reasons for refusing to recommend final payment, in which case CONTRACTOR shall make the necessary corrections and resubmit the Application. If the Application and accompanying documentation are appropriate as to form and substance, and the CITY finds the Work has been completed according to the Contract, the CITY shall accept the Work, shall file a notice of completion, and shall pay the entire sum so found to be due as recommended by the CITY REP, after deducting therefrom all previous payments and all amounts to be retained under the provisions of the Contract. All prior progress estimates and payments shall be subject to correction in the final estimate and payment. The final payment shall be due and payable within sixty (60) days from the date of filing a notice of completion of the Work by the CITY.

B. If, through no fault of CONTRACTOR, final completion is materially delayed and if CITY REP so confirms, CITY shall, upon receipt of CONTRACTOR'S final Application for Payment and recommendation of the Project Designer, and without terminating the Contract, make payment of the balance due for that portion of the Work fully completed and accepted. If the remaining balance to be held by CITY for Work not fully completed or corrected is less than the retainage stipulated in the Contract, and if bonds have been furnished as required in Paragraph 5 the written consent of the Surety to the payment of the balance due for the portion of the Work fully completed and accepted shall be submitted by CONTRACTOR to CITY REP with CONTRACTOR'S Application for such payment. Such payment shall be made under the terms and conditions governing final payment, except that it shall not constitute a waiver of claims.

### 15.10 Contractor's Continuing Obligation

CONTRACTOR'S obligation to perform and complete the Work in accordance with the Contract Documents shall be absolute. Neither recommendation of any progress or final payment by the Project Designer, nor the issuance of a letter of Substantial Completion, nor any payment or issuance of a certificate by CITY to CONTRACTOR under the Contract Documents, nor any use or occupancy of the Work or any part thereof by CITY, nor any act of acceptance by CITY nor any failure to do so, nor the issuance of a notice of acceptability by the Project Designer pursuant to Paragraph 15.9, nor any correction of defective Work by CITY shall constitute an acceptance of Work not in accordance with the Contract Documents or a release of CONTRACTOR'S obligation to perform the Work in accordance with the Contract Documents.

### 15.11 Waiver of Claims

The making and acceptance of final payment shall constitute a waiver of all claims by CONTRACTOR against CITY, CITY REP and the Project Designer, and their consultants, directors, officers, employees and agents other than those previously made in writing and still unsettled.

### 15.12 City's Right to Withhold Certain Amounts and Make Application Thereof

A. In addition to the amount of retainage as stipulated in the Contract, the CITY may withhold a sufficient amount or amounts from any payment otherwise due to the CONTRACTOR as in CITY'S judgment may be necessary to cover:

1) Payments which may be past due and payable for properly filed claims against the CONTRACTOR or any Subcontractors for labor or materials furnished in or about the performance of the Work on the Project under this Contract.

2) Estimated or actual costs for correcting defective Work not remedied.

3) Amounts claimed by the CITY as liquidated damages, special damages, or other offsets, such as testing costs chargeable to the CONTRACTOR, reimbursement to CITY for costs incurred by reason of defective work and or repeated review of CONTRACTOR'S submittals.

4) Estimated costs for an independent consultant to properly complete as-built drawings when not acceptably completed in accordance with all the requirements herein.

B. CITY may apply such withheld amount or amounts to the payment of such claims at CITY'S discretion. In so doing, CITY shall be deemed the agent of CONTRACTOR and any payments so made by CITY shall be considered as a payment made under the Contract by the CITY to the CONTRACTOR, and CITY shall not be liable to the CONTRACTOR for such payment made in good faith. Such payments may be made without prior judicial determination of the claim or claims. CITY will render to CONTRACTOR a proper account of such funds disbursed on behalf of CONTRACTOR.

## ARTICLE 16- SUSPENSION OF WORK AND TERMINATION

### 16.1 City May Suspend Work

CITY may, at any time and without cause, suspend the Work or any portion thereof for a period of not more than ninety (90) days by notice in writing to CONTRACTOR and the Project Designer which shall fix the date on which Work shall be resumed. CONTRACTOR shall resume the Work on the date so fixed. CONTRACTOR will be allowed an increase in the Contract Price or an extension of the Contract Time, or both for costs, directly attributable to any suspension but not lost profits if CONTRACTOR makes a claim therefore as provided in Articles 12 and 13.

### 16.2 City May Terminate

A. Upon the occurrence of any one or more of the following events:

1) If CONTRACTOR is adjudged a bankrupt or insolvent;

2) If CONTRACTOR makes a general assignment for the benefit of creditors;

3) If a trustee or receiver is appointed for CONTRACTOR or for any of CONTRACTOR'S property;

4) If CONTRACTOR files a petition to take advantage of any debtor's act, or to reorganize under the bankruptcy or similar laws;

5) If CONTRACTOR repeatedly fails to perform the Work in accordance with the Contact Documents, including but not limited to, failure to supply sufficient skilled workmen or suitable materials or equipment or failure to adhere to the progress schedule established under Paragraph 2.6 as adjusted from time to time pursuant to Paragraph 6.16.

6) If CONTRACTOR repeatedly fails to comply with written directives from CITY REP.

7) If CONTRACTOR repeatedly fails to make prompt payments to Subcontractors or for labor, materials or equipment;

8) If CONTRACTOR disregards laws, ordinances, rules, regulations or orders of any public body having jurisdiction;

9) If CONTRACTOR otherwise violates in any substantial way any provisions of the Contract Documents.

CITY may without prejudice to any other right or remedy, serve written notice upon the CONTRACTOR and CONTRACTOR'S surety of CITY'S intention to terminate the Contract. Said notice to contain the reasons for such intention to terminate the Contract, and provide that unless within ten days after the service of such notice all such violations have been corrected and remedied, the Contract shall cease and terminate, and CONTRACTOR shall be excluded from the site. In such case, CONTRACTOR shall not be entitled to receive any further payment until the Work is finished by others.

B. In the event of any such termination, CITY shall immediately serve written notice thereof upon the surety and CONTRACTOR, and the surety shall have the right to take over and perform the Contract, provided however, that if the surety, within fifteen (15) days after the serving upon it of a notice of termination, does not give the CITY written notice of their intention to take over and perform the Contract, or does not commence performance thereof within thirty (30) days from the date of serving said notice, CITY may take possession of the Work and of all CONTRACTOR'S tools, appliances, construction equipment and machinery at the site and use the same to the full extent they could be used by CONTRACTOR (without liability to CONTRACTOR for trespass or conversion), incorporate in the Work all materials and equipment stored at the site or for which CITY has paid CONTRACTOR but which are stored elsewhere, and finish the Work as CITY may deem expedient for the account and at the expense of the CONTRACTOR. CONTRACTOR'S surety shall be liable to the CITY for any excess costs or other damage occasioned the CITY thereby. If the unpaid Balance of the Contract Price exceeds the direct and indirect costs of completing the Work, including but not limited to, compensation for additional professional services and all costs generated to insure or bond the Work of substituted contractors or subcontractors utilized to complete the Work, such excess shall be paid to CONTRACTOR. If such costs exceed the unpaid balance, CONTRACTOR shall pay the difference to the CITY promptly upon demand; on failure of CONTRACTOR to pay, the surety shall pay on demand by CITY. Any portion of such difference not paid by CONTRACTOR or surety within thirty (30) days following the mailing of a demand for such costs by CITY shall earn interest at the rate of fifteen (15%) percent per annum or the maximum rate authorized by Arizona law, whichever is lower. Such costs incurred by CITY shall be verified by CITY REP and incorporated in a Change Order, but in finishing the Work, CITY shall not be required to obtain the lowest figure for the Work performed.

C. Where CONTRACTOR'S services have been so terminated by CITY, the termination shall not affect any rights of CITY against CONTRACTOR then existing or which may thereafter accrue. Any retention or payment of moneys due CONTRACTOR by CITY will not release CONTRACTOR from liability.

D. If funds are not appropriated to continue this Contract and for the payment of charges hereunder, CITY may terminate this Contract at the end of the fiscal period. CITY agrees to give written notice of termination to the CONTRACTOR at least thirty (30) days prior to the end of CITY'S current fiscal period and will pay to the CONTRACTOR all charges incurred through the end of such period.

E. Upon seven (7) days written notice to CONTRACTOR and the Project Designer, CITY may, without cause and without prejudice to any other right or remedy, elect to abandon the Work and terminate the Contract. In such case, CONTRACTOR shall be paid for all Work executed and any expense sustained plus reasonable termination expenses.

### 16.3 Contractor May Stop Work or Terminate

If, through no act or fault of CONTRACTOR, the Work is suspended for a period of more than ninety (90) days by CITY or under an order of court or other public authority, or CITY fails to pay within (14) fourteen days to CONTRACTOR, any sum finally determined to be due, then CONTRACTOR may, upon seven (7) days written notice to CITY, terminate the Contract and recover from CITY payment for all Work executed and any expense sustained plus reasonable termination expenses. In addition and in lieu of terminating the Contract, if CITY has failed to make any payment as aforesaid, CONTRACTOR may, upon seven (7) days written notice to CITY, stop the Work until payment of all amounts then due. The provision of this paragraph shall not relieve CONTRACTOR of their obligations under Paragraph 6.15 to carry on the Work in accordance with the progress schedule and without delay during disputes and disagreements with CITY.

## ARTICLE 17– ALTERNATE DISPUTE RESOLUTION

### 17.1 Notice Required

A. Notwithstanding anything to the contrary provided elsewhere in the Contract documents, the alternative dispute resolution (ADR) process provided herein shall be the exclusive means for resolution of claims or disputes arising under, relating to or touching upon this Contract, the interpretation thereof or the performance or breach by any party thereto, including, but not limited to, original claims or disputes asserted as cross claims, counterclaims, third party claims or claims for indemnity or subrogation, in any threatened or ongoing litigation or arbitration with third parties, if such disputes involve parties to contracts containing this ADR provision.

B. CONTRACTOR shall submit written notice of any claim or dispute to CITY REP within seven (7) days of the occurrence, event or disputed response from CITY for immediate resolution pursuant to these provisions. Each claim or dispute shall be submitted and resolved as they occur and not postponed until the Project is complete nor lumped together with other pending claims.

C. Failure to submit a notice of any claim, dispute, request or other issue within the times set forth in Articles 11, 12, 13 or 17 shall constitute CONTRACTOR'S forfeiture of its right to dispute the issue, raise the claim or make the request and shall also constitute CONTRACTOR'S agreement and acceptance of the CITY'S position.

### 17.2 Decision of Project Designer on Disagreements

A. CITY REP will provide to CONTRACTOR a written response to any claim, request or proposal for a Change Order on or before fifteen (15) days from receipt of CONTRACTOR'S written claim, request or proposal.

B. The Project Designer will be the initial interpreter of the requirements of the Contract Documents and judge of the acceptability of the Work thereunder.

C. Written notice of any request for which an interpretation by the Project Designer is sought, together with written supporting data, shall be delivered by CONTRACTOR to CITY REP for presentation to the Project Designer within seven (7) days of the occurrence or the event giving rise thereto, within seven (7) days of CONTRACTOR becoming aware of the need for clarification or further information, or if the claim or dispute was first submitted for a response from CITY REP and CONTRACTOR disputes or disagrees with the response of CITY REP, within three (3) days of CONTRACTOR'S receipt of such response.

D. CITY REP will immediately transmit any such CONTRACTOR requests, claims or disputes and other matters relating to the acceptability of the Work or the interpretation of the requirements of the Contract Documents pertaining to the execution and progress of the

Work to the Project Designer in writing with a request for written response within seven (7) days.

E. The Project Designer will render a decision within seven (7) days of receipt of such transmittal.

### 17.3 Neutral Evaluator, Arbitrators

CITY will select a Neutral Evaluator to serve as set forth in this ADR process. CITY and CONTRACTOR shall each select an arbitrator of their choice within fifteen (15) days of the date of execution of this Contract to serve as set forth in this ADR process. Each arbitrator selected shall be a member of the State Bar of the State of Arizona, and shall be experienced in the field of construction law. Neither the arbitrator nor the arbitrator's firm shall have presently, or in the past, represented any party to the arbitration.

### 17.4 Neutral Evaluation Process

In the event either party disagrees with the response of the Project Designer or for disputes not appropriate for submittal to the Project Designer, if CONTRACTOR disagrees with the response of the CITY REP, the following neutral evaluation process shall be used to obtain resolution.

A. Notification of Dispute: Within three (3) days of receipt of the disputed response, the disputing party shall notify the City Engineer of the unresolved dispute. The City Engineer shall promptly notify the Neutral Evaluator in writing of the existence of a dispute.

B. Nonbinding Information Hearing: The Neutral Evaluator shall schedule a nonbinding informal hearing of the matter to be held within seven (7) days from receipt of notification of the existence of a dispute. The Neutral Evaluator may conduct the hearing in such manner as deems appropriate and shall notify each party to attend the hearing and present evidence they believe will resolve the dispute. The Neutral Evaluator is not bound by the rules of evidence in admitting evidence in the hearing and may limit the length of the hearing, witnesses or evidence introduced to the extent that he deems same to be relevant and efficient. Each party to the dispute shall be notified by the Neutral Evaluator that they shall submit a written outline of the issues and evidence intended to be introduced at the hearing and proposed resolution of the dispute to the Neutral Evaluator before the hearing commences. Arbitrators shall not participate in such informal hearing or proceeding process.

C. Nonbinding Decision: The Neutral Evaluator shall render a nonbinding written decision as soon as possible, but not later than five (5) days after the hearing.

### 17.5 Binding Arbitration Procedure

If the neutral evaluation procedure is unsuccessful, the following binding arbitration procedure shall serve as the exclusive method to resolve all unresolved disputes. If any party chooses not to accept the decision of the Neutral Evaluator, such party shall notify the Neutral Evaluator in writing within three (3) business days of receipt of the Neutral Evaluator's decision of a request for arbitration. The party requesting arbitration shall post a cash bond with the Neutral Evaluator in the amount of $5,000, or a greater amount as determined by the Neutral Evaluator, that will defray the cost of the arbitration as set forth in paragraph M, Fees and Costs, and proceeds from said bond shall be allocated in accordance with said paragraph by the Arbitration Panel.

A. Arbitration Panel: The Arbitration Panel shall consist of the arbitrators previously selected by the parties involved in the dispute, (i.e., CITY'S arbitrator, CONTRACTOR'S arbitrator, or any other CONTRACTOR'S arbitrator who has a contract with the CITY which contains this ADR provision and is a party to the dispute), and the foregoing arbitrators shall select a neutral arbitrator as set forth herein. The Neutral Evaluator shall participate in the proceedings and in the deliberations, but shall not be entitled to vote.

B. Selection of Neutral Arbitrator: The selected arbitrators shall choose additional arbitrator(s) (one additional arbitrator or two additional arbitrators as needed to ensure that the arbitration panel will consist of an odd number of arbitrators), within five (5) days of receipt of notification of a dispute from the Neutral Evaluator. The Neutral Arbitrator(s) shall have the same qualifications as those of the arbitrators set forth in the Neutral Evaluator, Arbitrators paragraph. In the event that the selected arbitrators cannot agree on additional Neutral Arbitrators as set forth above, the Neutral Evaluator shall select the additional arbitrator(s).

C. Expedited Hearing: The parties have structured this procedure with the goal of providing for the prompt and efficient resolution of all disputes falling within the purview of this ADR process. To that end, any party can petition the Neutral Evaluator to set an expedited hearing if circumstances justify it. The Neutral Evaluator shall contact the selected Arbitration Panel and arrange for scheduling of the arbitration at the earliest possible date. In any event, the hearing of any dispute not expedited will commence as soon as practical, but in no event later than twenty (20) days after notification of request for arbitration having been submitted. This deadline can be extended only with the consent of all the parties to the dispute, or by decision of the Arbitration Panel upon a showing of emergency circumstances.

D. Procedure: The Neutral Evaluator shall act as Chairman of the Arbitration Panel and will conduct the hearing that will resolve disputes in a prompt, cost efficient manner giving due regard to the rights of all parties. Each party shall supply to the Arbitration Panel a written pre-hearing statement, which shall contain a brief statement of the nature of the claim or defense, a list of witnesses and exhibits, a brief description of the subject matter of the testimony of each witness who will be called to testify, and an estimate as to the length of time that will be required for the arbitration hearing. The Arbitration Panel may review and consider the Neutral Evaluator’s decision. The Chairman shall determine the nature and scope of discovery, if any, and the manner of presentation of relevant evidence consistent with the deadlines provided herein, and the parties' objective that disputes be resolved in a prompt and efficient manner. No discovery may be had of privileged materials or information. The Chairman, upon proper application, shall issue such orders as may be necessary and permissible under law to protect confidential, proprietary, or sensitive materials or information from public disclosure or other misuse. Any party may make application to the Maricopa County Superior Court to have a protective order entered as may be appropriate to conform to such orders of the Chairman.

E. Hearing Days: To effectuate the parties’ goals, the hearing once commenced, will proceed from business day to business day until concluded, absent a showing of emergency circumstances.

F. Award: The Arbitrator Panel shall within ten (10) days from the conclusion of any hearing issue its award. The award shall include an allocation of fees and costs pursuant to the Binding Arbitration Procedure paragraph herein. Any award providing for deferred payment shall include interest at the rate of ten (10%) percent per annum. The award is to be rendered in accordance with the Contract and the laws of the State of Arizona.

G. Scope of Award: The Arbitration Panel shall be without authority to award punitive damages, and any such punitive damage award shall be void. The Arbitration Panel shall also be without authority to issue an award against any individual party in excess of $500,000, exclusive of interest, arbitration fees, costs, and attorney's fees. If an award is made against any individual party in excess of $50,000, exclusive of interest, arbitration fees, costs. and attorneys' fees, it must be supported by written findings of fact, conclusions of law and statement as to how damages were calculated.

H. Jurisdiction: The Arbitration Panel shall not be bound for jurisdictional purposes by the amount asserted in any party's claim, but shall conduct a preliminary hearing into the

question of jurisdiction upon application of any party at the earliest convenient time, but not later than the commencement of the arbitration hearing.

I. Entry of Judgment: Any party can make application to the Maricopa County Superior Court for confirmation of any award and for entry of judgment on it.

J. Severance and Joinder: To reduce the possibility of inconsistent adjudications, the Neutral Evaluator or the Arbitration Panel, may at the request of any party, join and/or sever parties, and/or claims arising under other contracts containing this ADR provision, and the Neutral Evaluator, (Chairman) may, on his own authority, join or sever parties and/or claims subject to this ADR process as they deem necessary for a just resolution of the dispute, consistent with the parties' goal of the prompt and efficient resolution of disputes. Nothing herein shall create the right by any party to assert claims against another party not recognized under the substantive law applicable to the dispute. Neither the Neutral Evaluator nor the Arbitration Panel is authorized to join to the proceeding parties not in privity with the CITY.

K. Appeal: Any party may appeal errors of law by the Arbitration Panel if, but only if, the errors arise in an award in excess of $100,000; the exercise by the Chairman or Arbitration Panel of any powers contrary to or inconsistent with the Contract; or any of the grounds provided in A.R.S. 12-1512. Appeals shall be to the Maricopa County Superior Court within fifteen (15) days of entry of the award. The standard of review in such cases shall be that applicable to the consideration of a motion for judgment notwithstanding the verdict, and the Maricopa County Superior Court shall have the authority to confirm, vacate, modify or remand an award appealed under this section.

L. Uniform Arbitration Act. Except as otherwise provided herein, binding arbitration pursued under this provision shall be governed by the Uniform Arbitration Act as enacted in Arizona in A.R.S. l2-1501, et. seq.

M. Fees and Costs. Each party shall bear its own fees and costs in connection with any informal hearing before the Neutral Evaluator. All fees and costs associated with any arbitration before the Arbitration Panel, including without limitation, the Arbitration Panelists' fees, the prevailing party's attorneys' fees, expert witness fees and costs, will be paid by the nonprevailing party, except as provided for herein. The determination of prevailing and nonprevailing parties, and the appropriate allocation of fees and costs, will be included in the award by the Arbitration Panel. Fees for the Neutral Evaluator shall be a project cost.

N. Equitable Litigation: Notwithstanding any other provision of ADR to the contrary, any party can petition the Maricopa County Superior Court for interim equitable relief as necessary to preserve the status quo and prevent immediate and irreparable harm to a party or to the Project pending resolution of a dispute pursuant to ADR provided for herein. No court may order any permanent injunctive relief except as may be necessary to enforce an order or award entered by the Arbitration Panel. The fees and costs incurred in connection with any such equitable proceeding shall be determined and assessed in ADR.

O. Change Order: Any award in favor of the CONTRACTOR against the CITY or in favor of the CITY against the CONTRACTOR shall be reduced to a Change Order and executed by the parties in accordance with the award and the provisions of General and Supplementary Conditions to this Construction Contract.

P. Merger and Bar: Any claim asserted pursuant to this ADR process shall be deemed to include all claims, demands, and requests for compensation for costs and losses or other relief, including the extension of Contract Time which reasonably should or could have been brought against any party that was or could have been brought into this ADR process. The Arbitration Panel shall apply legal principles commonly known as merger and bar to deny any claim or claims against any party regarding which claim or claims recovery has been sought

or should have been sought in a previously adjudicated claim for an alleged cost, loss, breach. error. or omission.

Q. Disputes of amounts greater than $500,000: Disputes for which the Arbitration Panel has determined to warrant an award in an amount greater than Five Hundred Thousand Dollars ($500,000) to any one party, may be brought in the appropriate Court. A party must obtain such a determination from the Arbitration Panel prior to filing any legal action.

## ARTICLE 18 - VALUE ENGINEERING

### 18.1 General

A. The CONTRACTOR may submit to CITY REP proposals for modifying the Plans, Specifications, or other requirements of the Contract for the sole purpose of reducing the total cost of the project without impairing in any manner the essential functions or characteristics of the project, including, but not limited to, service life, economy of operations, ease of maintenance, desired appearance, or design and safety standards.

B. It shall not be inferred from this subsection that the CITY is required to consider any proposal submitted.

C. Cost reductions contained in the proposal resulting from changes to contingency items, such as traffic control, dust palliative, etc., will not be considered.

### 18.2 Proposal Requirements

Proposals submitted pursuant to this subsection shall be identified as Value Engineering Proposals. They shall be submitted in writing and, at a minimum, contain the following:

A. A description of both the existing Contract requirements for performing the work and the proposed changes.

B. All engineering drawings and computations necessary for a thorough and expeditious evaluations.

C. An itemization of the existing Contract requirements that must be changed if the proposal is adopted and a recommendation as to the manner in which the change should be made.

D. A detailed estimate of the cost of performing the work under the existing Contract and under the proposed changes, including the cost of developing and implementing the changes.

E. The contract items affected by the proposed changes and any variations in quantities resulting from the changes.

F. An objective estimate of any effects the proposal will have on collateral costs to the CITY, cost of related items, and costs of maintenance and operation.

G. A statement as to the effect that the proposal will have on the time for the completion of the project.

H. A statement as to the time by which a change order adopting the proposal must be executed or when the CITY must have given oral or written approval.

I. A statement as to any time extension of time related to costs which will be required by the CONTRACTOR as a condition for implementing the proposed changes.

### 18.3 Review and Response

Proposals will not be considered until all of the above requirements have been met. Once all of the required submittals have been received, CITY REP will respond within ten (10) working days in writing as to whether or not the proposal will be considered for detailed evaluation. If no such notice is issued within the time allotted, the proposal shall be deemed rejected.

A. CITY will not be liable for any delay in acting upon any proposal nor for any failure to accept any proposal pursuant to this subsection.

B. CITY will be the sole judge of the acceptability of a proposal and of the estimated net savings in construction costs from the adoption of all or any part of the proposal. CONTRACTOR will be notified in writing by the CITY REP as to whether the CONTRACTOR'S proposal has been accepted. The decision by the CITY is final.

C. When CITY deems such action to be appropriate, it reserves the right to require the CONTRACTOR to share in the cost to the CITY of investigating, evaluating, and processing the proposal as a condition for the consideration of such proposal. Such cost shall be shared whether the proposal is accepted or rejected. When such a condition is imposed, the CONTRACTOR shall indicate their acceptance thereof in writing and such acceptance shall authorize the CITY to deduct the CONTRACTOR'S share of the CITY'S costs from any monies due or that may become due to the CONTRACTOR under the Contract.

### 18.4 Acceptance

A. If CONTRACTOR'S proposal is accepted in whole or in part, the necessary Contract modifications and Contract Price adjustments will be effected by the execution of a Change Order which will specifically state that it is executed pursuant to the provisions of this subsection.

B. CONTRACTOR shall continue to perform the work in accordance with the requirements of the Contract until a Change Order incorporating the proposal has been executed or until the CONTRACTOR has been given oral or written approval by the CITY that the CONTRACTOR'S proposal has been accepted. If the Change Order has not been executed, or the CONTRACTOR has not been given oral or written approval on or before the mutually agreed upon date, or on or before such other date as the CONTRACTOR may have subsequently specified in writing, the proposal shall be deemed to be rejected.

C. The executed Change Order shall incorporate the changes in the Plans, Specifications, or other requirements of the Contract Documents which are necessary to permit the proposal, or such part of it which has been accepted, to be put into effect, and shall include any conditions upon which the CITY'S approval thereof is based if such approval is conditional. The executed Change Order Contract shall also extend the time for the completion of the Contract if, and only if, the extension was required by the CONTRACTOR as a condition for implementing the proposal and such an extension has been deemed to be warranted by the CITY as a result of the CITY'S evaluation of the proposal.

D. The executed Change Order shall also establish the estimated net savings in the cost of performing the Work attributable to the proposal effectuated by the Change Order. In determining the net savings, the right is reserved to the CITY to disregard the Contract bid prices if, in the CITY’S judgment, such prices do not represent a fair measure of the value of the Work to be performed or to be deleted. The net savings will be established by determining the CONTRACTOR'S cost of performing the Work, taking into account the CONTRACTOR'S cost of developing the proposal and implementing the change, and reducing this amount by any ascertainable collateral cost to the CITY. The executed Change Order shall provide the Contractor be paid forty (40%) percent of the estimated net savings amount.

E. The executed Change Order shall also provide for the adjustment in Contract Prices. Contract Prices shall be adjusted by subtracting the CITY'S share of the accrued net savings.

F. The amount specified to be paid to the CONTRACTOR in the executed Change Order which effectuates a value engineering proposal shall constitute full compensation to the CONTRACTOR for the value engineering proposal and the performance of the Work thereof pursuant to the said Change Order.

## ARTICLE 19 -- GENERAL PROVISIONS

### 19.1 Partial Invalidity

If any provision of the Contract is held by a court of competent jurisdiction to be invalid, void or unenforceable, the remaining provisions shall nevertheless continue in full force without being impaired or invalidated in any way.

### 19.2 Attorneys' Fees

Should either party to the Contract bring an action to enforce any provision of the Contract, the prevailing party shall be entitled to recover reasonable attorneys' fees and costs in connection therewith.

### 19.3 Waiver of Rights

Except as otherwise specifically provided in the Contract Documents, no action or failure to act by the CITY, the Project Designer or CONTRACTOR shall constitute a waiver of any right or duty afforded any of them under the Contract Documents, nor shall any such action or failure to act constitute an approval of or acquiescence in any breach thereunder.

### 19.4 Giving Notice

A. When any provisions of the Contract Documents requires CONTRACTOR or the Project Designer to give written notice to CITY, it shall be deemed to have been validly given if delivered in person to the person designated in the Contract Documents as CITY REP, or if delivered at or sent by registered or certified mail, postage prepaid, to the City Engineer addressed as follows:

City of Chandler
Public Works Department
Attn: City Engineer
P.O. Box 4008, Mail Stop 405
Chandler, AZ 85244-4008

B. When any provisions of the Contract Documents requires CITY, CITY REP, or the Project Designer to give written notice to CONTRACTOR, it shall be deemed to have been validly given if delivered in person to the person designated in the Contract Documents as CONTRACTOR'S Resident Superintendent, or if delivered at or sent by registered or certified mail, postage prepaid, to CONTRACTOR at the last address in the Contract Documents or such substitute address which CONTRACTOR designates in writing, or to the business address known to the giver of notice.

### 19.5 Computation of Time

When any period of time is referred to in the Contract Documents by days, it shall be computed to exclude the first and include the last day of such period. If the last day of any such period falls on a Saturday or Sunday or on a day made a legal holiday by the law of the applicable jurisdiction, such day shall be omitted from the computation. Unless otherwise specified any action required shall be accomplished within a reasonable time.

### 19.6 Conflict of Interest

Pursuant to A.R.S. Sec. 38-511, a municipality may, within three (3) years after its execution, cancel any contract, without penalty or further obligation, if any person significantly involved in initiating, negotiating, securing, drafting or creating the contract on behalf of the municipality is, at any time while the contract or any extension of the contract is in effect, an employee or agent of any party to the contract in any capacity or a consultant to any other party of the contract with respect to the subject matter of the contract.

### 19.7 Assignment

A. The performance of the Contract may not be assigned, except upon the written consent of the CITY. Consent will not be given to any proposed assignment which would relieve the original CONTRACTOR or their surety of their responsibilities under the Contract, nor will the CITY consent to any assignment of a part of the Work under the Contract.

B. Upon obtaining a prior written consent of the CITY, the CONTRACTOR may assign moneys due or to become due them under the Contract, to the extent permitted by law, but any assignment of moneys shall be subject to all proper setoffs in favor of the CITY and to all deductions provided for in the Contract, and particularly all money withheld, whether assigned or not, shall be subject to being used by the CITY for the completion of the Work in the event that the CONTRACTOR should be in default therein.

C. No assignment of the Contract will be approved unless it shall contain a provision that the funds to be paid to the assignee under the assignment are subject to a prior lien for services rendered or materials supplied for performance of the Work called for under the Contract in favor of all persons, firms, or corporations rendering such services or supplying such materials and that the CITY may withhold funds due until all Work required by the Contract Documents is completed to the CITY'S satisfaction.

### 19.8 Notice of Injury

Should CITY or CONTRACTOR suffer injury or damage to their person or property because of any error, omission or act of the other party or of any of the other party's employees or agents or others for whose acts the other party is legally liable, claim shall be made in writing to the other party within seven (7) days of the first observance of such injury or damage.

END OF GENERAL CONDITIONS
ARTICLES 1 THROUGH 19

**TECHNICAL SPECIFICATIONS**

# FOR

# CITY OF CHANDLER

# LARGE VALVE REPLACEMENT

**Project No. WW1504.401**

**CHANDLER, ARIZONA**

**JUNE 2015**

**Mayor**
Jay Tibshraeny

**Vice Mayor**
Jack Sellers

**Town Council**
Trinity Donovan
Nora Ellen
Kevin Hartke
Rick Heumann
Jeff Weninger

Dibble Project No. 101471.02

## TECHNICAL SPECIFICATIONS

### DIVISION 1 – GENERAL REQUIREMENTS


| | |
|---|---|
| SECTION 01110 | Summary of Work |
| SECTION 01143 | Coordination with Owner's Operations |
| SECTION 01291 | Schedule of Values |
| SECTION 01301 | Pre-Construction Conference |
| SECTION 01311 | Project Coordination |
| SECTION 01312 | Progress Meetings |
| SECTION 01321 | Progress Schedule |
| SECTION 01323 | Construction Photographs and Video |
| SECTION 01330 | Submittals |
| SECTION 01331 | Reference Forms |
| SECTION 01332 | Shop Drawing Procedures |
| SECTION 01412 | Stormwater Pollution Prevention Plan and Permit |
| SECTION 01420 | References |
| SECTION 01452 | Testing Laboratory Services Furnished by CONTRACTOR |
| SECTION 01550 | Access Roads and Parking Areas |
| SECTION 01561 | Security |
| SECTION 01651 | Transportation and Handling of Materials and Equipment |
| SECTION 01661 | Storage of Materials and Equipment |
| SECTION 01721 | Protection of the Work and Property |
| SECTION 01724 | Connections to Existing Facilities |
| SECTION 01740 | Cleaning |
| SECTION 01781 | Operations & Maintenance Data |
| SECTION 01782 | Record Documents |
| SECTION 01783 | Spare Parts and Maintenance Materials |
| SECTION 01784 | Warranty Inspection |
| SECTION 01810 | Commissioning |


### DIVISION 2 – SITE WORK


| | |
|---|---|
| SECTION 02315 | Structural Excavation and Backfill |
| SECTION 02318 | Crushed Stone, Gravel and Decomposed Granite |
| SECTION 02514 | Pressure and Leakage Testing |
| SECTION 02515 | Cleaning and Disinfection of Large Pipeline |


### DIVISION 3 – CONCRETE


| | |
|---|---|
| SECTION 03305 | Concrete |
| SECTION 03600 | Grout |


### DIVISION 4 – MASONRY

NOT USED

**DIVISION 5 – METALS**
NOT USED

**DIVISION 6 – WOOD AND PLASTICS**
NOT USED

**DIVISION 7 – THERMAL AND MOISTURE PROTECTION**
NOT USED

**DIVISION 8 – DOORS AND WINDOWS**
NOT USED

**DIVISION 9 – FINISHES**
SECTION 09905 Painting and Protective Coating

**DIVISION 10 – SPECIALTIES**
NOT USED

**DIVISION 11 – EQUIPMENT**
NOT USED

**DIVISION 12 – FURNISHINGS**
NOT USED

**DIVISION 13 – SPECIAL CONSTRUCTION**
NOT USED

**DIVISION 14 – CONVEYING SYSTEMS**
NOT USED

**DIVISION 15 – MECHANICAL**
SECTION 15050 Piping Systems
SECTION 15051 Buried Piping Installation
SECTION 15052 Exposed Piping Installation
SECTION 15061 Pipe Hangers and Supports
SECTION 15101 Ductile Iron Pipe
SECTION 15102 Steel Pipe – Lined and Coated
SECTION 15110 Gate Valves, Operators and Appurtenances
SECTION 15119 Specialty Valves and Appurtenances
SECTION 15120 Piping Specialties and Appurtenances
SECTION 15121 Wall Pipes, Floor Pipes and Pipe Sleeves

# SECTION 01110

# SUMMARY OF WORK

## PART 1 - GENERAL

### 1.1 LOCATION AND DESCRIPTION OF WORK

A. The Work is located in the City of Chandler near the intersection of Pecos Road and McQueen Road and Pecos Road and 124th Street (the access road to the City of Chandler Surface Water Treatment Plant).

B. The Contract Documents for the Work to be performed include the following, but are not limited to:
   1. The installation of two (2) isolation valves and appurtenances on the existing 48-inch water transmission main located mainly within Pecos Road, supplied by the City of Chandler Surface Water Treatment Plant.

### 1.2 CONTRACT

A. NOT USED

### 1.3 WORK BY OWNER

A. OWNER will perform the following work:
   1. Operation of all existing system gates, valves and equipment, unless specified otherwise.

### 1.4 OWNER-FURNISHED EQUIPMENT AND MATERIALS

A. The items of equipment and materials to be furnished by OWNER for installation by CONTRACTOR are:
   1. Two (2) 36-inch resilient wedge gate valves

### 1.5 SEQUENCE AND PROGRESS OF WORK

A. Contractor shall submit a Construction Schedule covering the entire Work in accordance with Section 01321, Progress Schedule.

B. Contractor shall incorporate the requirements of Section 01143, Coordination with OWNER'S Operations, into the Construction Schedule. CONTRACTOR'S construction schedule may use a different sequence from that shown or specified, if techniques and methods known will result in cost and time savings to the OWNER, still achieve the required objective and maintain the same or greater level of

treatment. The ENGINEER'S determination on the acceptability of any alternative sequence from that shown or specified shall be final.

## 1.6 CONTRACTOR'S USE OF PREMISES

A. Coordinate use of the premises, for CONTRACTOR storage and the operations of workmen, with OWNER, ENGINEER and utility service companies.

B. The full use of the premises for storage, the operations of workmen and for all other construction activities will not be available to CONTRACTOR. Must operate entirely within the space allowed to him.

C. Sole responsibility for obtaining and paying all costs in connection with any additional work area, storage sites, access to the site or temporary right-of-way which may be required for proper completion of the Work, belongs to CONTRACTOR.

D. It shall be understood that responsibility for protection and safe-keeping of equipment and materials on or near the site will be entirely that of CONTRACTOR and that no claim shall be made against the OWNER or his authorized representatives by reason of any act. It shall be further understood that should any occasion arise necessitating access to the sites occupied by these stored materials or equipment, the ENGINEER shall direct CONTRACTOR owning or responsible for the stored materials and equipment to immediately move the same. No materials or equipment may be placed upon the property of the OWNER, other than in the designated areas as shown on the Drawings, or as described in the specifications, unless the ENGINEER has agreed to the location contemplated by CONTRACTOR to be used for storage. All stored materials shall be labeled according to the appropriate contractor or subcontractor with the manufacturer's label as well. Appropriate material safety data sheets (e.g., MSDS) shall be provided.

E. Required to share use of the premises with other contractors whose services the OWNER has obtained or will obtain for construction of other facilities on the site.

## 1.7 EASEMENTS AND RIGHTS-OF-WAY

A. Easements and rights-of-way determined by the OWNER to be required to perform the Work will be provided by OWNER. Confine construction operations within the limits indicated on the Drawings. Use due care in placing construction tools, equipment, excavated materials, and pipeline materials and supplies in order to avoid damage to property and interference with traffic. Do not enter any private property outside the designated construction easement boundaries without written permission from the ENGINEER and the owner of the property. Any private property or rights-of-way owned by other than the OWNER, which CONTRACTOR wishes to utilize during the performance of the Work, shall be provided by CONTRACTOR.

B. On Private Property: Reference Paragraph A.

C. Within Highway and Railroad Rights-of-Way: Permits will be obtained by CONTRACTOR. All Work performed and all operations of CONTRACTOR, its employees, or subcontractors within the limits of railroad and highway rights-of-way shall conform to the requirements and be under the control of the railroad or highway authority owning, or having jurisdiction over and control of, the right-of-way.

1.8 NOTICES TO OWNERS AND AUTHORITIES OF PROPERTIES ADJACENT TO THE WORK

A. Notify owners of adjacent properties and utilities when prosecution of the Work may affect them.

B. When it is necessary to temporarily obstruct access to property, or when any utility service connection must be interrupted, give notices sufficiently in advance to enable the affected persons to provide for their needs. Conform notices to any applicable local ordinance and, whether delivered orally or in writing, include appropriate information concerning the interruption and instructions on how to limit inconvenience caused thereby.

PART 2 - PRODUCTS (NOT USED)

PART 3 - EXECUTION (NOT USED)

+ + END OF SECTION + +

# SECTION 01143

# COORDINATION WITH OWNER'S OPERATIONS

## PART 1 - GENERAL

### 1.1 DESCRIPTION

A. The intent of this Section is to provide CONTRACTOR a sequence to perform the Work in such a manner that facilities have continuous, uninterrupted services and are maintained operational throughout the construction period.

B. The sequences have been assembled to maintain water main operations during construction.

C. Except for the shutdown durations specified in this Section, CONTRACTOR'S means and methods shall be implemented such that the existing water transmission main or booster pump station, shall remain in continuous satisfactory operation during the entire construction period. Work shall be so scheduled and conducted by CONTRACTOR such that it shall not impede any water delivery, water supply, water treatment process, compromise water plant security, create potential hazards to operating equipment and plant personnel. In performing the Work shown and specified, CONTRACTOR shall plan and schedule the Work to meet both the constraints outlined in this Section and water main or water facility operating requirements.

D. Work not specifically covered in the following paragraphs may, in general, be done at anytime during normal work hours during the Contract period, subject to the operating requirements outlined in this Section. All references to days in this Section are consecutive calendar days.

E. CONTRACTOR has the option of providing additional temporary facilities that can eliminate a constraint provided it is done without additional cost to the OWNER, presents no safety hazards, and provided that all requirements of these Specifications are fulfilled.

F. CONTRACTOR shall be Responsible for coordinating all shutdowns with the OWNER and ENGINEER. Whenever possible, combine discrete shutdown procedures identified in this Section or by CONTRACTOR into a single shutdown when the duration of the shutdowns or the Work requirements allow such combining to occur on a unit process or work area. The intent of combining procedures is to minimize the impacts upon water plant operations

and transmission mains and processes by limiting the number of shutdowns required.

G. CONTRACTOR shall not shut-off or disconnect any operating system of the water main, unless approved by the ENGINEER, in writing. All water operations and shutdowns shall be executed by the OWNER, unless otherwise noted. Seal OWNER operated gates and valves to prevent unnecessary leakage. After CONTRACTOR'S Work has been completed, remove the seal or plug to the satisfaction of the ENGINEER.

H. CONTRACTOR shall be responsible for supplying all temporary pipelines, valves, pumps, meters, spare parts, electrical, controls, any other appurtenances, and labor required for the installation and operation of temporary bypass lines, pumping systems, or conveyance systems required to maintain operations of the water main or water facility during construction activities. Man all pumps continuously (24 hours per day) when in service. Submit to the ENGINEER, for information only, the design for all temporary lines, pumping, or conveyance systems at least 14 days prior to the commencement of the Work.

I. CONTRACTOR shall be responsible for provisions for dewatering, dechlorinating, filling, and disinfecting water mains and fittings as applicable.

J. CONTRACTOR shall provide provisions for all confined spaced entries for workers and City inspectors.

## 1.2 GENERAL CONSTRAINTS

A. Article 1.3, below specifies the sequence and shutdown durations, where applicable, for water main or the water facility which are to be taken out of service. The operational status of new or existing units other than the designated units shall not be interrupted by CONTRACTOR during the specified time periods. New water main or water facility may only be used after the specified testing is completed and the units are accepted for use by the ENGINEER, in writing.

B. The following constraints shall be applied to all water main or water facilities.

1. Safety Barriers and Traffic Control: Place safety barriers around unsafe areas, traffic barricades and traffic control plan are required to be submitted prior to all work.
2. Power, Light and Communication Systems: Electric power, lighting service and communication systems shall be maintained in uninterrupted operation in all areas, unless otherwise specified in Article 1.3, below.

3. Water Piping: Interim piping shall be provided by CONTRACTOR, as required.
4. Dead End Valves or Pipe: CONTRACTOR shall provide blind flanges on all valves or pipes which dead-end a line on a temporary or permanent basis. Blind flanges shall be braced and blocked, as required or as directed by the ENGINEER in the field.
5. CONTRACTOR shall schedule all start-ups for Monday through Thursday. No start-ups will be allowed on Friday, Saturday, and Sunday.

## 1.3 SHUTDOWNS

A. General:

1. A shutdown shall be defined as a portion of the normal operation of a water main or water facility that has to be suspended or taken out of service in order to perform the specified Work. For each shutdown, compile an inventory of labor and materials required to perform tasks, provide an estimate of the time required (including time for the OWNER to take down and start-up the water main or water facility), and a written description of steps required to complete all tasks. **The inventory, the estimate, and written procedures shall be submitted to the ENGINEER for review 21 calendar days prior to the proposed start date of the shutdown**. Request, in writing from the ENGINEER, approval for each shutdown a minimum of 14 calendar days prior to the proposed shutdown date. No shutdown shall be initiated until the inventory of materials and labor is verified by the ENGINEER on site at least 1 week(s) prior to the proposed start date.
2. The Work required herein and any other Work required by the ENGINEER which may interrupt the normal water main or water facility shall be accomplished at such times that will be convenient to the OWNER.
3. CONTRACTOR shall have on hand and located in close proximity to the Work area, all tools, equipment, spare parts and materials, both temporary and permanent, necessary to complete each Work category without interruption. Adequate numbers of personnel shall be scheduled for each shutdown so that the Work shall be accomplished within the specified time frame. **Prefabrication of all piping and other assemblies shall be completed, to the greatest degree possible, prior to any shutdowns**. The ENGINEER shall be satisfied that CONTRACTOR has complied with these requirements, to the fullest extent possible, before shutdowns will be authorized.
4. If CONTRACTOR'S procedures cause an unscheduled shutdown of the facilities, perform Work as necessary to immediately re-establish satisfactory operation. Notify the ENGINEER, in writing, immediately of any unscheduled shutdown. Permit OWNER'S personnel to work with CONTRACTOR'S personnel, as required, to maintain the water main or water facility in continuous satisfactory operation. Unscheduled shutdowns

or interruptions of continued safe and satisfactory operation of the facilities that result in fines levied by the U.S. Environmental Protection Agency, Arizona Department of Environmental Quality, Maricopa County Health Department Bureau of Air Pollution Control, or the Maricopa County Department of Environmental Services shall be the responsibility of CONTRACTOR if it is demonstrated that CONTRACTOR was negligent in the Work or did not exercise proper precautions in the conduct of the Work.

5. The scheduled shutdowns during the period of CONTRACTOR'S Work will be as shown in Table 01143-A. All Work requiring the water main or water facility to be out-of-service shall be performed during the scheduled shutdowns shown. It should be noted City operations staff shall continue to perform administrative, operation and maintenance functions during shutdowns.

B. Shutdowns of Electrical Systems: Not used.

**TABLE 01143-A**
**SCHEDULE OF SHUTDOWNS DURING CONSTRUCTION PERIOD**

| Area | Equipment | Constraints | Dates/ Duration |
|---|---|---|---|
| Pecos Road and Fire Station Entrance Road | Remove portion of existing 48-inch water transmission main and install new isolation valve | Shall be performed between 11/25/2015 to 12/24/2015, coordinate with City of Chandler | TBD |
| Pecos Road and McQueen Road | Remove portion of existing 48-inch water transmission main and install new isolation valve | Shall be performed between 11/25/2015 to 12/24/2015, coordinate with City of Chandler | TBD |
| | | | |

## 1.4 OVERTIME

A. All overtime Work by CONTRACTOR necessary to conform to the requirements of this Section shall be performed by CONTRACTOR, at no additional cost to the OWNER and shall be performed in accordance with the General Conditions. Make no claims for extra compensation as a result thereof.

## 1.5 MAINTENANCE OF PLANT OPERATIONS SCHEDULE

A. In order to maintain a continuous water main or water facility operation during construction, a Maintenance of Plant Operations (MOPOs) Schedule shall be prepared by the CONTRACTOR.

B. Within each MOPO item's procedural steps, time and scheduling constraints and milestone dates may be outlined and are intended to assist CONTRACTOR in developing a sequence of Work and timing in order to maintain continuous operation of the water main or water facility.

C. CONTRACTOR shall develop a detailed description of the complete sequence of construction for all the MOPO events contained herein.

D. The procedures contained herein were developed based upon available information. This list does not address all required tie-ins, but only those anticipated to be of significant impact to water main and existing water facility operations.

E. CONTRACTOR is required to make all tie-ins, connections, and replacements necessary to perform the Work.

F. CONTRACTOR is advised that Work in multiple areas of the water main construction area and at multiple water facilities may be performed simultaneously in order to complete the entire scope of the Work within the allotted Contract time.

## PART 2 - PRODUCTS (NOT USED)

## PART 3 - EXECUTION (NOT USED)

+ + END OF SECTION + +

# SECTION 01291

# SCHEDULE OF VALUES

## PART 1 - GENERAL

### 1.1 DESCRIPTION

A. The Preliminary Schedule of Values is an itemized list that establishes the value or cost of each major part of the Work and the division of Work between CONTRACTOR and subcontractors.

B. The Preliminary Schedule of Values shall include all items of Work in the Contract Documents.

C. The Schedule of Values is a detailed itemized list that establishes the value or cost of each detailed part of the Work. It and the Progress Schedule updates specified in Section 01321, Progress Schedule, shall be used as the basis for preparing progress payments. The Schedule of Values may be used as a basis for negotiations, concerning additional work or credits, which may arise during the construction. Quantities and unit prices shall be included in the schedule, when approved by or required by the ENGINEER.

D. The Preliminary Schedule of Values and Schedule of Values itemized list of Work, for each major part of the Work and division of Work shall be grouped so that no individual work item should exceed $50,000.

E. The Schedule of Values shall include an itemized list of Work for all Maintenance of Plant Operations (MOPO) Work as specified in Section 01143, Coordination with OWNER'S Operations. Itemized MOPO Work shall be included within applicable major Work area.

### 1.2 PREPARATION

A. The Preliminary Schedule of Values:
   1. Preliminary Schedule of Values shall show all Work under the index areas listed in Paragraph 1.1.D., above.
   2. Preliminary Schedule of Values shall show the division of Work between CONTRACTOR and subcontractors by two methods, one for each Section of the Specifications and also one for each structure.
   3. Preliminary Schedule of Values shall show breakdown of labor, materials equipment and other costs used in preparation of the Bid for CONTRACTOR and subcontractors.

4. Costs shall be in sufficient detail to indicate separate amounts for each Section of the Specifications and for each structure.
5. May include an item for bond, insurance, and temporary facilities.
6. Preliminary Schedule of Values shall be prepared on 8-1/2-inch by 11-inch white paper.
7. Use Table of Contents of the Specifications as basis for Preliminary Schedule of Values format and identify each item with number and title in the Table of Contents. Also, use each structure as basis for Schedule of Value format. List sub-items of major products or systems, as appropriate or when requested by ENGINEER.
8. When requested by ENGINEER, support values with data that will substantiate their correctness.
9. The sum of the individual values shown on the Preliminary Schedule of Values shall equal the total Contract Price.
10. Each item shall include a directly proportional amount of CONTRACTOR'S overhead and profit.

B. The Schedule of Values:
1. Schedule of Values shall show breakdown of quantities, labor, materials, equipment, and other costs used in preparation of the Bid for each item in the Schedule of Values.
2. Schedule of Values shall show all Work under the index areas listed in Paragraph 1.1.D., above.
3. Include separate pay items for Mobilization and Demobilization, as specified in the Contract Documents.
4. Schedule of Values shall be prepared on 8-1/2-inch by 11-inch white paper.
5. Use Table of Contents of the Specifications and the form included with Section 01330, Submittals, as basis for Schedule of Values format and identify each item with number and title in the Table of Contents. Also, use each structure as basis for schedule format. List sub-items of major products or systems, as appropriate or when requested by ENGINEER.
6. When requested by ENGINEER, support values with data that will substantiate their correctness.
7. The sum of the individual values shown on the Schedule of Values shall equal the total Contract Price.
8. Each item shall include a directly proportional amount of CONTRACTOR'S overhead and profit.
9. Schedule of Values shall show the purchase and delivery costs for materials and equipment that CONTRACTOR anticipates he shall request payment for prior to their installation.
10. Include a separate pay item for all Allowances and Extra Unit quantities.
11. The Schedule of Values shall be prepared to a level of detail equal to or greater than required by the Supplementary Conditions.

## 1.3 SUBMITTALS

A. Submit two copies of the Preliminary Schedule of Values to ENGINEER for review within seven (7) days after the Notice to Proceed.

B. Submit two copies of the Schedule of Values to ENGINEER for review within 14 days after the Notice to Proceed.

## PART 2 - PRODUCTS (NOT USED)

## PART 3 - EXECUTION (NOT USED)

+ + END OF SECTION + +

# SECTION 01301

# PRE-CONSTRUCTION CONFERENCE

## PART 1 - GENERAL

### 1.1 DESCRIPTION

A. Date, Time and Location: Conference will be held after notice of award of the Contract. ENGINEER will fix the date, time and location of the meeting, within 30 days of notice of award.

B. ENGINEER shall prepare agenda, preside at meeting, and prepare and distribute a transcript of proceedings to all parties.

C. Provide data required, contribute appropriate items for discussion, and be prepared to discuss all items on agenda.

D. Unless previously submitted to ENGINEER, bring to the conference a preliminary schedule of each of the following:
   1. Preliminary Progress Schedule.
   2. Shop Drawing, Sample submittals, and Submittal Schedule.
   3. Schedule of Values.
   4. Project Acceptance Letter
   5. Chain of Authority
   6. Emergency Contacts
   7. Labor and Equipment Rates

### 1.2 REQUIRED ATTENDANCE

A. Conference shall be attended by CONTRACTOR’S Project Manager, its superintendent and its major subcontractors and major equipment suppliers as CONTRACTOR deems appropriate.

B. OWNER'S representative.

C. ENGINEER.

D. Representatives of governmental agencies having any degree of control or responsibility, if available.

E. Utility company representatives.

## 1.3 PURPOSE

A. The purpose of the Pre-construction conference is to designate responsible personnel and establish working relationships. Matters requiring coordination will be discussed and procedures for handling such matters will be established. A complete agenda will be furnished to CONTRACTOR prior to the Pre-construction conference date. However, be prepared to discuss all of the following; but will not necessarily be limited to the following:

1. Designation of responsible personnel.
2. Subcontractors.
3. Coordination with other contractors and projects.
4. Progress schedule.
5. Processing of Shop Drawing Submittals.
6. Schedule of Shop Drawing submittals.
7. Processing of Field Orders, Requests for Information and Clarification and Change Orders.
8. Requirements for copies of Contract Documents.
9. Insurance in force.
10. Schedule of values.
11. Processing and Schedule of Payments.
12. Use of premises.
13. CONTRACTOR responsibility for safety and first aid procedures.
14. Site Security.
15. Housekeeping.
16. Field Offices.
17. Maintaining Record Drawings.
18. Letter of Notice to Proceed.
19. Permits.
20. Emergency Telephone Numbers.
21. Operation and Maintenance Manuals.
22. Temporary Utilities.
23. I&C Inspection & Testing Services Coordination
24. Electrical Arc Flash Coordination
25. Any other project related items.

## PART 2 - PRODUCTS (NOT USED)

## PART 3 - EXECUTION (NOT USED)

+ + END OF SECTION + +

# SECTION 01311

# PROJECT COORDINATION

## PART 1 - GENERAL

### 1.1 DESCRIPTION

A. As more fully set forth in of the General Conditions, sole responsibility for coordination of all of the Work, belongs to CONTRACTOR. Supervise, direct and cooperate fully with all subcontractors, manufacturers, fabricators, suppliers, distributors, installers, testing agencies and all others whose services, materials or equipment are required to ensure completion of the Work within the Contract Time.

B. As more fully set forth in of the General Conditions, Cooperate with and coordinate the Work with the work of any other contractor, including the following, utility service companies or OWNER'S employees performing work at the site:
   1. Valve Operation.

C. CONTRACTOR will not be responsible for damage done by contractors not under CONTRACTOR’S jurisdiction. In addition, CONTRACTOR will not be liable for any such loss or damage, unless it is through the negligence of CONTRACTOR.

D. CONTRACTOR shall coordinate the Work with the work of others to assure compliance with schedules.

E. CONTRACTOR shall attend and participate in all project coordination or progress meetings and report on the progress of all Work and compliance with schedules.

F. CONTRACTOR shall maintain sufficient competent personnel for the purpose of preparing layout, coordination and Record Drawings. These drawings shall supplement the Contract Documents, and the working and Shop Drawings as necessary to correlate the Work of various trades.

G. It is the duty of the CONTRACTOR to determine that all necessary permits have been obtained. The CONTRACTOR, at his own expense, obtain, maintain and close all the required permits which have not been furnished.

## PART 2 - PRODUCTS (NOT USED)

## PART 3 - EXECUTION (NOT USED)

+ + END OF SECTION + +

# SECTION 01312

# PROGRESS MEETINGS

## PART 1 - GENERAL

### 1.1 DESCRIPTION

A. Date and Time:
   1. Regular Meetings: Every week on a day and time agreeable to OWNER, ENGINEER and CONTRACTOR.
   2. Other Meetings: As needed and/or required in other specific specification sections.

B. Place: CONTRACTOR'S field office at Project site, or other mutually agreed upon location.

C. The ENGINEER shall conduct weekly progress meetings, record and distribute minutes of the meeting to all attendees and others as requested. At a minimum, the agenda will include: Requests for Information (RFI) and submittal status, past week's progress and a 3-week look-ahead schedule to include upcoming inspections, current issues, long lead items, critical issues and the next scheduled meeting date.

D. The CONTRACTOR shall prepare three week look ahead schedules including upcoming testing and key inspections.

E. Provide data required and be prepared to discuss all items on agenda.

### 1.2 MINIMUM ATTENDANCE

A. CONTRACTOR:
   1. When needed for the discussion of a particular agenda item, require representatives of subcontractors or suppliers to attend a meeting.

B. ENGINEER.

C. OWNER'S representative, if required.

D. Others, as appropriate.

E. Representatives present for each party shall be authorized to act on their behalf.

## 1.3 AGENDA

A. Agenda will include, but will not necessarily be limited to, the following:
   1. Transcript of previous meeting.
   2. Progress since last meeting.
      a. CONTRACTOR'S.
      b. Subcontractors'.
   3. Completion status.
   4. Planned progress for next period including a 3-week look-ahead schedule to include upcoming inspections.
   5. Document and track to correction and closure any problems, conflicts, issues, and observations that are voiced by anyone of the project team.
   6. Status of Shop Drawings, submittals, long lead items, RFI and RFAs.
   7. Change Orders.
   8. Pay Requests.
   9. Quality Standards and Control.
   10. Schedules, updated Project Schedules, including off-site fabrication and delivery schedules; corrective measures, if required.
   11. Coordination between parties.
   12. Permits.
   13. Safety concerns.
   14. Construction Photographs.
   15. Record Drawings.
   16. Warranty Requests.
   17. Punch List Status.
   18. Other business.
   19. Next meeting date.

## PART 2 - PRODUCTS (NOT USED)

## PART 3 - EXECUTION (NOT USED)

+ + END OF SECTION + +

# SECTION 01321

# PROGRESS SCHEDULE (CPM)

## PART 1 - GENERAL

### 1.1 DESCRIPTION

A. This Section describes the Progress Schedule requirements to ensure that interim milestone dates will be met and completion of the Work will be accomplished within the time established. ENGINEER'S opinions concerning the various scheduling documents and reports are not controlling CONTRACTOR'S independent judgement concerning means, methods, and sequences of construction CONTRACTOR employs. Sole responsibility for meeting the Contract time(s) given in these Contract Documents, belongs to CONTRACTOR.

B. No later than seven (7) calendar days after the Notice of Award, submit a Preliminary Progress Schedule. The Preliminary Progress Schedule shall be referenced to time. The balance of Work leading to Substantial Completion of the Project shall be included, in a summary format.

C. No later than seven (7) calendar days after the Notice to Proceed, submit to the ENGINEER an updated Preliminary Progress Schedule prepared in accordance with Article 1.1 through 1.6, herein.

D. No later than 14 calendar days after the Notice to Proceed, submit to the ENGINEER a Progress Schedule prepared in accordance with Articles 1.1 through 1.7, herein. Upon review and acceptance, the CONTRACTOR'S submitted progress schedule, described in this paragraph, will be deemed to be the "Baseline Schedule". (The use of the term "Baseline Schedule" refers to the early dates; the late dates are for the purpose of calculating float, and do not represent the schedule). This Baseline Schedule shall be used by the CONTRACTOR for planning, scheduling and executing the Work and for monitoring and reporting progress to the ENGINEER. No changes to the Baseline Schedule may be made by the CONTRACTOR without the approval of the ENGINEER.

E. To ensure completion of the Work within the contract times established, all of CONTRACTOR'S activities shall be scheduled and monitored by use of a Critical Path Method (CPM) Progress Schedule. Provide a CPM Schedule for Work done under this Contract, in accordance with this Section, and the sequence and progress of Work requirements included under Section 01110, Summary of Work and Section 01143, Coordination with OWNER'S Operations, the Supplementary Conditions and the Construction Sequence Diagram.

F. The Progress Schedule shall be prepared by CONTRACTOR using the Critical Path Method (CPM) utilizing the latest version of Primavera Project Planner software with Primavision (Primavera Project Planner and Primavision are U.S. registered trademarks of Primavera Systems, Inc., Bala Cynwyd, PA), or approved equal as determined by the OWNER and ENGINEER, conforming to the requirements hereinafter described.

## 1.2 LOGIC DIAGRAM

A. CONTRACTOR'S Scheduling Consultant or qualified CONTRACTOR'S employee shall prepare and submit a complete reproducible set of pure logic diagrams as generated by Primavera on 24-inch by 36-inch, or 11-inch by 17-inch drawings. The logic diagrams shall be grouped by Area and show the order and interdependence of activities and the sequence and quantities in which the Work is to be accomplished. Interrelationships to or from activities outside the area shown will be depicted by an activity symbol with activity number and description shown from the Primavera program. The basic concept of Precedence Diagramming Method (PDM) network scheduling shall be followed to show how the start of a given activity is dependent on the completion of preceding activities and how its completion may affect the start of following activities. The level of schedule detail shall define the day-to-day activities of the construction Work. No construction activity duration shall be longer than ten (10) working days without prior approval.

B. The critical path shall be distinguished from other paths on the network. The logic diagrams shall be banded by major work systems, including one system for procurement and by specific area within each system. Logic diagrams shall include the following:
   1. Activity number.
   2. Activity description.
   3. Activity duration (work days).
   4. Critical path denoted.
   5. Slack or float of each activity.
   6. System designation.
   7. Area code.
   8. Responsibility code (e.g., CONTRACTOR, subcontractors, trades, operations, suppliers, ENGINEER, or other party responsible for accomplishment of an activity).
   9. Shift number (if more than one shift per day is to be employed).

C. In addition to construction activities, network activities shall include the submittal and approval of samples of materials, shop and working drawings, and fabrication of special materials. It shall include all documents and proofs of compliance required by the Contract Documents for Final Inspection and Acceptance of the Work.

D. The Schedule Document shall include a System and Acceptance schedule within the project CPM schedule. This schedule will identify all equipment and systems that require testing, training and acceptance by the City. The durations and sequences of the systems testing and acceptance must be as specified in the various sections of the contract specification. Each system will contain, but will not be limited to, all of the following activities and constraints:
   1. Interface between the construction activities and their respective system.
   2. CONTRACTOR'S pre-testing work.
   3. Submittal and Approval of the CONTRACTOR'S Pre-testing Data and checklist, as appropriate.
   4. Sufficient notification time to the City prior to system testing.
   5. Submittal and Approval of the Preliminary and Final As-Built Drawings.
   6. Submittal and Approval of the Preliminary and Final O&M Manuals.
   7. Submittal and Approval of Testing Procedures.
   8. All other systems that are required to be tested and accepted prior to the specific system being tested.
   9. System Testing by the City.
   10. Other outside agencies, utilities, etc., that are required to test, witness and accept the system.
   11. Submittal and Approval of the Training Syllabus, Training Manual, and Training Video.
   12. Performance of Training.

E. All activities of the ENGINEER/OWNER that affect progress and special dates required by the Contract shall be shown.

## 1.3 MATHEMATICAL TABULATIONS

A. The mathematical tabulation of the network diagram shall include tabulation of each activity shown on the detailed network diagram.

B. The information listed below shall be furnished as a minimum for each activity. All submittal and updates shall consist of Three (3) copies of the reports described below and two sets of compact discs (CD's) containing Primavera schedule backups and PDF version. The minimum required information includes:
   1. Activity number.
   2. Activity description.
   3. Activity duration (work days).
   4. Earliest start date (calendar date).
   5. Earliest finish date (calendar date).
   6. Latest start date (calendar date).
   7. Latest finish date (calendar date).
   8. Slack or float of each activity.

9. Quantities involved for each construction activity with manhour requirements and dollar values.
10. Critical path activities denoted.
11. Work days calendar which extends for not less than the length of the contract, plus six months.

C. The mathematical tabulation shall be in the form of computer-generated reports. The reports shall be bound in booklet form, indexed, and separated by tabbed dividers. Computer-generated reports, of the following sorts, provided by CONTRACTOR:
   1. Milestone Report.
   2. Critical Path Activities Report by Early Start.
   3. Area Schedule Report for each System by Area/Early Start/Total Float.
   4. Responsibility Schedule Report for each System by Responsibility/Early Start/Total Float.
   5. 60-Day Look-Ahead Report by Area for Each System, then by activity number (with update line).
   6. Man-hour Resource Reports:
      a. Man-hour Summary by Responsibility.
      b. Monthly Projected Man-hour Flow Report (Tabular) with Manpower Resource Graphic on 24-inch by 36-inch, or 11-inch by 17-inch Sheet.
      c. Man-hour Summary by Area.
      d. Detailed Man-hour by Area/by Activity Report.

## 1.4 PROGRESS SCHEDULE SUBMITTAL

A. No later than seven (7) calendar days after the Notice of Award, submit to the ENGINEER a Preliminary Progress Schedule. The Schedule will be reviewed by the ENGINEER within seven (7) calendar days of receipt or request for adjustment. A meeting, or meetings, may be required with CONTRACTOR'S Scheduling Consultant during this period in order to expedite acceptance or adjustment. Any adjustments required after this period shall be made and resubmitted by CONTRACTOR within seven (7) calendar days.

B. No later than 14 calendar days after the Notice to Proceed, seven (7) calendar days after the complete Progress Schedule has been accepted by the ENGINEER, CONTRACTOR submit to the ENGINEER a Progress Schedule prepared in accordance with Articles 1.1 through 1.5, above. During this period the ENGINEER, CONTRACTOR and CONTRACTOR'S Scheduling Consultant shall meet biweekly to review the progress of the development of the Progress Schedule. Lack of progress in the development of the Progress Schedule shall be cause for suspension of any Progress Payment.

C. If, in the preparation of the Progress Schedule, CONTRACTOR reflects a completion date or milestone date different than that specified in the Contract, this in no way voids the dates set therein. The dates as specified in the Contract govern. Where the Progress Schedule reflects a completion date or milestone date earlier than specified, the ENGINEER may accept such schedule with CONTRACTOR specifically understanding that no claim for additional Contract Time or compensation shall be brought against the OWNER as the result of failure to complete the Work by the earlier date shown on the Progress Schedule.

## 1.5 FAILURE TO SUBMIT

A. Should CONTRACTOR fail to submit the Progress Schedule in the form indicated within the required time frames shall be cause for suspension of any Progress Payment.

## 1.6 UPDATING THE PROGRESS SCHEDULE

A. Updates:
   1. Monthly updates to the mathematical tabulation are the CONTRACTOR'S responsibility. The updated mathematical tabulation shall include the following data for each activity:
      a. Actual start date (for started activities).
      b. Actual finish date (for completed activities).
      c. Percent complete.
      d. Current projected early/late start/finish dates (for activities not started).
      e. Current early/late finish dates (for uncompleted activities).
      f. Current Total float.
      g. Critical path activities noted.
   2. CONTRACTOR'S Schedule Update shall include a narrative report which shall include a description of the current progress/status of each area of the project, a description of the progress for the period, a description of the critical path, a discussion of current or potential delays, Change Orders (pending or approved), or other problems.
   3. Provide the ENGINEER with five (5) updated hard copies of schedule data and two (2) software backup and PDF copies on CD's. Network diagrams shall be submitted with the tabulation if there are any proposed revisions to network logic, interim milestones, contract completion, or as directed by the ENGINEER. The updated tabulations shall reflect the current status of activities, as outlined on the baseline network diagram. The updated tabulation reports shall reflect all changes in dates, remaining durations, and float time. If any delays have occurred, these shall be noted for time consideration.

B. Network Revisions:
   1. Conditions may develop that require revisions to logic or durations of the

original network. If during the progress of the Work events develop that necessitate changes in the original Progress Schedule, propose such changes so as to depict the current mode of operation and provide the ENGINEER with a revised network diagram. Any revision to the original logic or original durations must be accepted by the ENGINEER, in writing. After acceptance, logic/duration revisions will be incorporated into the Progress Schedule and will be addressed in the monthly narrative report by means of both a description of the revisions and a listing of those network elements affected by such change. All changes resulting from Change Order(s), additions or deletions, will be fully incorporated into the Progress Schedule on the first update after the Change Order approval, including all adjustments to the man-hours.

2. Revisions and additions to the accepted network diagrams and mathematical tabulations shall be submitted in three (3) copies of the reports, two (2) software back-up copies on CD of the schedule and a reproducible set of the 24-inch by 36-inch pure logic diagrams.
3. The list of revisions and additions will include the following, when applicable:
   a. Addition and deletion of activities.
   b. Addition and deletion of relationships.
   c. Changes to activity descriptions and durations.
   d. Changes to relationship types and lag codes.
   e. Changes to contract milestone dates and approved constraint dates.
   f. Changes to dollar values resulting from approved Change Orders.
   g. All other revisions to the network logic.

## 1.7 TIME IMPACT ANALYSIS FOR CHANGE ORDERS, DELAYS, AND TIME EXTENSIONS

A. Change Orders, Delays, and Time Extensions:
   1. When a Change Order(s) is (are) proposed by the ENGINEER or CONTRACTOR, or delays are experienced, submit a Time Impact Analysis (TIA) illustrating the influence of each Change Order or delay on any specified intermediate milestone date(s) or contract completion date. Each TIA shall include a sketch (fragnet) demonstrating how CONTRACTOR proposes to incorporate the change(s) or delay(s) into the current Progress Schedule. The fragnet will include all logic changes and additions required as a result of said Change Order(s) or delay(s).
   2. This fragnet will show all CPM Logic revisions for the Work in question and its relationship to other activities in the network plan. Additionally, the analysis shall demonstrate the time impact, based on the date the change was given to CONTRACTOR, the status of construction at that point in time, and the activity duration of all affected activities. The activity duration used in this analysis shall be those included in the latest update of the Progress Schedule, closest to the time of delay as adjusted by mutual agreement in writing.

B. Submission:
   1. Each Time Impact Analysis shall be submitted within seven (7) calendar days after a delay occurs or a notice of change or Change Order is given to CONTRACTOR. In cases where CONTRACTOR does not submit a Time Impact Analysis for a specific change or delay within the specified period of time, it shall be mutually agreed that no time extension is required.

C. Evaluation:
   1. Final evaluation of each Time Impact Analysis by the ENGINEER shall be made within seven (7) calendar days after receipt, unless subsequent meetings and negotiations are necessary. Adjustments in the Contract time for performance shall be made only by written Change Order. Upon acceptance by the ENGINEER, fragnets illustrating the influence of changes and delays shall be incorporated into the current schedule by CONTRACTOR during the first update after agreement is reached.
   2. The time difference between the Early Finish date and the Late Finish date is defined as "float." The "float" belongs to the Project and may be used by CONTRACTOR or the OWNER to benefit the Project. Changes or delays that influence activities in the network with "float" and do not extend the Critical Path (the sequence of activities with zero days float) shall not be justification for an extension of Contract time for performance.

## 1.8 RECOVERY SCHEDULE

A. In the event that the Progress Schedule update mathematical analysis indicates that the Project, or progress towards any interim milestone requirement, falls seven (7) or more work days behind schedule and there is no excusable delay or change to support a time extension, prepare and submit a Recovery Schedule for acceptance by the ENGINEER. Also, revise logic or durations to cause the mathematical analysis to show the Project on schedule. The Recovery Schedule shall be submitted within five (5) calendar days after the Progress Schedule Update is submitted.

B. Provide additional manpower, equipment, or materials or work additional shifts, or expedite procurement to complete activities within the accepted intermediate or Contract completion dates, at no additional cost the OWNER. Upon acceptance of the Recovery Schedule by the ENGINEER, incorporate the Recovery Schedule into the current Progress Schedule.

C. Lack of Action:
   1. CONTRACTOR'S refusal, failure, or neglect to take appropriate recovery action or to submit a written recovery statement shall constitute reasonable evidence that CONTRACTOR is not prosecuting the Work, or separable part, with the diligence that will ensure its completion within the applicable Contract

time. Such lack of action shall constitute sufficient basis for the ENGINEER to recommend the withholding of some or all of any payment due, or shall be considered grounds for termination by the OWNER.

PART 2 - PRODUCTS (NOT USED)

PART 3 - EXECUTION (NOT USED)

+ + END OF SECTION + +

# SECTION 01323

# CONSTRUCTION PHOTOGRAPHS AND VIDEO

## PART 1 - GENERAL

### 1.1 DESCRIPTION

A. Retain a professional photographer or an acceptable person, as determined by the ENGINEER, to perform the services specified below.

B. Obtain ENGINEER'S approval of the photographer selected prior to taking first photographs. Submit qualifications and experience record of photographer to ENGINEER.

### 1.2 PRE-CONSTRUCTION PHOTOGRAPHS AND VIDEO

A. General
   1. It is the CONTRACTORS responsibility to provide sufficient pre-construction photographs and video, so as to resolve any disputes which may arise regarding the considerations prior to and subsequent to construction, belongs to CONTRACTOR.
   2. If a dispute arises where no Pre-construction photographs were provided, the disputed area shall be restored to the extent directed by the ENGINEER and to the complete satisfaction of the ENGINEER.
   3. Prior to the start of any construction activities the CONTRACTOR shall furnish (2) sets of color pre-construction photographs and video for approval; one for the ENGINEER and one for City.
   4. A high quality video of the site in digital format shall be made and submitted by the CONTRACTOR.

### 1.3 PHOTOGRAPHS

A. The CONTRACTOR shall take color digital photographs daily of all underground work in progress; work being done that will be exposed above ground shall be photographed on a bi-weekly basis. Photographs shall be taken in such a way to include an area or directional landmark. A minimum of five overall general project photographs depicting the overall project activities shall be taken monthly. A photograph log shall be maintained throughout the project with the following information for each photo: photograph number, a brief description, date, job title, location or station of pipeline (if applicable), and direction of the view in the photograph. The CONTRACTOR shall submit a plan that illustrates how the photograph log will be organized for approval by the OWNER.

B. ENGINEER will approve the views to be taken and select the time at which they will be taken. All photographs need to be viewable (digital). Views will vary depending on the Progress Schedule.

C. A minimum of one (1) color digital photographs will be taken each time the photographer is at the site.

D. Take a minimum of four (4) color digital photographs of the completed or substantially completed Work at Project Completion. These photographs shall be submitted with the Final Application for Payment. These photographs are not part of the photographs required under Paragraph 1.3.A through D, above.

PART 2 - PRODUCTS (NOT USED)

PART 3 - EXECUTION (NOT USED)

+ + END OF SECTION + +

# SECTION 01330

# SUBMITTALS

## PART 1 - GENERAL

### 1.1 DESCRIPTION

A. Submittal of documents described in the General Conditions, Supplementary Conditions and hereinafter are required prior to, during and at the end of the construction period. The submittals shall conform to the requirements described in this Section and all referenced Sections or Articles.

### 1.2 GENERAL SUBMITTAL REQUIREMENTS

A. A submittal shall be made for each complete system. Piecemeal submittals will not be accepted.
B. Submittals requiring ENGINEER review only will be processed within 14 calendar days after receipt from CONTRACTOR. Submittals requiring ENGINEER and OWNER review will be processed within 14 calendar days after receipt from CONTRACTOR.
C. CONTRACTOR shall maintain a file of all approved submittal documents at the work site.
D. CONTRACTOR shall show his executed internal review and approval marking. Submittals which are received from sources other than through CONTRACTOR'S Office or which have not undergone CONTRACTOR review will be returned "Rejected".

### 1.3 PROCEDURE

A. Submittals within seven days after the Notice of Award: Submit the following items within seven days after the Notice to Proceed. Location of information concerning each submittal is referenced and a copy of each required form is included in Section 01331, Reference Forms.
   1. Preliminary Schedule of Values: Prepare and submit in accordance with Section 01291, Schedule of Values.
   2. Preliminary Schedule of Shop Drawings and Sample Submittal in accordance with the General Conditions and Section 01332, Shop Drawing Procedures.
   3. Preliminary Progress Schedule: Prepare and submit in accordance with Section 01321, Progress Schedule.

B. Submittal within seven (7) days after the Notice to Proceed: Submit the following items within seven (7) days after the Notice to Proceed. Location of information concerning each submittal is referenced and a copy of each required form is included in Section 01331, Reference Forms.

1. Schedule of Values: Prepare and submit in accordance with Section 01291, Schedule of Values.
2. Submittal Schedule: Prepare and submit schedule of all Shop Drawings in accordance with Section 01332, Shop Drawing Procedures.
3. Monthly payment schedule.
4. Maintenance of Plant Operations Schedule, in accordance with Section 01143, Coordination with OWNER'S Operations.
5. Preliminary Progress Schedule: Prepare and submit a Progress Schedule within seven (7) days, in accordance with Section 01321, Progress Schedule.

C. Submit the following items within fourteen (14) days after the Notice to Proceed. Location of information concerning each submittal is referenced and a copy of each required form is included in Section 01331, Reference Forms.
   1. Progress Schedule: Prepare and submit a Progress Schedule within seven (7) days, in accordance with Section 01321, Progress Schedule.

D. Submit the following items at the Pre-construction Conference: Refer to Section 01332, Shop Drawing Procedures.

E. Submittals Prior to Beginning the Work: Refer to the General Conditions and Supplementary Conditions of the Contract Documents.
   1. Pre-construction photographs and video in accordance with section 01323.
   2. Copy of applicable permits.

F. Submittals During Construction: During progress of the construction, provide the following submittals in a timely manner to prevent any delay in the Work schedule:
   1. Updates to Progress Schedule: Provide an assessment of Work progress in relation to the Progress Schedule in accordance with Section 01321, Progress Schedule.
   2. Shop Drawings, Product Data and Samples: Submit Shop Drawings, product data and samples in accordance with Section 01332, Shop Drawing Procedures, and as required in various Sections of the Contract Documents.
   3. Progress Payments: Submit applications for partial payments as specified in the General Conditions.
   4. Request for Information: Submit a Request for Information (RFI), included in Section 01331, Reference Forms, when any of the following are required: an interpretation of the Specifications; additional details; information not shown on the Drawings or in the Specifications; or clarification of discrepancies is needed. Retain one copy and submit one (1) hard copy and one (1) electronic PDF format copy to the ENGINEER and OWNER for response.

   5. Allowance Use Request/Change Orders Request: Allowance Use/ Change Order Request Forms shown in Section 01331, Reference Forms. A proposal for a Change Order may be submitted by CONTRACTOR in accordance with the General Conditions. The Change Order Proposal included in Section 01331, Reference Forms, must be in writing and must include sufficient information to

assess the need for a change in the Work, the Contract time or the Contract amount. Whenever the ENGINEER determines the need for a Change Order, a Request for Change Order Proposal Form included in Section 01331, Reference Forms, will be issued to CONTRACTOR. Upon receipt of a Request for Change Order Proposal Form or when CONTRACTOR determines the need for a Change Order, prepare and submit three copies of a Change Order Proposal. The Change Order Proposal must be approved by CONTRACTOR, ENGINEER, and OWNER. If work requires a contract Change Order, CONTRACTOR is not authorized to begin work on a Change Order until it is fully executed. Any Work done by CONTRACTOR prior to execution of a Change Order is entirely at his own risk.

6. Submittal Schedule: Shown in Section 01331, Reference Forms. Submit an updated Shop Drawing, Product Data and Sample Submittal Schedule with each Progress Payment Request. Three updated Submittal Schedules shall be submitted with each month's Progress Payment Request.
7. Construction Photographs: Submit Construction Photographs and Aerial Photographs with each month's Progress Payment Request as specified in Section 01323, Construction Photographs.
8. Operation and Maintenance Manuals and Lesson Plans: Submit Equipment Operation and Maintenance Manuals for approval, by the ENGINEER, within 30 days after approval of Equipment Shop Drawing. Submit Equipment Training Lesson Plans for approval, by the ENGINEER, 60 days prior to commencement of training. Submit Operation and Maintenance Data and Lesson Plans in accordance with Section 01781, Operation and Maintenance Data and Section 01821, Instruction of Operations and Maintenance Personnel.
9. Submit test procedures for Start up, Burn-in, Field Operations Checks and Commissioning a minimum of 30 days prior to commencement of the first scheduled test date. The CONTRACTOR should allow up to 14 days for ENGINEER'S review.

G. Submittal at Substantial Completion: Submit all Operations and Maintenance Data for each item of Work commissioned into operation. Submit request for substantial completion inspection and certification.

H. Submittal At Project Closeout: Obtain written Notice of Completion, submit the following items in the proper form as a condition of Final Acceptance of the Work:
   1. Project Record Documents: Submit in accordance with Section 01782, Record Documents.
   2. Guarantees, Warranties and Bonds: Submit as required in the General Conditions and listed in various Sections of the Specifications, and Section 01781, Operation and Maintenance Data.
   3. Operations and Maintenance Data: Submit all remaining product data, field test data and manuals as specified in various Sections of the Specifications, and Section 01781, Operation and Maintenance Data.
   4. Survey notes.

5. Construction photographs of all completed Work, in accordance with Section 01323, Construction Photographs.
6. Affidavit of settlement of Claims.
7. Contractor signed Certificate of Completion
8. Spare parts.

PART 2 - PRODUCTS (NOT USED)

PART 3 - EXECUTION (NOT USED)

+ + END OF SECTION + +

# SECTION 01331

# REFERENCE FORMS

## PART 1 - GENERAL

### 1.1 DESCRIPTION

A. This Section contains the required forms for CONTRACTOR use in documenting testing Work and other Work required under this Contract. This Section supplements but does not supersede specific testing requirements found elsewhere in the Contract Documents.

B. The forms listed below are included in this Section are referenced from other Sections in the Contract Documents. Forms will include, but will not necessarily be limited to the list below. The forms provided indicate minimum requirements. If desired to use a supplemental form the document must be submitted for review and approval by the ENGINEER.

| Form No. | Title |
|---|---|
| 01330-A | Schedule of Values |
| 01330-B | Shop Drawings, Product Data and Sample Submittal Schedule |
| 01330-J | Allowance Use Request/Request for Change Order |
| 01330-K | Request for Information |
| 01332-A | Submittal Transmittal Form |
| 01600-A | Equipment Information Form Instructions |
| 01600-A | Equipment Information Form |
| 01600-B | Unit Responsibility Certification Form |
| 01620-A | Manufacturer's Installation Certification Form |
| 01781-A | Operation & Maintenance Manual Review Checklist |
| 01781-B | Operations & Maintenance Manual Data Review Checklist |
| 01821-A | Manufacturer's Instruction Certification Form |
| 17260-A | Factory Acceptance Test Report |

## PART 2 - PRODUCTS (NOT USED)

## PART 3 - EXECUTION (NOT USED)

+ + END OF SECTION + +

**Form 01330-A**

SCHEDULE OF VALUES

Sheet _____of _____

Section No. _____

| Item Description | Material | Labor | Equipment | Total |
|---|---|---|---|---|
| | | | | |

**Form 01330-B**

**SHOP DRAWINGS, PRODUCT DATA AND SAMPLE SUBMITTAL SCHEDULE**

CONTRACTOR _____
Project Name _____
Project No. _____ Date _____ Page ___ of_____

| Item No. | Description | Specification Section Number | Date To Be Submitted | Approval Needed By | Date Submitted | Date Reviewed | Transmittal Number | Status |
|---|---|---|---|---|---|---|---|---|
| | | | | | | | | |
| | | | | | | | | |
| | | | | | | | | |
| | | | | | | | | |
| | | | | | | | | |
| | | | | | | | | |
| | | | | | | | | |
| | | | | | | | | |
| | | | | | | | | |
| | | | | | | | | |
| | | | | | | | | |
| | | | | | | | | |
| | | | | | | | | |
| | | | | | | | | |
| | | | | | | | | |
| | | | | | | | | |

CITY OF CHANDLER: Municipal Utilities Department
PROJECT NAME: LARGE VALVE REPLACEMENT
PROJECT NUMBER: WW1504.401

**Form 01330-J**

CHANGE ORDER

**CITY OF CHANDLER**

☐ Form A ☐ Form B ☐ Form C

**CONTRACT CHANGE ORDER NO. X**



| PROJECT NUMBER<br>**WSXXXXXXXX-1** | PROJECT TITLE<br>**NAME OF PROJECT** | | |
|---|---|---|---|
| CONTRACT NUMBER<br>**XXXXX** | NAME OF CONTRACTOR<br>**NAME OF CONTRACTOR** | % COMPLETE($)<br>**XX%** | % TIME USED<br>**XX%** |

In accordance with this contract, the following change is ordered, resulting in: (Check all that apply).

☐ Increase in Contract Amount ☐ No Change in Contract Amount ☐ Decrease in Contract Amount
☐ Increase in Contract Time ☐ No Change in Contract Time ☐ Decrease in Contract Time

**DESCRIPTION:** **COST:** _____

**Work Change Directive No:**
**Prepared BY:**

| THIS CHANGE ORDER:<br>AMOUNT: $_____<br>TIME (Days): _____ | PRIOR CHANGE ORDER(S):<br>AMOUNT: $_____<br>TIME (Days): _____ | ORIGINAL CONTRACT:<br>AMOUNT: $ _____<br>TIME (Days): _____ | ADJUSTED CONTRACT:<br>AMOUNT: $ _____<br>TIME (Days): _____ |
|---|---|---|---|
| Notice to Proceed Date:<br>_____ | Original Contract Completion Date:<br>_____ | Adjusted Contract Completion Date:<br>_____ | |

We, the undersigned, have given careful consideration to the change proposed, and hereby agree, if this proposal is approved, that we will provide all equipment, furnish all materials, except as may otherwise be noted above, and perform all services necessary for the work specified, and will therefore, accept as full payment, the fees or prices and adjustments in contract time shown above. This Change Order includes all direct costs such as labor, material, job overhead, profit, costs for modifications or changes in sequence of work to be performed, delays, rescheduling, disruptions, extended direct overhead or general overhead, acceleration, material or other escalation which include wages and other impact costs.

REVIEWED BY:
_____ _____
(Engineer) DATE

RECOMMENDED BY:
_____ _____
(A or B - Project Manager) (C – Superintendent) DATE

**ACCEPTED (Contractor):**

COMPANY/FIRM:
**NAME OF CONTRACTOR**

SIGNATURE: _____

TITLE: _____ DATE: _____

PREPARED BY:

_____
PROJECT MANAGER

RECOMMENDED BY:
_____ _____
(A or B - Project Manager) (C – Superintendent) DATE

APPROVED BY:
_____ _____
(A or B - Superintendent) (C - Assistant Director) DATE

AUTHORIZED FOR THE CITY MANAGER BY:
_____ _____
(A or B - Assistant Director) (C – Director) DATE

**Form 01330-K**

**REQUEST FOR INFORMATION**

CONTRACTOR_____ RFI#_____
Requested By_____ Directed to _____
Subject_____ Date Received _____
Spec. Section_____ Date Transmitted _____
Drawing References_____ Date Reply Received _____
Date Reply Needed_____ Date Reply Transmitted _____

INFORMATION NEEDED:

Date _____ Signature _____

REPLY:

Date _____ Signature _____

Form 01332-A

# SUBMITTAL TRANSMITTAL

Project Name:_____ Project No.:_____

Contractor Name:_____ Contract No.: _____

Received By:_____ Date:_____

Provided By:_____ Transmittal No.:_____

Submittal Type: ☐ Pre-Construction ☐ Construction

☐ Substantial Completion ☐ Project Close Out

Submittal Description:_____ Section No.:_____

Submittal Review No.:_____

| | Date | No. Copies | Review Action | Review Comments Attached | | Review Check List Attached | | Reviewer Initials |
|---|---|---|---|---|---|---|---|---|
| **Contractor** | | | | **Yes** | **No** | **Yes** | **No** | |
| | | | | ☐ | ☐ | ☐ | ☐ | |
| **Engineer** | | | | ☐ | ☐ | ☐ | ☐ | |

Review Action: A - Approved; AC - Approved as Corrected; ACR - Approved as corrected Resubmit
RR - Revise and Resubmit; NR -Not Reviewed; NA - Not Approved
I - For Information Only

_____ _____
CONTRACTOR SIGNATURE/DATE ENGINEER SIGNATURE/DATE

**Form 01600-A**

EQUIPMENT INFORMATION FORM
INSTRUCTIONS

EACH PIECE OF EQUIPMENT PROVIDED WILL REQUIRE AN INDIVIDUAL EQUIPMENT INFORMATION FORM TO BE PROVIDED IN RESPECTIVE O&M MANUAL (I.E., PUMP AND MOTOR, FLOW METER AND TRANSMITTER, PUMP, MOTOR AND V.F.D., SLUICE GATES ETC.).

**TITLE BLOCK (HEADER):** INSERT PROJECT TITLE.

**FACILITY LOCATION:** LIST NAME OF WATER SERVICES DEPARTMENT FACILITY WHERE PROJECT IS LOCATED.

**SERVICE DESC:** PROVIDE DESCRIPTION AS STATED ON DRAWINGS, EXAMPLE: FOR THE DISCHARGE FLOWMETER ON PRIMARY SLUDGE PUMP #1, STATE: PRIMARY SLUDGE PUMP #1 DISCHARGE FLOW.

**PROCESS LOCATION:** WHERE IN THE PROCESS AT THIS FACILITY DOES ITEM RESIDE, (AS STATED ON THE DRAWINGS).

**DRAWING REF**: AS SHOWN ON THE ISSUED FOR CONSTRUCTION DRAWINGS. IF NOT AVAILABLE, LEAVE BLANK. (DO NOT STATE THE MANUFACTURERS DRAWINGS OR SCHEMATICS).

**"CMMS TAG" # AND SERIALIZED KEY #:** AS STATED ON DRAWINGS. IF NOT AVAILABLE, LEAVE BLANK.

**VENDOR:** PROVIDE NAME OF LOCAL EQUIPMENT REP/VENDOR, (I.E., HENNESY EQUIPMENT, JAMES, COOKE & HOBSON, SOUTHWEST CONTROLS, ETC.).

**ASSOC. EQUIP'T:** IF ITEM IS PART OF A LARGER PIECE OF EQUIPMENT, EXAMPLE: LUBE OIL PUMP ON BLOWER, THE BLOWER IS THE ASSOC. EQUIPMENT.

**MANUF:** MOYNO, FLYGT, MILLTRONICS, EATON, DEZURIK, TRANE, CARRIER, ETC.

**TYPE:** I.E., POSITIVE DISPLACEMENT, SUBMERSIBLE, CENTRIFUGAL, PORTABLE, SINGLE STAGE, TWO STAGE, ETC.

**SIZE:** VALVES AND GATES: LINE SIZE IN INCHES. AIR CONDITIONING SYSTEMS, OVERHEAD CRANES, AND BRIDGE CRANES: RATING IS IN TONS.

**Form 01600-A**

***LONE BUTTE WATER RECLAMATION FACILITY FILTER BACKWASH PUMP STATION AND FORCE MAIN***

**EQUIPMENT INFORMATION FORM**

Facility Location:_____ Date:_____

Service Desc:_____ Process Location:_____

Spec Section #:_____ Drawing Ref:_____

CMMS TAG #:_____ Serialized Key #:_____

Vendor:_____ Assoc. Equipment:_____

Manuf:_____ Type:_____

Model #:_____ Size:_____

Serial #:_____ GPM: _____

Temperature Range:_____ PSI Range:_____

CFM:_____ Operating Range:_____

**Electrical Equipment or Motor Data:**

Manufacturer Name:_____ Horsepower:_____ Volts:_____ Amp's:_____

Phase:_____ AC or DC:_____ RPM's:_____ Frame #:_____

Enclosure Nema Rating:_____ Service/Power Factor:_____ Insulation Class: _____

Miscellaneous Info:_____

_____

_____

**Mechanical Data:**

Belt Manufacturer:_____ Belt Model #:_____ Number of Belts:_____

Bearing Manufacturer:_____ Bearing Model #:_____

Weight Oil Used:_____ Amount Oil Required:_____

Miscellaneous Info:_____

_____

_____

**Form 01600-B**

**CERTIFICATE OF UNIT RESPONSIBILITY**

**LONE BUTTE WATER RECLAMATION FACILITY FILTER BACKWASH PUMP STATION AND FORCE MAIN**

**CERTIFICATE OF UNIT RESPONSIBILITY**
**for Specification Section _____**

**_____**
**(Section title)**

***In accordance with Paragraph 01600.1.2.B of the Contract Documents, the undersigned manufacturer accepts unit responsibility for all components of equipment furnished under specification Section _____. We hereby certify that these components are compatible and comprise a functional unit suitable for the specified performance and design requirements.***

_____
Notary Public

_____
Commission expiration date

Seal:

_____
Name of Corporation

_____
Address

By: _____
Duly Authorized Official

_____
Legal Title of Official

Date: _____

**Form 01620-A**

**MANUFACTURER'S INSTALLATION CERTIFICATION FORM**

Contract No.:_____ Specification Section:_____

Equipment Name:_____

CONTRACTOR: _____

Manufacturer of Equipment Item: _____

The undersigned manufacturer of the equipment item described above hereby certifies that he has checked the installation of the equipment and that the equipment, as specified in the Contract Documents, has been provided in accordance with the manufacturer's recommendations, and that the trial operation of the equipment item has been satisfactory.

Comments: _____

_____

_____

_____

_____

_____

Date:_____ Manufacturer

_____

Signature of Authorized Representative

Date:_____ CONTRACTOR

_____

Signature of Authorized Representative

**Form 01781-A**

## OPERATIONS & MAINTENANCE MANUAL REVIEW CHECKLIST

Project Name:_____ Project No.: _____

O&M Manual Title:_____

Manufacturer: _____ Specification No.: _____

| Item | Review Description | Contractor | | | Engineer | | |
|---|---|---|---|---|---|---|---|
| | | Yes | No | N/A | Yes | No | N/A |
| 1 | Final copies required hard/soft | ☐ | ☐ | ☐ | ☐ | ☐ | ☐ |
| 2 | O&M data review checklist Form 01781-B complete | ☐ | ☐ | ☐ | ☐ | ☐ | ☐ |
| 3 | Copy of Applicable Specification Section | ☐ | ☐ | ☐ | ☐ | ☐ | ☐ |
| 4 | Operating Instructions for each Piece of Equipment | ☐ | ☐ | ☐ | ☐ | ☐ | ☐ |
| 5 | Spare Parts and Supply List | ☐ | ☐ | ☐ | ☐ | ☐ | ☐ |
| 6 | Safety Precautions and MSDS of liquids | ☐ | ☐ | ☐ | ☐ | ☐ | ☐ |
| 7 | Equipment Manufacturer/Vendor/Installer Form | ☐ | ☐ | ☐ | ☐ | ☐ | ☐ |
| 8 | Warranty Information | ☐ | ☐ | ☐ | ☐ | ☐ | ☐ |
| 9 | As built Control Panel and Wiring Diagrams | ☐ | ☐ | ☐ | ☐ | ☐ | ☐ |
| 10 | Final Test Data | ☐ | ☐ | ☐ | ☐ | ☐ | ☐ |
| 11 | Disassembly/Reassembly, Alignment, Adjustment Checking Instructions | ☐ | ☐ | ☐ | ☐ | ☐ | ☐ |
| 12 | Installation Data and Instructions | ☐ | ☐ | ☐ | ☐ | ☐ | ☐ |
| 13 | Written Reference to CMMS Tag Number | ☐ | ☐ | ☐ | ☐ | ☐ | ☐ |
| 14 | Equipment Information Form | ☐ | ☐ | ☐ | ☐ | ☐ | ☐ |

_____ _____

CONTRACTOR'S SIGNATURE/DATE: ENGINEER'S SIGNATURE/DATE

(company logo)

PROJECT TITLE

**Reviewing Firm:**
**Date:**
**WS#:**
**Contract #:**
**Reviewed by:**

**SUBMITTAL #**
**(O&M MANUAL TITLE)**
**SPECIFICATION #:**
**EQUIPMENT MANUFACTURER:**
**PREPARED BY:**

OPERATIONS & MAINTENANCE DATA REVIEW CHECKLIST

| REQUIRED DATA | | ITEM COMPLETE | ITEM INCOMPLETE | COMMENT NO. |
|---|---|---|---|---|
| GENERAL FORMAT | | | | |
| Copies Required (Hard/Soft) with Proper Labeling | *01781-1.1.D.2*<br>*01781-1.1.D.3* | | | |
| Paper Quality | *01781-1.1.D.4.a* | | | |
| Typed/Printed Originals | *01781-1.1.D.4.b* | | | |
| D-Ring Binder/Triple Post | 01*781-1.1.D.4.c* | | | |
| Binder Identification | *01781-1.1.D.4.c* | | | |
| Dividers | *01781-1.1.D.4.d*<br>*01781-1.1.D.4.e* | | | |
| Index Tabs | *01781-1.1.D.4.d*<br>*01781-1.1.D.4.e* | | | |
| Table of Contents | *01781-1.1.D.4.d*<br>*01781-1.1.D.4.f* | | | |
| Identify Specific Components | *01781-1.1.D.4.g*<br>*01781-1.1.D.4.h* | | | |
| Final Test Data | *01781-1.1.C.1.b.10* | | | |
| OPERATIONS & MAINTENANCE DATA | | | | |
| Record Documents – “As Built” Information | 01781-1.1.C.1.b.8 | | | |

| REQUIRED DATA | ITEM COMPLETE | ITEM INCOMPLETE | COMMENT NO. |
|---|---|---|---|
| Equipment Information Form *01781-1.1.C.1.b.14* *01331 Form 01600-A* | | | |
| Operating Characteristics *01781-1.1.C.1.b.1* *01781-1.1.C.1.b.2* | | | |
| Startup Procedures *01781-1.1.C.1.b.2* | | | |
| Shutdown Procedures *01781-1.1.C.1.b.2* | | | |
| Preventive Maintenance Instructions *01781-1.1.C.1.b.3* *01781-1.1.C.2.a* *01781-1.1.C.2.b* | | | |
| Spare Parts List *01781-1.1.C.1.b.4* | | | |
| Safety/M.S.D.S./Chemical Quantity Information *01781-1.1.C.1.b.5* *01781-1.1.C.1.b.16* | | | |
| Manufacturer *01781-1.1.C.1.b.6* *01331 Form 01600-C* | | | |
| Manufacturers Local Service Representative *01781-1.1.C.1.b.6* | | | |
| Installer *01781-1.1.C.1.b.6* | | | |
| Warranty/Service Contract *01781-1.1.C.1.b.7* *General Conditions Guaranty-Warranty* | | | |
| As-built Wiring Diagrams *01781-1.1.C.1.b.8* & Nameplate Drawing *01781-1.1.C.1.b.9* | | | |
| Test Data *01781-1.1.C.1.b.10* | | | |
| Installation Instructions *01781-1.1.C.1.b.11* | | | |
| Installation Data *01781-1.1.C.1.b.12* | | | |
| Reference to Tag Number *01781-1.1.C.1.b.13* | | | |
| PREVENTIVE MAINTENANCE INSTRUCTIONS | | | |
| Tasks Required *01781-1.1.C.2.b.1* | | | |
| Recommended Schedule *01781-1.1.C.2.b.2* | | | |
| Lubrication Charts *01781-1.1.C.2.b.3* | | | |

| REQUIRED DATA | ITEM COMPLETE | ITEM INCOMPLETE | COMMENT NO. |
|---|---|---|---|
| Alternative Lubricants *01781-1.1.C.2.b.4* | | | |
| Trouble Shooting Instructions *01781-1.1.C.2.b.5* | | | |
| Identification of Maintenance Tools/Equipment *01781-1.1.C.2.b.6* | | | |
| Special Tools *01781-1.1.C.2.b.7* | | | |

**Comments:**

**1.**

_____

**Engineer** **Date**

CITY OF CHANDLER: Municipal Utilities Department
PROJECT NAME: LARGE VALVE REPLACEMENT
PROJECT NUMBER: WW1504.401

**Form 01821-A**

**MANUFACTURER'S INSTRUCTION CERTIFICATION FORM**

Contract No:_____Specification Section: _____ Equipment Name: _____

_____

CONTRACTOR: _____

Manufacturer of equipment item: _____

The undersigned manufacturer certifies that a service engineer has instructed the Plant operating personnel in the proper maintenance and operation of the equipment designated herein.

Operations Check List (check appropriate spaces)

| | |
|---|---|
| Start-up procedure reviewed. | _____ |
| Shutdown procedure reviewed. | _____ |
| Normal operation procedure reviewed. | _____ |
| Others: _____ | _____ |
| _____ | _____ |

Maintenance Check List (check appropriate spaces)

| | |
|---|---|
| Described normal oil changes (frequency). | _____ |
| Described special tools required. | _____ |
| Described normal items to be reviewed for wear. | _____ |
| Described preventive maintenance instructions. | _____ |
| Described greasing frequency. | _____ |
| Others: _____ | _____ |
| _____ | _____ |

_____ _____
Date Manufacturer

_____
Signature of Authorized Representative

_____ _____
Date Signature of OWNER'S Representative

_____ _____
Date Signature of CONTRACTOR'S
Representative

**Form 17260-A**

# FACTORY ACCEPTANCE TEST REPORT

PROJECT TITLE

**Witnessing Firm(s):**
**Testing Date:**
**Witnessed by:**

**Equipment Name:**
**Manufacturer:**
**Location of Test:**

REVIEW CHECKLIST

| REVIEW ITEMS | ITEM COMPLETE | ITEM INCOMPLETE | COMMENT NO. |
|---|---|---|---|
| PRIOR TO FACTORY ACCEPTANCE TEST | | | |
| Control Panels Shall Be Furnished In Accordance With The Requirements As Indicated On The Drawings And As Specified In Specification Division 16 | | | |
| Was The System Internally Tested By Manufacturer. | | | |
| Approved Submittal Available | | | |
| Panel Construction Fully Completed And Panel Clean Of Debris | | | |
| Programming Of All Devices And Logic Controllers Completed. | | | |
| Panel Drawings As-Built And Per Specifications | | | |
| Operations & Maintenance Manual Completed | | | |
| MECHANICAL INSPECTION | | | |
| Manufacturers UL 508 Label Installed | | | |
| Enclosure is NEMA Rated Per Specification 16486 | | | |
| Enclosure Door Seals, Gaskets, Alignment, Latches And Locking Mechanisms Installed And Functioning Properly | | | |
| Front Panel Name Plate(s) Installed Per Specifications | | | |

| REVIEW ITEMS | ITEM COMPLETE | ITEM INCOMPLETE | COMMENT NO. |
|---|---|---|---|
| Inner Door Mounted Nameplates And Components Installed Per Specifications | | | |
| Arc Flash Warning Labels Installed | | | |
| Internal Components Mounted Securely And Locations Are Per Approved Shop Drawings | | | |
| Wireways Covered | | | |
| All Wires Are Terminated And Labeled Per Specifications | | | |
| Spare Terminal Block Capacity Percentage Per Specifications | | | |
| Print Pocket Provided | | | |
| Enclosure Mounting Supports Provided | | | |
| PANEL COMPONENTS | | | |
| Components Are Per Bill Of Materials And Specifications | | | |
| Components Are UL Listed | | | |
| Light Fixture And Operation Switch Installed | | | |
| Grounding Studs And Bars For The Door, Backplane And Controls Installed For AC And DC Circuits | | | |
| Exhaust Fan Installed and Functioning | | | |
| Verify Motor Overload Relays Have Been Set For Each Motor Per NEC. | | | |
| All Internal Components Labeled Per Specification | | | |
| Wire Type, Colors, Size, Labeling, Routing And Terminations Per Specifications | | | |
| Spare Parts Provided | | | |
| PANEL TESTING | | | |
| Listed Test Equipment Used For The Factory Acceptance Test | | | |
| Verify Panel Is Grounded and Test All Panel Grounds | | | |
| Verify All Circuit Breaker And Fuse Sizes | | | |
| Verify Safety Circuits Are Fail Safe Including From The Panel To the Field Device | | | |

CITY OF CHANDLER: Municipal Utilities Department
PROJECT NAME: LARGE VALVE REPLACEMENT
PROJECT NUMBER: WW1504.401

| REVIEW ITEMS | ITEM COMPLETE | ITEM INCOMPLETE | COMMENT NO. |
|---|---|---|---|
| Power On Verification Test | | | |
| Measure Panel Power Consumption – Test Total System Current With System In Non-Loaded State.<br>Current Measured: _____ | | | |
| Circuit Breaker And/Or Disconnect Switch - Power On/Off/Lock-out Test | | | |
| Pilot Light Lamps Tested | | | |
| Test All Power Supply(s) Voltages<br>Power Measured: _____ | | | |
| Test All Pump Start/Stop Controls | | | |
| Verify All Starters, Relays And Contactors Activate As Required | | | |
| Verify On/Off Indication For All Relays | | | |
| Simulate All I/O As Near As Possible To The Installed System Configuration | | | |
| Simulate All Analog Signals Including Field Device Inputs By Varying The Analog Inputs Between 4 – 20 mA's DC - 0 To 100% Ranges. | | | |
| Verify All Calibrations And Set Points Of Panel Components | | | |
| Test Process Controller Power Failure | | | |
| Test All Start Up And Shut Down Sequence Procedures | | | |
| Test All Alarms | | | |

Comments:

# SECTION 01332

# SHOP DRAWING PROCEDURES

## PART 1 - GENERAL

### 1.1 DESCRIPTION

A. The submittal of Shop Drawings shall conform to requirements of General Conditions and procedures described in this Section. A separate transmittal form shall be used for each specific item or class of material or equipment for which a submittal is required. Transmittal of Shop Drawings on various items using a single transmittal form shall be permitted only when the items taken together constitute a manufacturer's "package" or are so functionally related that expediency indicates review of the group or package as a whole.

B. The term "Shop Drawings" as used herein shall be understood to include detailed design calculations, fabrication and installation drawings, lists, graphs, test data, operating instructions, and other items which shall include, but are not necessarily limited to:
   1. Drawings and catalog information and cuts.
   2. Specifications, parts list, suggested spare parts lists, and equipment drawings.
   3. Wiring diagrams of systems and equipment.
   4. Complete lubrication, maintenance and operation instructions, including initial startup instructions as described in Section 01821, Instruction of Operations and Maintenance Personnel.
   5. Applicable certifications.
   6. Anchor bolt templates, mounting instructions and mounting design calculations as required.
   7. Required maintenance operations to allow all installed equipment to remain idle for a period of time not to exceed 24 months.
   8. Other technical, installation, and maintenance data as applicable.
   9. Unloading and handling methods and storage requirements.
   10. Note, highlight, and explain proposed changes to the Contract Documents.
   11. Paint submittal showing type of paint and the mils thickness of coating system used. The coating system shall be the approved system as submitted under Division 9, Finishes.
   12. Drawings showing CONTRACTOR field verifications illustrating all field dimensions. Field verify all dimensions and existing materials shown on the Drawings. Any modifications required shall be at CONTRACTOR'S expense.

C. Preliminary Submittal Schedule: CONTRACTOR, within seven (7) days after the Notice of Award, shall prepare and submit to the ENGINEER a Preliminary Submittal Schedule. Identify on his Preliminary Submittal Schedule all of the submittal items required by the Contract Documents governing the Work.

D. Submittal Schedule: CONTRACTOR, within seven (7) days after the Notice to Proceed, shall prepare and submit to the ENGINEER a comprehensive Submittal Schedule. Identify on his Submittal Schedule all of the submittal items required by the Contract Documents governing his Work. Indicate, for each submittal item on his Submittal Schedule the following:

1. The date by which that item will be submitted to the ENGINEER.
2. Whether the submittal is for a substitute or "equal" item. Complete submittal for all substitute or "equal" items shall be made to the ENGINEER, in accordance with the Contract requirements. Identification by the CONTRACTOR of substitute or "equal" items does not relieve CONTRACTOR of his responsibility to furnish equipment and materials that meet all the requirements of the Contract Documents. Items of manufacturers' equipment listed with CONTRACTOR'S Bid Proposal shall not be replaced with any substitute or "equal" items as part of this Submittal Schedule process. Procedure for substitutions is specified under the General Conditions.
3. Whether the submittal is for review or "for record only".
4. The date by which response is required.
5. The date by which the material or equipment must be on site in order not to delay the progress of the Work.

E. In preparing his Submittal Schedule, consider the nature and complexity of each submittal item and shall allow ample time for review, revision or correction. Submittal will normally be returned to CONTRACTOR within 14 calendar days following receipt of the submittal. Complex submittals, for example, Instrumentation and Control Systems, Variable Frequency Drives and other such submittals may require additional review time. Identify submittal(s) for which long review periods are anticipated.

F. Hereby notified that the project electric motor requirements, specified in Section 11000, Electric Motors, do not allow standard "off the shelf" motors. Make provisions in the Submittal Schedule to account for longer manufacturing and delivery lead times for the motors and equipment requiring electric motors under this Project.

G. The ENGINEER will review CONTRACTOR'S Submittal Schedule to determine its completeness and compatibility with the Progress Schedule. A Submittal Schedule which is incompatible with the Progress Schedule or a review schedule which places extraordinary manpower demands on the ENGINEER will be sufficient reason(s) to reject the Submittal Schedule. It shall be understood that certain submittals will take

longer than 14 days to review and that these particular submittals will be identified during the review of the Submittal Schedule, by the ENGINEER to allow for very complex submittal reviews. Also, identify submittal for which he anticipates long review periods.

H. CONTRACTOR'S Submittal Schedule shall be consistent with the Progress Schedule as described in Section 01321, Progress Schedule.

I. Approval of the Submittal Schedule shall be required prior to processing of the first progress payment.

## 1.2 PROCEDURE

A. Submit Shop Drawings to: OWNER

B. A letter of transmittal shall accompany each submittal. If data for more than one Section of the Specifications is submitted, a separate transmittal letter shall accompany the data submitted for each Section.

C. All letters of transmittal shall be submitted in duplicate.

D. At the beginning of each letter of transmittal, provide a reference heading indicating the following:
   1. OWNER'S Name _____
   2. Project Name _____
   3. Contract No. _____
   4. Transmittal No. _____
   5. Section No. _____

E. If a Shop Drawing deviates from the requirements of the Contract Documents, specifically note each variation in his letter of transmittal.

F. All Shop Drawings submitted for approval shall have a title block with complete identifying information satisfactory to ENGINEER.

(The remainder of this page was left blank intentionally.)

G. All Shop Drawings submitted shall bear the stamp of approval and signature of CONTRACTOR as evidence that they have been reviewed and verified to the completeness of the submittal by CONTRACTOR. Submittal without this stamp of approval will not be reviewed by ENGINEER and will be returned to CONTRACTOR. CONTRACTOR'S stamp contain the following minimum information:

Project Name: _____

CONTRACTOR'S Name: _____

Date: _____

----------Reference----------

Item: _____

Specifications:

Section: _____

Page No.: _____

Para. No.: _____

Drawing No.: _____ of _____

Location: _____

Submittal No.: _____

Approved By: _____

H. In order to identify and track all submittals as separate and unique items, utilize the submittal identification numbering system as follows:

1. The Submittal Number shall be a separate and unique number correlating to each individual submittal that is required to be tracked as a separate and unique item. The Submittal Number shall be a two part, eight character, alpha/numeric number assigned by CONTRACTOR in the following manner:
   a. The first part of the Submittal Number shall consist of five characters that pertain to the applicable Specification Section number.
   b. The second part of the Submittal Number shall consist of three digits (numbers 001 to 999) to number each separate and unique submittal submitted under each Specification Section.
   c. A dash shall separate the two parts of the Submittal Number.
   d. A typical Submittal Number for the third Working Drawing submitted under Section 15101, Ductile Iron Pipe, would be 15101-003.

2. The Review Cycle shall be a three-digit number indicating the initial submission or resubmission of the same submittal. For example:

   001 = First (initial) submission
   002 = Second submission (first resubmission)
   003 = Third submission (second resubmission)

3. An example of the typical submittal identification numbers for the first submission of the third submittal submitted under Section 15101, Ductile Iron Pipe is:

| Submittal Number | Review Cycle |
|---|---|
| 15101-003 | 001 |

An example of the typical submittal identification numbers for the second submission of the third submittal submitted under Section 15101, Ductile Iron Pipe is:

| Submittal Number | Review Cycle |
|---|---|
| 15101-003 | 002 |

I. Initially submit to ENGINEER one (1) Electronic PDF format copies.

J. After ENGINEER completes his review, Shop Drawings will be affixed with a stamp and marked with one of the following notations:
   1. No Exceptions Taken
   2. Make Corrections Noted
   3. Amend and Resubmit
   4. Rejected
   5. Not Reviewed.
   6. For Information Only.

K. If a submittal is acceptable, the ENGINEER will mark it “No Exceptions Taken” or “Make Corrections Noted” and will forward one (1) electronic PDF format of the submittal to the OWNER for review and comment. The OWNERS review process will begin when all required copies of a specific submittal are received. After the OWNERS review is complete, the ENGINEERS and OWNERS comments will be combined and one (1) electronic PDF format of the submittal will be returned to CONTRACTOR.

L. Upon return of a submittal marked "No Exceptions Taken" or "Make Corrections Noted", CONTRACTOR may order, ship or fabricate the materials included on the submittal, provided it is in accordance with the corrections indicated.

M. If a Shop Drawing marked "Make Corrections Noted" has extensive corrections or corrections affecting other Shop Drawings or Work, ENGINEER may require that CONTRACTOR make the corrections indicated thereon and resubmit the Shop Drawings for record purposes. Such Shop Drawings will have the notation, "Make Corrections Noted - Resubmit." The corrected Shop Drawing shall be a pre-condition for payment for the work item of the Shop Drawing.

N. If a submittal is unacceptable, one (1) copy will be returned to CONTRACTOR with one of the following notations:
   1. "Amend and Resubmit"

O. Upon return of a submittal marked "Amend and Resubmit", make the corrections indicated and repeat the initial approval procedure. The "Not Approved" notation is used to indicate material or equipment that is not acceptable. Upon return of a submittal so marked, repeat the initial approval procedure utilizing acceptable material or equipment.

P. Any related Work performed or equipment installed without an "No Exceptions Taken" or "Make Corrections Noted" Shop Drawing will be at the sole responsibility of CONTRACTOR.

Q. Shop Drawings shall be submitted well in advance of the need for the material or equipment for construction and with ample allowance for the time required to make delivery of material or equipment after data covering such is approved. Assume the risk for all materials or equipment which are fabricated or delivered prior to the approval of Shop Drawings. Materials or equipment will not be included in periodic progress payments until approval thereof has been obtained in the specified manner.

R. ENGINEER will review and process all submittals promptly; a reasonable time shall be allowed for this, for the Shop Drawings being revised and resubmitted, and for time required to return the approved Shop Drawings to CONTRACTOR.

S. Responsibility belongs to CONTRACTOR to review submittals made by his suppliers and subcontractors before transmitting them to the ENGINEER to assure proper coordination of the Work and to determine that each submittal is in accordance with CONTRACTOR'S desires and that there is sufficient information about materials and equipment for ENGINEER to determine compliance with the Contract Documents. Incomplete or inadequate submittals will be returned for revision without review.

T. Furnish required submittals with complete information and accuracy in order to achieve required approval of an item within one submittal. Backcharges for resubmittals that account for a number greater than 20 percent of the total number of first time submittals and will be backcharged for all third submittals. The number of first time submittals shall be equal to the number of submittals agreed to by ENGINEER and CONTRACTOR in accordance with Section 01330. All costs to ENGINEER involved with subsequent submittal of Shop Drawings, Samples or other items requiring approval will be backcharged to CONTRACTOR at the rate of 3.0 times direct technical labor cost by deducting such costs from payments due CONTRACTOR for Work completed. In the event that CONTRACTOR requests a substitution for a previously approved item, all of ENGINEER'S costs in the reviewing and approval of the substitution will be backcharged to CONTRACTOR, unless the need for such substitution is beyond the control of CONTRACTOR.

U. The OWNER reserves the right to withhold monies, identified in the General Conditions, for Shop Drawing reviews beyond those described herein.

V. The ENGINEER will implement, if requested by CONTRACTOR, one special Shop Drawing Review Meeting. The purpose of the meeting is to expedite Shop Drawing reviews for the equipment and materials required for the first document of the Work. Requirements of this Section will not be waived, but could be expedited.

W. Mark each page of a submittal and each individual component submitted with the specification number, paragraph, and subparagraph. Arrange submittal information presentation to appear in the sequence in the Specification Section.

## PART 2 - PRODUCTS (NOT USED)

## PART 3 - EXECUTION (NOT USED)

+ + END OF SECTION + +

# SECTION 01412

# STORMWATER POLLUTION PREVENTION PLAN AND PERMIT

## PART 1 - GENERAL

### 1.1 DESCRIPTION

A. Comply with the terms and conditions of the National Pollutant Discharge Elimination System (NPDES) requirements under the Environmental Protection Agency (EPA) General Permit. Under provisions of that permit, CONTRACTOR is designated as permittee and responsible for providing necessary material and for taking appropriate measures to minimize pollutants in stormwater runoff from the Project. Obtain a DeMinimus discharge permit from EPA for any discharge that is to Waters of the U.S., and comply with the requirements of the permit.

B. The Contract Price shall include all material, labor and other permits and incidental costs related to:
   1. Preparing, updating and revising the Stormwater Construction Pollution Prevention Plan (SWPPP).
   2. Installing and maintaining all structural and non-structural items chosen by CONTRACTOR to comply with the construction SWPPP.
   3. Clean-up and disposal costs associated with clean-up and repair following storm events or CONTRACTOR caused spills on the Project.
   4. Implementing and maintaining Best Management Practices to comply with the OWNER'S stormwater code.
   5. Preparing the Notice of Intent and Notice of Termination shall be covered by the NPDES General Permit for Arizona.
   6. Obtain and comply with DeMinimus permit, if such permit is required.

C. Coordinate the requirements under this Section with Section 02315, Excavation and Backfill, permit requirements. All necessary SWPPP controls and practices must be implemented prior to commencement of any construction activity.

### 1.2 SUBMITTALS

A. Submit completed and signed Notice of Intent forms to the EPA at the following addresses:

1. Using the EPA's electronic NOI system:
   www.epa.gov/npdes/eNOI
2. For Regular U.S. Mail Delivery:
   EPA Stormwater Notice Processing Center
   Mail Code 4203M
   U.S. EPA
   1200 Pennsylvania Avenue, NW
   Washington, DC 20460
3. For Overnight/Express Mail Delivery:
   EPA Stormwater Notice Processing Center
   Room 7420
   U.S. EPA
   1201 Constitution Avenue, NW
   Washington, DC 20004

Authorization to discharge stormwater from construction activities under the terms and conditions of the permit is seven (7) calendar days after acknowledgement of receipt of your complete NOI is posted on EPA's NPDES website.

B. Submit to the OWNER, no later than 14 days before submitting to the State agency the following:
   1. Notice of Intent (NOI) to be covered by the NPDES General Permit for Arizona, including certifications of signature.
   2. SWPPP for the Project, including certification of signature. Stormwater Plan shall include CONTRACTOR'S proposed temporary means for stormwater control during all phases of construction and include stormwater pumping/retention plans. This submittal shall be coordinated with CONTRACTOR'S Excavation Plan submittal, specified in Section 02315, Excavation and Backfill.
   3. A manual has been prepared by the EPA to aid in CONTRACTOR'S preparation of the SWPPP. This manual is available from the EPA website at http://cfpub.epa.gov/npdes/stormwater/cgp.cfm.

C. Submit to the OWNER, as part of the Construction SWPPP a construction site inspection report that includes the following:
   1. Inspection scope.
   2. Inspector qualifications.
   3. Observations of SWPPP non-compliance and corrective steps taken.
   4. Certificate of Compliance with SWPPP and the NPDES General Permit for Stormwater Discharge in the event of no incidents. Reports shall be submitted each quarter, at a minimum, throughout the Contract duration.

D. Submit to the OWNER, upon project completion the Notice of Termination (NOT) of coverage under NPDES General Permit.

PART 2 - PRODUCTS (NOT USED)

PART 3 - EXECUTION (NOT USED)

+ + END OF SECTION + +

# SECTION 01420

# REFERENCES

## PART 1 - GENERAL

### 1.1 DEFINITIONS

A. General: Definitions of basic Contract terms are included in the General Conditions.

B. Definitions of terms commonly found in the Specifications are as follows:
   1. Indicated: The term indicated refers to graphic representations, notes, or schedules on the Drawings, or to other paragraphs or schedules in the Specifications and similar locations in the other Contract Documents. Terms such as “shown”, “noted”, “scheduled”, and “specified” are used to help the user locate the reference. There is no limitation on the location.
   2. Installer (or applicator, or erector): An installer is CONTRACTOR or another entity engaged by CONTRACTOR, either as an employee or subcontractor to perform a particular construction activity, including installation, erection, application or similar operations. Installers are required to be experienced in the operations they are engaged to perform.
      a. The term “experienced”, when used with the term “installer”, means having successfully completed a minimum of five previous projects similar in size and scope to this Project; being familiar with the special requirements indicated; and having complied with the requirements of authorities having jurisdiction and of the Supplier of the product being installed.
   3. Trades: Use of a term such as “carpentry” does not imply that certain construction activities must be performed by accredited or unionized individuals of a corresponding generic name, such as “carpenter”. It also does not imply that requirements specified apply exclusively to trades persons of the corresponding generic name.
   4. Assigned Specialists: Certain Sections of the Specifications require that specific construction activities shall be performed by specialists who are recognized experts in those operations. Said specialists shall be engaged for those activities, and their engagement is a requirement over which CONTRACTOR has no option. These requirements shall not be interpreted to conflict with the enforcement of building codes and similar regulations governing the Work. Also, they are not intended to interfere with local trade-union jurisdictional settlements and similar conventions. Such assignments shall not relieve CONTRACTOR of its responsibility for fulfilling the requirements of the Contract Documents.

5. Equipment Identification: Several terms define the information attached to equipment.
   a. The term "Manufacturer Nameplate" means information attached to equipment by the manufacturer pertaining to equipment criteria, such as capacity, power supply requirement, model number, etc.

## 1.2 ABBREVIATIONS

A. Common abbreviations, which may be found in the Specifications, are:

| | | |
|---|---|---|
| alternating current | | AC |
| Ampere | | A |
| ante meridiem | | am |
| Average | | avg. |
| biochemical oxygen demand | | BOD |
| brake horsepower | | BHP |
| British thermal unit | | BTU |
| Centigrade | | C |
| Company | | Co. |
| cubic inch | | cu. in. |
| cubic foot | | cu. ft. and cf |
| cubic yard | | cu. yd. and cy |
| cubic feet per minute | | cfm |
| cubic feet per second | | cfs |
| Decibel | | DB |
| degree Centigrade (or Celsius) | (Say) | 20°C |
| degree Fahrenheit | (Say) | 68°F |
| Diameter | | dia. |
| direct current | | DC |
| Dollars | | $ |
| Each | | ea |

| | |
|---|---|
| Efficiency | eff |
| Fahrenheit | F |
| feet per hour | fph |
| Feet | ft. |
| feet per minute | fpm |
| feet per second | fps |
| Figure | Fig. |
| Flange | flg |
| foot-pound | ft-lb |
| gallon | gal |
| gallons per minute | gpm |
| gallons per second | gps |
| gram | g |
| Hertz | Hz |
| horsepower | hp |
| hour | hr |
| inch | in. |
| inch-pound | in.-lb |
| inside diameter | id |
| kilovolt | kv |
| kilovolt-ampere | kva |
| kilowatt | KW |
| kilowatt-hour | kwhr |
| linear foot | lin. ft. and lf |
| liter | l |
| maximum | max. |
| mercury | Hg |
| milligram | mg |

| | |
|---|---|
| milligrams per liter | mg/l |
| milliliter | ml |
| millimeter | mm |
| million gallons per day | mgd |
| million gallon | mil |
| minimum | min. |
| National Pipe Threads | NPT |
| net positive suction head | npsh |
| number | No. |
| ounce | oz |
| on center | OC |
| outside diameter | OD |
| parts per million | ppm |
| post meridiem | pm |
| pound | lb |
| pounds per square inch | psi |
| pounds per square inch absolute | psia |
| pounds per square inch gage | psig |
| pounds per square foot | psf |
| revolutions per minute | rpm |
| second | sec. |
| specific gravity | sp gr |
| square | sq |
| square foot | sq ft and sf |
| square inch | sq in |
| square yard | sq yd and sy |
| standard | std |
| standard cubic feet per minute | scfm |

| | |
|---|---|
| total dynamic head | tdh |
| totally-enclosed-fan-cooled | tefc |
| volt | V |

## 1.3 APPLICABLE CODES

A. When a reference standard is specified, comply with requirements and recommendations stated in that standard, except when they are modified by the Contract Documents, or when applicable laws, ordinances, rules, regulations or codes establish stricter standards. The latest provisions of applicable standards shall apply to the Work, unless otherwise specified. Reference standards include, but are not necessarily limited to, the following:

1. American Association of State Highway and Transportation Officials (AASHTO).
2. American Concrete Institute (ACI).
3. American Gear Manufacturers Association (AGMA).
4. American Institute of Steel Construction (AISC).
5. American Iron and Steel Institute (AISI).
6. American National Standards Institute (ANSI).
7. American Society of Heating, Refrigerating and Air Conditioning Engineers (ASHRAE).
8. American Society of Mechanical Engineers (ASME).
9. American Society for Testing and Materials (ASTM).
10. American Water Works Association (AWWA).
11. American Welding Society (AWS).
12. Concrete Reinforcing Steel Institute (CRSI).
13. Factory Mutual (FM).
14. Institute of Electrical and Electronics Engineers (IEEE).
15. National Electrical Manufacturer's Association (NEMA).
16. National Electrical Code (NEC) current adoption.
17. Occupational Safety and Health Administration (OSHA).
18. National Fire Protection Association (NFPA).
19. Prestressed Concrete Institute (PCI).
20. Underwriters' Laboratories, Inc. (UL).
21. All other applicable standards listed in the Specifications and the standards of utility service companies, where applicable.
22. Maricopa Association of Governments (MAG), Uniform Standard Specifications for Public Works Construction, as supplemented by the City of Chandler. References to MAG Standard Details refer to the "Uniform Standard Details for Public Works Construction" sponsored and distributed by the Maricopa Association of Governments 2013, Arizona.
23. International Building Code (IBC).
24. National Electric Code – NFPA 70.
25. American Petroleum Institute (API).
26. Uniform Building Code.

27. International Energy Conservation Code.
28. Uniform Plumbing Code.
29. National Sanitation Foundation (NSF-61) and Arizona Administration Code (AAC # 18-4-213)
    a. Incorporate the requirements NSF-61, Drinking Water System Components Health Effects and AAC # 18-4-213, Standards for Additives, Materials and Equipment on all potable water systems, water treatment facilities and water distribution facilities.

## 1.4 OWNER'S REFERENCE SPECIFICATIONS

A. The Work, as may be otherwise specified, shall conform to the following Reference Specifications:

1. Maricopa Association of Governments, Uniform Standard Specifications for Public Works Construction.
2. Maricopa Association of Governments, Uniform Standard Details for Public Works Construction.
3. City of Chandler, Water & Wastewater System Design – Technical Design Manuals 1 & 2, February 2012.
4. City of Chandler Standard Specifications and Details, Revisions through 2013.
5. City of Chandler Supplement to Maricopa Association of Governments Uniform Standard Details and Specifications, Revisions through February 2013.
6. Arizona Department of Environmental Quality (ADEQ), Arizona Administrative Code Title 18, Chapter 9.

B. Maintain a complete copy of the Reference Specifications on the site.

## 1.5 INDUSTRY STANDARDS

A. Applicability of Standards: Except where the Contract Documents include more stringent requirements, applicable construction industry standards have the same force and effect as if bound or copied directly into the Contract Documents to the extent referenced. Such standards are made a part of the Contract Documents by reference.

B. Publication Dates: For applicable publication dates, refer to General Conditions.

C. Conflicting Requirements: Where compliance with two or more standards is specified and the standards establish different or conflicting requirements for

minimum quantities or quality levels, refer to ENGINEER for a decision before proceeding.

D. Copies of Standards: Each entity engaged in construction on the Project is required to be familiar with industry standards applicable to its construction activity. Copies of applicable standards are not bound with the Contract Documents. Where standards are required to perform a required construction activity, obtain copies of same from the publication source.

E. Abbreviations and Names: Whenever in these Specifications or the other Contract Documents references are made to the standards, specifications, or other published data of international, national, regional or local organizations, such organizations may be referred to by their acronym or abbreviation only. The following acronyms or abbreviations, which may appear in the Specifications, shall have the meanings indicated herein.

| | | |
|---|---|---|
| 1. | AA | Aluminium Association |
| 2. | AABC | Associated Air Balance Council |
| 3. | AAMA | American Architectural Manufacturers Association |
| 4. | AASHTO | American Association of State Highway and Transportation Officials |
| 5. | ACI | American Concrete Institute |
| 6. | ACS | American Chemical Society |
| 7. | AFBMA | Anti-Friction Bearing Manufacturers' Association |
| 8. | AGMA | American Gear Manufacturers Association |
| 9. | AI | Asphalt Institute |
| 10. | AIChE | American Institute of Chemical Engineers |
| 11. | AISC | American Institute of Steel Construction |
| 12. | AISI | American Iron and Steel Institute |
| 13. | AITC | American Institute of Timber Construction |
| 14. | ALS | American Lumber Standards |
| 15. | AMA | Acoustical Materials Association |
| 16. | AMCA | Air Movement and Control Association |
| 17. | ANSI | American National Standards Institute |
| 18. | APA | American Plywood Association |

| | | |
|---|---|---|
| 19. | API | American Petroleum Institute |
| 20. | APHA | American Public Health Association |
| 21. | AREA | American Railway Engineering Association |
| 22. | ARI | Air Conditioning and Refrigeration Institute |
| 23. | ASA | American Standards Association |
| 24. | ASAE | American Society of Agricultural Engineers |
| 25. | ASTM | American Society for Testing and Materials |
| 26. | ASCE | American Society of Civil Engineers |
| 27. | ASHRAE | American Society of Heating, Refrigerating and Air Conditioning |
| 28. | ASME | American Society of Mechanical Engineers |
| 29. | AWI | Architectural Woodwork Institute |
| 30. | AWPA | American Wood Preservers' Association |
| 31. | AWPB | American Wood Preservers Bureau |
| 32. | AWPI | American Wood Preservers' Institute |
| 33. | AWS | American Welding Society |
| 34. | AWWA | American Water Works Associations |
| 35. | BHMA | Builders Hardware Manufacturers' Association |
| 36. | CBMA | Certified Ballast Manufacturers' Association |
| 37. | CDA | Copper Development Association |
| 38. | CGA | Compressed Gas Association |
| 39. | CISPI | Cast Iron Soil Pipe Institute |
| 40. | CMAA | Crane Manufacturers' Association of America |
| 41. | CRSI | Concrete Reinforcing Steel Institute |
| 42. | EPA | Environmental Protection Agency |
| 43. | ETL | Engineering Test Laboratories |
| 44. | FCC | Federal Communications Commission |
| 45. | FEMA | Federal Emergency Management Agency |
| 46. | FGMA | Flat Glass Marketing Association |

| | | |
|---|---|---|
| 47. | FM | Factory Mutual Association |
| 48. | FS | Federal Specification |
| 49. | GA | Gypsum Association |
| 50. | HEW | Department of Health, Education and Welfare |
| 51. | HI | Hydraulic Institute |
| 52. | HMI | Hoist Manufacturers' Institute |
| 53. | HUD | Department of Housing and Urban Development |
| 54. | ICBO | International Conference of Building Officials |
| 55. | ICEA | Insulated Cable Engineers' Association |
| 56. | IEEE | Institute of Electrical and Electronic Engineers |
| 57. | IES | Illuminating Engineering Society |
| 58. | IFI | Industrial Fasteners Institute |
| 59. | IRI | Industrial Risk Insurers |
| 60. | ISA | The Instrumentation Systems and Automation Society |
| 61. | ISO | Insurance Services Office |
| 62. | MAG | Maricopa Association of Governments |
| 63. | MIA | Marble Institute of America |
| 64. | MS | Military Specifications |
| 65. | MMA | Monorail Manufacturers' Association |
| 66. | NAAMM | National Association of Architectural Metal Manufacturers |
| 67. | NACE | National Association of Corrosion Engineers |
| 68. | NARUC | National Association of Railroad and Utilities Commissioners |
| 69. | NBHA | National Builders Hardware Association |
| 70. | NEC | National Electrical Code |
| 71. | NEMA | National Electrical Manufacturers Association |
| 72. | NESC | National Electrical Safety Code |
| 73. | NFPA | National Fire Protection Association |
| 74. | NHLA | National Hardwood Lumber Association |

| | | |
|---|---|---|
| 75. | NHPMA | Northern Hardwood and Pine Manufacturer's Association |
| 76. | NLMA | National Lumber Manufacturers' Association |
| 77. | NRCA | National Roofing Contractors Association |
| 78. | NSF | National Sanitation Foundation |
| 79. | NTMA | National Terrazzo and Mosaic Association |
| 80. | NWWDA | National Wood Window and Door Association |
| 81. | OECI | Overhead Electrical Crane Institute |
| 82. | OSHA | Occupational Safety and Health Administration |
| 83. | PCI | Precast Concrete Institute |
| 84. | PEI | Porcelain Enamel Institute |
| 85. | PPI | Plastic Pipe Institute |
| 86. | PS | Product Standards Section-U.S. Department of Commerce |
| 87. | RMA | Rubber Manufacturers' Association |
| 88. | SAE | Society of Automotive Engineers |
| 89. | SCPRF | Structural Clay Products Research Foundation |
| 90. | SDI | Steel Deck Institute |
| 91. | SDI | Steel Door Institute |
| 92. | SIGMA | Sealed Insulating Glass Manufacturing Association |
| 93. | SJI | Steel Joist Institute |
| 94. | SMACNA | Sheet Metal and Air Conditioning National Association |
| 95. | SPI | Society of the Plastics Industry |
| 96. | SSPC | The Society for Protective Coatings |
| 97. | SWI | Steel Window Institute |
| 98. | TEMA | Tubular Exchanger Manufacturers' Association |
| 99. | TCA | Tile Council of America |
| 100. | UL | Underwriters' Laboratories, Inc. |
| 101. | USGS | United States Geological Survey |
| 102. | USPHS | United States Public Health Service |

| | | |
|---|---|---|
| 103. | WCLIB | West Coast Lumber Inspection Bureau |
| 104. | WWEMA | Water and Wastewater Equipment Manufacturers Association |
| 105. | WWPA | Western Wood Products Association |

PART 2 - PRODUCTS (NOT USED)

PART 3 - EXECUTION (NOT USED)

+ + END OF SECTION + +

# SECTION 01452

# TESTING LABORATORY SERVICES FURNISHED BY CONTRACTOR

## PART 1 - GENERAL

### 1.1 DESCRIPTION

A. Employ and pay for an independent testing laboratory to perform the specified services. Laboratory selected shall be subject to approval by the ENGINEER.

### 1.2 QUALIFICATIONS OF LABORATORY

A. Where applicable, meet "Recommended Requirements for Independent Laboratory Qualification," latest edition, published by American Council of Independent Laboratories and the basic requirements of ASTM E 329, "Standards of Recommended Practice for Inspection and Testing Agencies for Concrete and Steel as Used in Construction." Laboratory shall be authorized to operate in the State of Arizona.

B. Submit five copies of report of inspection of facilities made by Materials Reference Laboratory of National Bureau of Standards, for the most recent tour of inspection, with memorandum of remedies of any deficiencies reported by inspection.

C. Testing Equipment:
   1. Calibrated, at maximum 12-month intervals by devices of accuracy traceable to either National Bureau of Standards or accepted values of natural physical constants.
   2. Submit copy of certificate of calibration made by an accredited calibration agency.

### 1.3 LABORATORY DUTIES

A. Cooperate with ENGINEER and provide qualified personnel promptly on notice.

B. Perform specified inspections, sampling and testing of materials and methods of construction; comply with applicable standards; and ascertain compliance with requirements of Contract Documents.

C. Promptly notify ENGINEER and CONTRACTOR of any irregularities or deficiencies of Work that are observed during performance of services.

D. Promptly submit five copies of reports of inspections and tests to ENGINEER, including:

1. Date issued.
2. Project title and number.
3. Testing laboratory name and address.
4. Name and signature of inspector.
5. Date of inspection or sampling.
6. Record of temperature and weather.
7. Date of test.
8. Identification of product and Specification Section.
9. Location in Work.
10. Type of inspection or test.
11. Results of tests and observations regarding compliance with Contract Documents.

E. Perform additional tests and services as required to ensure compliance with the Contract Documents.

## 1.4 CONTRACTOR'S COORDINATION WITH LABORATORY

A. Cooperate with laboratory personnel, and provide access to Work and to manufacturer's operations.

B. Provide to laboratory representative samples of materials to be tested, in quantities required by the laboratory for testing.

C. Furnish labor and facilities:
1. To provide access to Work to be tested.
2. To obtain and handle samples at the site.
3. To facilitate inspections and tests.
4. For laboratory's exclusive use for storage and curing of test samples.
5. Forms for preparing concrete test beams and cylinders.

D. Notify laboratory and ENGINEER sufficiently in advance of operations to allow for assignment of personnel and scheduling of tests.

E. Arrange with laboratory and pay for, additional samples and tests required for CONTRACTOR'S convenience.

## 1.5 PRODUCT TEST REPORTS

A. Furnish copies of product test reports where required by the Specifications or requested by ENGINEER.

# PART 2 - PRODUCTS (NOT USED)

PART 3 - EXECUTION (NOT USED)

+ + END OF SECTION + +

# SECTION 01550

# ACCESS ROADS AND PARKING AREAS

## PART 1 - GENERAL

### 1.1 DESCRIPTION

A. Provide all temporary construction roads, walks and parking areas required during the construction and for use of emergency vehicles. Temporary roads and parking areas shall be designed and maintained by CONTRACTOR so as to be fully usable in all weather conditions.

B. Prevent interference with traffic and the OWNER'S operations on existing roads. Indemnify and save harmless the OWNER from any expenses caused by CONTRACTOR'S operations over these roads.

C. Roadway damage shall be restored to the original condition by CONTRACTOR subject to approval of the OWNER or ENGINEER.

D. Temporary roads, walks and parking areas shall be removed by CONTRACTOR, prior to Final Acceptance, and the ground returned to its original condition, unless otherwise required by the Contract Documents.

### 1.2 DESIGNATED PARKING

A. All CONTRACTOR'S employee vehicles shall park in an area specifically designated for that purpose, as more fully described in Section 01561, Security.

### 1.3 MAINTENANCE OF ROADS

A. At all times maintain approved access for trucks to loading areas of the plant and parking facilities for plant personnel. All parking of construction vehicles shall be in approved lots.

B. Dust resulting from construction shall be controlled by CONTRACTOR to prevent a nuisance on the site or in adjacent areas. Apply water or use other methods subject to the ENGINEER'S approval, which will keep dust in the air to a minimum. Use of water will not be permitted when it results in hazardous or objectionable conditions such as ice, mud, ponds and pollution.

C. Provide temporary heavy duty steel roadway plates to protect existing manholes, handholes, valve boxes and vaults.

PART 2 - PRODUCTS (NOT USED)

PART 3 - EXECUTION (NOT USED)

+ + END OF SECTION + +

# SECTION 01561

# SECURITY

## PART 1 - GENERAL

### 1.1 DESCRIPTION

A. Safely guard all Work, materials, equipment and property from loss, theft, damage and vandalism. CONTRACTOR'S duty to safely guard property shall include the OWNER'S property and other private property from injury or loss in connection with the performance of the Work.

B. Employ watchmen as required to provide the required security and prevent unauthorized entry.

C. Make no claim against the OWNER for damage or injury resulting from trespass.

D. Responsible for security and shall make good all damage to property of OWNER and others arising from failure to provide adequate security. The standard for security shall be, at a minimum, equivalent to the owner's standards.

E. If the existing fencing or barriers are breached or removed for purposes of construction, provide and maintain temporary security fencing equal to the existing in a manner satisfactory to the ENGINEER and OWNER. Provide additional security staff, if required, to maintain the security of the facility.

F. Security measures taken shall be at least equal to those usually provided by OWNER to protect his existing facilities during normal operation.

G. Maintain security program throughout the Work until OWNER'S acceptance and occupancy precludes need for CONTRACTOR'S security program.

H. Comply with all aspects of OWNER'S site specific Security Guard Protocol. This shall include background checks equivalent to those conducted by the owner.

I. All costs for security as specified in this Section shall be borne by CONTRACTOR.

### 1.2 CONTRACTOR'S ACCESS TO THE SITE

A. Access to the site for CONTRACTOR'S employees, material, tools and equipment shall be from plant entrance only.

B. Ensure that each of his employees, representatives, delivery persons, suppliers and others acting for CONTRACTOR, shall be subject to the following regulations:
   1. CONTRACTOR'S subcontractor's, suppliers and manufacturer's employee's shall not park anywhere other than CONTRACTOR Employee's Parking Area. The Area shall be designated by the ENGINEER. Prepare and maintain this area, as required.
   2. All vehicles, including those belonging to CONTRACTOR, his employees and subcontractors, delivery persons and suppliers entering the plant site shall conform to all security and safety regulations in force at the site. All vehicles entering and leaving the facility are subject to search.
   3. Personal vehicles shall not be allowed outside CONTRACTOR'S Employee Parking Area.
   4. Delivery vehicles shall access the site from the designated construction entrance road stated in Paragraph 1.2 A. above.
   5. Access to the site from any other entrance is strictly prohibited, unless prior approval is obtained from the owner. Violators shall be banned from the site.
   6. Firearms are not allowed on project site.

PART 2 - PRODUCTS (NOT USED)

PART 3 - EXECUTION (NOT USED)

+ + END OF SECTION + +

# SECTION 01651

# TRANSPORTATION AND HANDLING OF MATERIALS AND EQUIPMENT

## PART 1 - GENERAL

### 1.1 DESCRIPTION

A. Make all arrangements for transportation, delivery and handling of equipment and materials required for prosecution and completion of the Work.

B. Shipments of materials to CONTRACTOR or subcontractors shall be delivered to the site only during regular working hours. Shipments shall be addressed and consigned to the proper party giving name of Project, street number and city. Shipments shall not be delivered to OWNER, except where otherwise directed.

C. If necessary to move stored materials and equipment during construction, move materials and equipment without any additional compensation.

### 1.2 PREPARATION FOR SHIPMENT

A. When practical, factory assemble products. Matchmark or tag separate parts and assemblies to facilitate field assembly. Cover machined and unpainted parts that may be damaged by the elements with a strippable protective coating.

B. Package products to facilitate handling and protect from damage during shipping, handling, and storage. Mark or label outside of each package or crate to indicate its purchase order number, bill of lading number, contents by name, OWNER'S contract name and number, CONTRACTOR, equipment number, and approximate weight. Include complete packing lists and bills of materials with each shipment.

C. Protect products from exposure to the elements and keep thoroughly dry and dust free at all times. Protect painted surfaces against impact, abrasion, discoloration, or other damage. Grease or oil all bearings and similar items.

D. Do not have products shipped until:
   1. Related Shop Drawings have been approved by ENGINEER.
   2. Related factory test results, required in the individual Specification Sections, have been reviewed and accepted by ENGINEER.
   3. Required storage facilities have been provided.

E. Items shall be supported, packaged and stored in such a way so as not to impose undue stress/forces to couplings, connections, supports, valves, equipment and instruments.

## 1.3 DELIVERY

A. Arrange, with the United States Postal Service, a special address for the Project. All deliveries shall be made to that address.

B. Arrange deliveries of products in accordance with construction schedules and in ample time to facilitate inspection prior to installation.

C. Coordinate deliveries to avoid conflict with Work and conditions on site and to accommodate the following:
   1. Work of other contractors, or OWNER.
   2. Limitations of storage space.
   3. Availability of equipment and personnel for handling products.
   4. OWNER'S use of premises.

D. Do not have products delivered to Project site until related Shop Drawings have been approved by the ENGINEER.

E. Do not have products delivered to Project site until required storage facilities have been provided.

F. Have products delivered to site in manufacturer's original, unopened, labeled containers. Keep ENGINEER informed of delivery of all equipment to be incorporated in the Work.

G. Partial deliveries of component parts of equipment shall be clearly marked to identify the equipment, to permit easy accumulation of parts and to facilitate assembly.

H. Immediately on delivery, inspect shipment to assure:
   1. Product complies with requirements of Contract Documents and reviewed submittal.
   2. Quantities are correct.
   3. Containers and packages are intact, and labels are legible.
   4. Products are properly protected and undamaged.

I. Promptly remove damaged products from the Project site and expedite delivery of new undamaged products, and remedy incomplete or lost products to provide that specified, so as not to delay progress of the Work.

## 1.4 PRODUCT HANDLING

A. Provide equipment and personnel necessary to handle products, including those provided by OWNER, by methods to prevent soiling or damage to products or packaging.

B. Provide additional protection during handling as necessary to prevent scraping, marring or otherwise damaging products or surrounding surfaces.

C. Handle products by methods to prevent bending or overstressing.

D. Lift heavy components only at designated lifting points.

E. Materials and equipment shall at all times be handled in a safe manner and as recommended by manufacturer or supplier so that no damage will occur to them. Do not drop, roll or skid products off delivery vehicles. Hand carry or use suitable materials handling equipment.

PART 2 - PRODUCTS (NOT USED)

PART 3 - EXECUTION (NOT USED)

+ + END OF SECTION + +

# SECTION 01661

# STORAGE OF MATERIALS AND EQUIPMENT

## PART 1 - GENERAL

### 1.1 DESCRIPTION

A. Store and protect materials in accordance with manufacturer's recommendations and requirements of Specifications.

B. Make all arrangements and provisions necessary for the storage of materials and equipment. All excavated materials, construction equipment, and materials and equipment to be incorporated into the Work shall be placed so as not to injure any part of the Work or existing facilities and so that free access can be maintained at all times to all parts of the Work and to all public utility installations in the vicinity of the Work. Materials and equipment shall be kept neatly and compactly stored in locations that will cause a minimum of inconvenience to other contractors, public travel, adjoining owners, tenants and occupants. Arrange storage in a manner to provide easy access for inspection.

C. Areas available on the site for storage of materials and equipment shall be as shown or approved by the ENGINEER.

D. Materials and equipment, which are to become the property of the OWNER, shall be stored to facilitate their inspection and ensure preservation of the quality and fitness of the Work, including proper protection against damage by freezing, moisture and summer temperatures with ambient temperatures as high as 120°F. They shall be placed in inside climate storage areas, unless otherwise acceptable to OWNER. When placing orders to suppliers for equipment and controls containing computer chips, electronics and solid-state devices, request and coordinate specific temperature limitations on equipment since cabinets and components stored in the summer can approach temperatures of 200°F.

E. Be fully responsible for loss or damage, including theft, to stored materials and equipment.

F. Do not open manufacturer's containers until time of installation, unless recommended by the manufacturer or otherwise specified.

G. Do not store products in the structures being constructed, unless approved in writing by the ENGINEER.

## 1.2 PROTECTION

A. Equipment shall be boxed, crated or otherwise completely enclosed and protected during shipment, handling and storage. Each container or piece of equipment shall be clearly marked with CONTRACTOR'S name, project name and location. Equipment shall be stored on raised supports protected from exposure to the elements and shall be kept thoroughly dry at all times. Pumps, motors, drives, electrical equipment, instrumentation equipment (controls, devices, panels, etc.) and other equipment having anti-friction or sleeve bearings shall be stored in weathertight storage facilities, such as warehouses. Covering with visquine or similar material shall not be considered as a weathertight enclosure.

B. Painted surfaces shall be protected against impact, abrasion, discoloration and other damage. Painted equipment surfaces, which are damaged prior to acceptance, shall be repainted in entirety to the satisfaction of the ENGINEER.

C. Electrical equipment, controls, and instrumentation shall be protected against moisture, water damage, heat or dust. Space heaters provided in the equipment shall be connected and operating at all times until equipment is placed in operation.

D. Items shall be stored in such a way so as not to impose undue stress/forces to couplings, connections, supports, valves, equipment and instruments.

## 1.3 UNCOVERED STORAGE

A. The following types of materials may be stored outdoors without cover:
   1. Masonry units.
   2. Reinforcing steel.
   3. Structural steel.
   4. Piping, except PVC.
   5. Precast concrete items.
   6. Castings.

B. Store the above materials on wood blocking so there is no contact with the ground.

## 1.4 COVERED STORAGE

A. The following types of materials may be stored outdoors if covered with material impervious to water:
   1. Rough lumber.
   2. Handrailing.
   3. PVC Piping.
   4. Filter Media.

B. Tie down covers with rope and slope to prevent accumulation of water on covers.

C. Store materials on wood blocking or skids.

D. Store loose granular materials, covered with materials impervious to water, in a well-drained area or solid surfaces to prevent mixing with foreign matter.

## 1.5 FULLY PROTECTED STORAGE

A. Store all products not named above in buildings or trailers which have a concrete or wooden floor, a roof, and fully closed walls on all sides.

B. Provide heated storage space for materials which could be damaged by freezing.

C. Provide air-conditioned storage space for materials that could be damaged by Arizona's severe high temperatures.

D. Protect mechanical and electrical equipment from being contaminated by dust, dirt and moisture.

E. Maintain humidity at levels recommended by manufacturers for electrical and electronic equipment.

## 1.6 MAINTENANCE OF STORAGE

A. Maintain periodic system of inspection of stored products on a scheduled basis to assure that:
   1. State of storage facilities is adequate to provide required conditions.
   2. Required environmental conditions are maintained on a continuing basis.
   3. Products exposed to elements are not adversely affected.

B. Mechanical and electrical equipment which require long term storage shall have complete manufacturer's instructions for servicing each item with notice of enclosed instructions shown on exterior of package.
   1. Comply with manufacturer's instructions on a scheduled basis.
   2. Space heaters which are part of electrical equipment shall be connected and operated continuously until equipment is placed in service.

## 1.7 PANEL AND INSTRUMENTATION STORAGE

A. All panels, microprocessor-based equipment and all other devices subject to damage or useful life decrease, because of temperatures below 40°F or above 100°F, relative humidity above 90 percent, or exposure to rain or exposure to blowing dust shall not be stored on site.

B. Storage shall be in an insured, climate-controlled warehouse within Maricopa County. The OWNER shall have the right to inspect the equipment during normal

working hours. Placed inside each panel or device shall be a desiccant, volatile corrosion inhibitor blocks (VCI), a moisture indicator and maximum-minimum indicating thermometer. The panels and equipment shall be checked once per month. The desiccant, VCI and moisture indicator shall be replaced as often as required or every six months, whichever occurs first. A certified record of the daily maximum and minimum temperature and humidity in the warehouse shall be available for inspection by the OWNER. A certified record of the monthly inspection, noting maximum and minimum temperature for the month, condition of desiccant, VIC and moisture indicator, shall also be available for inspection by the OWNER.

C. All costs for the storage shall be at no additional cost to the OWNER. Any panel or device which has been damaged by any cause or for which the storage temperatures or humidity range has been exceeded shall be replaced at no additional cost to the OWNER and shall not be cause for a delay in Contract completion.

D. The panels and equipment shall not be shipped to the site until field conditions are ready for installation, including all slabs, walls, roofs, and environmental controls. The failure to have the site ready for installation shall not relieve CONTRACTOR from conforming to all of the Contract requirements.

## 1.8 RECORDS

A. Keep running account of products in storage to facilitate preparation of progress payments, if Agreement provides for payment for products delivered, but not installed in the Work.

B. A record shall be kept of the storage requirements and a continuous maintenance log for all stored equipment. A tag shall be applied to each piece of equipment showing all service dates and who did the service.

## PART 2 - PRODUCTS (NOT USED)

## PART 3 - EXECUTION (NOT USED)

+ + END OF SECTION + +

# SECTION 01721

# PROTECTION OF THE WORK AND PROPERTY

## PART 1 - GENERAL

### 1.1 DESCRIPTION

A. Be responsible for taking all precautions, providing all programs, and taking all actions necessary to protect the Work and all public and private property and facilities from damage as specified in the General Conditions and herein.

B. In order to prevent damage, injury or loss, CONTRACTOR'S actions shall include, but not be limited to, the following:
   1. Store apparatus, materials, supplies, and equipment in an orderly, safe manner that will not unduly interfere with the progress of the Work or the work of any other contractor or utility service company.
   2. Provide suitable storage facilities for all materials which are subject to injury by exposure to weather, theft, breakage, or otherwise.
   3. Place upon the Work or any part thereof only such loads as are consistent with the safety of that portion of the Work.
   4. Clean up frequently all refuse, rubbish, scrap materials, and debris caused by his operations, to the end that at all times the site of the Work shall present a safe, orderly and workmanlike appearance.
   5. Provide barricades and guard rails around openings, for scaffolding, for temporary stairs and ramps, around excavations, elevated walkways and other hazardous areas.

C. Shall not, except after written consent from proper parties, enter or occupy privately-owned land with personnel, tools, materials or equipment, except on easements provided herein.

D. Assume full responsibility for the preservation of all public and private property or facility on or adjacent to the site. If any direct or indirect damage is done by or on account of any act, omission, neglect or misconduct in the execution of the Work by CONTRACTOR, it shall be restored by CONTRACTOR, at his expense, to a condition equal to that existing before the damage was done.

E. CONTRACTOR shall be responsible for any staking/roping needed to identify the contractual limits of construction activities.

### 1.2 BARRICADES AND WARNING SIGNALS

A. Where Work is performed on or adjacent to any roadway, right-of-way, or public place, provide barricades, fences, lights, warning signs, danger signals, watchmen, and shall take other precautionary measures for the protection of persons or property and of the Work. Barricades shall be painted to be visible at night. From sunset to sunrise, furnish and maintain at least one light at each barricade. Sufficient barricades shall be erected to keep vehicles from being driven on or into Work under construction. Furnish watchmen in sufficient numbers to protect the Work. CONTRACTOR'S responsibility for the maintenance of barricades, signs, lights, and for providing watchmen shall continue until the Project is accepted by OWNER.

## 1.3 PROTECTION OF EXISTING STRUCTURES

A. Underground Structures:
   1. Underground structures are defined to include, but are not limited to, all sewer, water, gas, and other piping, and manholes, chambers, electrical conduits, tunnels and other existing subsurface work located within or adjacent to the limits of the Work.
   2. All underground structures known to ENGINEER, except water, gas, sewer, electric, and telephone service connections, are shown. This information is shown for the assistance of CONTRACTOR, in accordance with the best information available, but is not guaranteed to be correct or complete.
   3. Explore ahead of trenching and excavation Work and shall uncover all obstructing underground structures sufficiently to determine their location, to prevent damage to them and to prevent interruption to the services which such structures provide. If CONTRACTOR damages an underground structure, he shall restore it to original condition at his expense.
   4. Necessary changes in the location of the Work may be made by ENGINEER to avoid unanticipated underground structures.
   5. If permanent relocation of an existing underground structure or other subsurface facility is required and is not otherwise provided for in the Contract Documents, ENGINEER will direct CONTRACTOR, in writing, to perform the Work, which shall be paid for under the provisions of the General Conditions.

B. Surface Structures:
   1. Surface structures are defined as all existing buildings, structures and other facilities above the ground surface. Included with such structures are their foundations or any extension below the surface. Surface structures include, but are not limited to, buildings, tanks, walls, bridges, roads, dams, channels, open drainage, piping, poles, wires, posts, signs, markers, curbs, walks and all other facilities that are visible above the ground surface.

C. Protection of Underground and Surface Structures:

1. Sustain in their places and protect from direct or indirect injury all underground and surface structures located within or adjacent to the limits of the Work. Such sustaining and supporting shall be done carefully and as required by the party owning or controlling such structure. Before proceeding with the Work of sustaining and supporting such structure, satisfy the ENGINEER that the methods and procedures to be used have been approved by the party owning same.
2. Assume all risks attending the presence or proximity of all underground and surface structures within or adjacent to the limits of the Work. Be responsible for all damage and expense for direct or indirect injury caused by his Work to any structure. Repair immediately all damage caused by his Work, to the satisfaction of the owner of the damaged structure.

D. All other existing surface facilities, including but not limited to, guard rails, posts, guard cables, signs, poles, markers, and curbs, which are temporarily removed to facilitate installation of the Work, shall be replaced and restored to their original condition at CONTRACTOR'S expense.

## 1.4 PROTECTION OF INSTALLED PRODUCTS AND LANDSCAPING

A. Provide protection of installed products to prevent damage from subsequent operations. Remove protection facilities when no longer needed prior to completion of Work.

B. Control traffic to prevent damage to equipment, materials and surfaces.

C. Provide coverings to protect equipment and materials from damage.
   1. Cover projections, wall corners and jambs, sills and soffits of openings, in areas used for traffic and for passage of products in subsequent work.

## PART 2 - PRODUCTS (NOT USED)

## PART 3 - EXECUTION (NOT USED)

+ + END OF SECTION + +

# SECTION 01724

# CONNECTIONS TO EXISTING FACILITIES

## PART 1 - GENERAL

### 1.1 DESCRIPTION

A. Perform all construction necessary to complete connections and tie-ins to existing facilities.

B. Keep existing facilities in operation unless otherwise specifically permitted in these Specifications or approved by OWNER.

C. Perform all construction activities so as to avoid interference with operations of the facility and the work of others.

### 1.2 BYPASSING

A. Bypassing of plant flow will be permitted only for brief intermittent periods necessary to make the connections.

### 1.3 SEQUENCING AND OPERATIONS

A. All operations of existing valves and gates required for the Work shall be done by OWNER.

B. Insofar as possible, all equipment shall be tested and in operating condition before the final tie-ins are made to connect equipment to the existing facility.

C. Carefully coordinate all Work and schedules and shall provide OWNER written notice at least 48 hours before shut-downs or by-passes are required.

D. Work Sequence: Sequence of Work and Schedule of Completion is specified under Section 01111, Schedule of Completion, Section 01143, Coordination with OWNER'S Operations, and shown on the Construction Sequence Diagrams included in the Drawings.

### 1.4 SUBMITTALS

A. For any tie-ins/connections or required shutdowns to existing mains and systems, the CONTRACTOR shall submit a shutdown/tie-in plan to Water Distribution personnel and Engineering and shall be approved at least two weeks prior to the start of the event. The plan shall include dates, durations, procedures, staffing, and any other information pertinent to shutting down the system and connecting to a new system.

PART 2 - PRODUCTS (NOT USED)

PART 3 - EXECUTION (NOT USED)

+ + END OF SECTION + +

# SECTION 01740

# CLEANING

## PART 1 - GENERAL

### 1.1 DESCRIPTION

A. Execute cleaning, during progress of the Work, at completion of the Work, and as required by General Conditions. If CONTRACTOR fails to clean areas as specified in this Section, the OWNER will have the areas cleaned and backcharge CONTRACTOR.

### 1.2 REQUIREMENTS OF REGULATORY AGENCIES:

A. In addition to the requirements herein, maintain the cleanliness of the Work and surrounding premises within the Work limits so as to comply with federal, state, and local fire and safety laws, ordinances, codes and regulations.

B. Comply with all federal, state and local anti-pollution laws, ordinances, codes and regulations when disposing of waste materials, debris and rubbish.

### 1.3 PROGRESS CLEANING:

A. General: Clean the Site, Work areas and other areas CONTRACTOR is permitted to occupy by Laws and Regulations at least weekly. Dispose of materials lawfully according to Laws and Regulations:
   1. Comply with requirements in NFPA 241, Standard for Safeguarding Construction, Alteration and Demolition Operations, for removal of combustible waste materials and debris.
   2. Do not hold other materials more than three days if the temperature is expected to rise above 80° F.
   3. Provide suitable containers for storage of waste materials and debris.
   4. Containerize hazardous and unsanitary waste materials separately from other waste. Mark containers appropriately.

B. Project:
   1. Maintain Project free of waste materials and debris.
   2. Keep exterior dust generating areas wetted down.

C. Work Areas: Clean areas where Work is in progress to the level of cleanliness necessary for proper execution of the Work.
   1. Remove liquid spills promptly and report spills to the OWNER and ENGINEER immediately.
   2. Where dust would impair proper execution of the Work, broom-clean or vacuum the entire Work area, as appropriate.

D. Installed Work: Keep installed Work clean. Clean installed surfaces according to written instructions of manufacturer or fabricator of product installed, using only cleaning materials specifically recommended. If specific cleaning materials are not recommended, use cleaning materials that are not hazardous to health or property and that will not damage exposed surfaces.

E. Concealed Spaces: Remove all debris from concealed spaces before enclosing the space.

F. Exposed Surfaces: Clean exposed surfaces and protect as necessary to ensure freedom from damage and deterioration at time of Substantial Completion.

G. Cutting and Patching: Clean areas and spaces where cutting and patching are performed. Completely remove paint, mortar, oils, putty, and similar materials.
   1. Thoroughly clean piping, conduit, and similar features before applying paint or other finishing materials. Restore damaged pipe covering to its original condition.

H. Waste Disposal:
   1. Properly dispose of all waste materials, surplus materials, debris and rubbish off the Project site.
   2. Do not burn or bury rubbish and waste materials on the Project site.
   3. Do not dispose of volatile or hazardous wastes such as mineral spirits, oil, or paint thinner in storm or sanitary drains.
   4. Do not discharge wastes into streams or waterways.
   5. Sole responsibility for complying with any federal, state, and local environmental and regulations in disposing of waste, belongs to CONTRACTOR.

I. During handling and installation, clean and protect construction in progress and adjoining materials already in place. Apply protective covering where required to ensure protection from damage or deterioration at Substantial Completion.

J. Clean and provide maintenance on completed construction as frequently as necessary through the remainder of the construction period. Adjust and lubricate operable components to ensure operability without damaging effects.

## 1.4 FINAL CLEANING

A. General: Provide final cleaning.
   1. Complete the following cleaning and waste-removal operations before requesting inspection for certification of Substantial Completion for entire Project or for a portion of Project:
      a. Clean and remove from the Project rubbish, waste material, debris, and other foreign substances.
      b. Repair pavement, roads, sod, and all other areas affected by construction operations and restore them to original condition or to minimum condition specified.
      c. Clean exposed exterior and interior hard-surfaced finishes to a dirt-free condition, free of spatter, grease, stains, fingerprints, films, and similar foreign substances.
      d. Remove tags and labels that are not permanent.
      e. Touch up and otherwise repair and restore chipped, scratched, dented or otherwise marred surfaces to specified finish and match adjacent surfaces.
         1) Do not paint over “UL” or similar labels, including manufacturer mechanical and electrical nameplates.
      f. Wipe surfaces of mechanical and electrical equipment, and similar equipment. Remove excess lubrication, paint and mortar droppings, and other foreign substances.
      g. Maintain the cleaning until OWNER occupies the Project or portion thereof.
      h. Leave Project clean and in a neat and orderly condition satisfactory to ENGINEER.

## PART 2 - PRODUCTS (NOT USED)

## PART 3 - EXECUTION (NOT USED)

+ + END OF SECTION + +

# SECTION 01781

# OPERATIONS AND MAINTENANCE DATA

## PART 1 - GENERAL

### 1.1 DESCRIPTION

A. Provide Operation and Maintenance Data in the form of instructional manuals for use by the OWNER'S personnel for:
   1. All equipment and systems.
   2. All valves, gates and related accessories.
   3. All instruments and control devices.
   4. All electrical gear.

B. Training or start-up on any system, process, or piece of equipment shall **not** be allowed until Operation and Maintenance Manuals are reviewed by the ENGINEER and the Operation and Maintenance Manuals have been turned over and approved by OWNER as per 1.1.D.3.

C. Definitions:
   1. Operation and Maintenance Data:
      a. The term "Operation and Maintenance Data" includes all product related information and documents which are required for preparation of the plant operation and maintenance manual. It also includes all data which shall accompany said manual as directed by current regulations of any participating government agency.
      b. Required Operation and Maintenance Data includes, but is not limited to, the following:
         1) A copy of the specification section in which the Operations and Maintenance Manual applies.
         2) Complete, detailed written operating instructions for each product or piece of equipment including equipment function; operating characteristics; limiting conditions; operating instructions for startup, normal and emergency conditions; regulation and control; and shutdown.
         3) Complete, detailed written preventive maintenance instructions as defined below.
         4) Recommended spare parts lists, by generic title and identification number, and local sources of supply for parts.
         5) Written explanations of all safety considerations relating to operation and maintenance procedures, including Material Safety Data Sheets (M.S.D.S.'s).
         6) Provide the completed Equipment Manufacturer/Vendor/Installer Form. Form to include: name, address, phone number, fax number,

e-mail address, and website of manufacturer, manufacturer's local service representative (at a minimum), and subcontractor or installer. If multiple manufacturers of equipment are provided in a single manual, provide a separate form for each.

7) Copy of warranty bond and service contract, as applicable.
8) As-built circuit diagrams, wiring diagrams, schematics and functional drawings, as applicable, and either a nameplate drawing or a copy of nameplate.
9) Control Panel Drawings are to be provided in hard copy and electronically in AutoCAD version 2004 or newer.
10) Final test data, where applicable, shall be submitted as an appendix when completed.
11) Disassembly, reassembly, installation, alignment, adjustment, and checking instructions.
12) Provide installation data.
13) Provide the completed Equipment Information Forms, in accordance with the requirements of Section 01600, General Equipment Provisions. Form is located in Section 01331 – Reference Forms, form number 01600-A. If multiple manufacturers of equipment are provided in a single manual, provide a separate data sheet for each.
14) Provide a completed O&M Manual Review – Form is located in Section 01331 – Reference Forms, form number 01781-B – Operations & Maintenance Data Review Check List.
15) Material Safety Data Sheets (M.S.D.S.'s) for all fluids, oils, chemicals, and volume of each liquid used by each piece of equipment being supplied.

2. Preventive Maintenance Instructions:
   a. The term "preventive maintenance instructions" includes all information and instructions required to keep a product or piece of equipment properly lubricated, adjusted and maintained so that the item functions economically throughout its full design life.
   b. Preventive maintenance instructions include, but are not limited to, the following:
      1) A written explanation with illustrations for each preventive maintenance task.
      2) Recommended schedule for execution of preventive maintenance tasks.
      3) Lubrication charts.
      4) Table of alternative lubricants.
      5) Trouble shooting instructions.
      6) List of required maintenance tools and equipment.
      7) Special tools.

D. Submittals:
   1. General:
      a. Submit operations and maintenance data to the ENGINEER within 30

days after approval of Shop Drawings, unless noted otherwise.

b. Final approval of all O&M Manuals will only be provided after the OWNER has reviewed and approved the individual final O&M Manuals.

A copy of the signed Final Approval checklist shall be included in the O&M Manuals provided to the OWNER.

2. Preliminary Copies:

a. Number of preliminary copies: four (4) hard copy(s) and one (1) electronic copy(s) of each O&M Manual shall be submitted to the ENGINEER for review. The O&M Manual shall conform to the requirements as specified herein.

b. Each preliminary O&M Manual must be submitted to and reviewed by ENGINEER, and approved by the OWNER 30 days prior to equipment start-up. ENGINEER to determine timeline for the submittal review process.

3. Final Copies:

a. Number of Final Copies: 6 hard copy(s) and 1 electronic copy(s) of each manual.

b. 14 days prior to placing the equipment into service submit all final hard copies and soft copies of the approved O&M Manual (except for field test data) to the ENGINEER.

c. Electronic copy shall be on a CD, “pdf” format – including “character recognition”, and shall include all information provided in hard copy. The pdf file shall be a complete electronic copy of the hardcopy with bookmarks set for each tab in the hardcopy. The size of the pdf file shall be limited to 50 Mb and labeled with the title of the manual and volume number. Volumes shall be organized in a rational manner with the separation at a bookmark tab. CD’s must be properly labeled with the following: Facility Name, Project Title, WS number, Specification Section # and Title of Manual. Labels must be computer generated. Hand written labels are not acceptable.

4. Format Requirements:

a. Use 8-1/2-inch by 11-inch quality paper of a minimum 20 pound. Larger drawings or illustrations are acceptable if neatly folded to the size of 8-1/2-inch by 11-inch and each drawing or illustration placed inside of an individual clear plastic or vinyl sheet protector.

b. All text must be legible typewritten or machine printed originals or high quality copies of same. Manuals that contain copies that are not clear, not completely legible, off-center, skewed, or where text or drawings are cut by the binding holes shall be subject to disapproval. Pages that contain approval or date stamps, comments or other markings that cover any portion of text or drawing are unacceptable. Electronically transmitted facsimile (fax) copies are also unacceptable.

c. Each page shall have a binding margin of approximately 1-1/2-inches and be punched for placement in a “D-ring” loose-leaf binder. Provide minimum 1-inch size or larger, white in color, D-ring binders. Binders shall not be filled to more than 3/4 maximum of their capacity. Non-

uniform binders will not be acceptable. Identify each binder with the following:

1) Title "OPERATING AND MAINTENANCE INSTRUCTIONS".
2) Title of Project.
3) Specification Section Number and Title.
4) Name of the Provider of the Manual.
5) WSD WS#

d. Coordinate with the ENGINEER and OWNER to develop a comprehensive, practical, and consistent indexing system for the Operations and Maintenance Manuals. The ENGINEER and the OWNER shall review the indexing system before any manuals are submitted in draft form.

e. Use dividers and indexed tabs between major categories of information such as operating instructions, preventive maintenance instructions, or other. When necessary, place each major category in a separate binder.

f. Provide a Table of Contents for each binder. The Table of Contents will have an appendix place holder for the final Test Data Forms. The soft copy content shall be identical to the hard copy's Table of Contents.

g. Identify products by their functional names in the table of contents and at least once in each chapter or Section. Thereafter, abbreviations and acronyms may be used if their meaning is explained in a table in the back of each binder. Use of model or catalog numbers or letters for identification is not acceptable.

h. Indicate all components of the equipment on catalog pages by highlighting or some other clearly definable medium for ease of identification.

5. Changes after Installation:

a. Final test data, changes and/or upgrades made to the systems after initial installation and during the start-up and commissioning phases, including equipment information and as-built wiring schematics, shall be submitted as an appendix to the Operations and Maintenance Manuals.

## 1.2 OPERATIONS AND MAINTENANCE TRANSMITTAL FORM

A. Upon receipt of the Vendor Operations & Maintenance Manual from the Manufacturer /Supplier, complete the CONTRACTOR review and submit the Operations and Maintenance Transmittal Form as specified in Section 01331, Form 01781-A to the ENGINEER. ENGINEER to complete the form and attach to the Manual when delivered to the OWNER.

## PART 2 - PRODUCTS (NOT USED)

## PART 3 - EXECUTION (NOT USED)

+ + END OF SECTION + +

# SECTION 01782

# RECORD DOCUMENTS

## PART 1 - GENERAL

### 1.1 DESCRIPTION

A. Maintain and provide the ENGINEER with Record Documents as specified below, except where otherwise specified or modified in Division 2, Site Work, through Division 16, Electrical.

B. Definitions
   1. Contract Documents: The contract documents include the drawings, specifications, and addenda developed and furnished to the CONTRACTOR at the beginning of construction.
   2. As-Built Drawings: As-built drawings are an annotated set of drawings prepared by the CONTRACTOR. They show, in red, as-constructed changes to the original Contract Documents that have been made during the construction process. The As-Built Drawings may include supplemental drawings to provide the necessary detail, comply with project standards or where annotation would otherwise be impractical.
   3. Record Drawings: Record Drawings are prepared by the ENGINEER and reflect as-constructed changes that the CONTRACTOR annotated in the As-Built Drawings.
   4. Record Documents: The Record Documents include Record Drawings, specifications, addenda, approved shop drawings, samples, photographs, change orders, other modifications to the Contract Documents, test records, survey data, field orders, Request for Information, submittals and all other documents pertinent to the CONTRACTOR'S Work.

C. Maintenance of Documents:
   1. Up to five (5) sets of black line sets of plans, including any Addenda, of the Drawings will be furnished to CONTRACTOR by the OWNER.
   2. Maintain in CONTRACTOR'S field office in clean, dry, legible condition complete sets of the following: Drawings, Specifications, Addenda, approved Shop Drawings, Samples, Photographs, Change Orders, other modifications of Contract Documents, test records, survey data, Field Orders, and all other documents pertinent to CONTRACTOR'S Work.
   3. Provide files and racks for proper storage and easy access. File in accordance with filing format of Construction Specification Institute (CSI), unless otherwise approved by ENGINEER.
   4. Make documents available at all times for inspection by ENGINEER and OWNER.
   5. Record Documents shall not be used for any other purpose and shall not be

removed from CONTRACTOR'S office without ENGINEER'S approval.

6. Any contractually required testing provided by others shall be thoroughly documented by the CONTRACTOR and maintained with the project Record Documents. All testing results shall be maintained in their own separate log for the project; being kept current weekly and made readily available for viewing at any time.

D. Marking System: Changes, revisions, additions and deletions, to the record set of Drawings shall be marked in Red.

E. Recording:
1. Submit as-built drawings and make a record of the locations of all work completed as part of the project. The as-builts must indicate the locations of the beginning(s) and end(s), Station and Offsets of the construction, and all valves, fire hydrants, pipe fittings, service connections and appurtenances. They must also show locations and elevations where significant elevation changes occur or changes in direction in all pipe alignments. Their locations must be shown by stationing and dimensioning from appropriate monument lines or in their absence appropriate lot lines, property lines or easement line references.
2. Label the Cover Sheet, Index and each supplemental sheets of each document "AS-BUILTS" in printed letters in the upper right area of each sheet.
3. Keep the As-Built Drawings current. CONTRACTOR'S refusal, failure or neglect to maintain current As-Built Drawings shall constitute sufficient basis for the ENGINEER to recommend the withholding of some or all of any payment due.
4. Do not permanently conceal any Work until required information has been recorded.
5. Drawings: Legibly mark to record actual construction clearly shown by striking through original information with a single line and write new information followed by "AB" lettering including:
   a. Depths of various elements of foundation in relation to datum.
   b. Horizontal and vertical location of underground utilities and appurtenances referenced to permanent surface improvements.
   c. Location of internal utilities and appurtenances concealed in construction referenced to visible and accessible features of structure.
   d. Field changes of dimensions and details.
   e. Changes made by Change Order or Field Order (include marked changes with reference to change order).
   f. Details not on original Drawings.
6. Specifications and Addenda: Legibly mark up each Section to record:
   a. Manufacturer, trade name, catalog number, and supplier of each product and item of equipment actually installed.
   b. Changes made by Change Order or Field Order.
   c. Other matters not originally specified.
7. Deletions or portions of work not constructed shall clearly be marked with an

"X" thru the deletion in both plan and profile views.

F. Record Drawings:

1. As-Build Drawings shall be prepared for all the Work included in the Contract. On a weekly basis, make available to the ENGINEER a full size annotated copy of the As-Built Drawings that include changes from the previous week's As-Built Drawing submittal. Annotations shall include redlined "clouds" of only those changes from the previous week's submittal. The redlined As-Built Drawings shall show the actual in-place installation of the items installed under this Contract. The redlined As-Built Drawings shall show the Work in plan and sections as required for clarity with reference dimensions and elevations that will be used to develop complete Record Drawings, including invert elevations, rim elevations, pipe slopes, pipe lengths, stationing, dimensions, quantities, etc.
2. Develop and furnish to the ENGINEER, redlined Instrumentation and Control and Electrical Drawings showing one line diagrams with all conduit and wire sizes shown of the distribution systems and the actual in-place grounding system, lighting arrangement, motor control centers, corrected wiring diagrams, equipment and conduit and cable plans.
   a. The Contract Drawings may be used as a starting point in developing these Instrumentation and Control and Electrical As-Built Drawings. Subcontractor and manufacturer drawings may be included in this drawing package. The drawing package must be fully integrated and include the necessary cross references between drawings. The drawing package shall include interconnection and termination details to equipment furnished under this Contract.
   b. All As-Built Drawings must be made available on a weekly basis for approval of the ENGINEER. This shall include the following composite drawings for the system being furnished:
      1) Schematic (Elementary) Diagrams: This shall include, but not be limited to, complete schematics including items furnished by others for the following:
         a) Motor Control Circuits for Starters furnished under this Contract.
         b) HVAC Control Panels furnished under this Contract.
      2) Wiring (Connection) Diagrams: These shall be included for all pre-wired equipment furnished under this Contract.
      3) Interconnection Diagrams: These shall include all interconnections to be furnished under this Contract.
      4) Conduit and Cable Schedules: These shall include all conduit and cable furnished under this Contract.
      5) Dimension of Outline Drawings: These shall include all equipment furnished under this Contract.
      6) Power and Lighting Layout Drawings: These shall include all conduits and wiring furnished under this Contract.
3. In addition to the redlined As-Built Drawings, prepare and submit CADD

".dwg" files, version 2004 or later, for all supplemental drawings used to complete the As-Built Drawings.

4. Survey results shall be posted to the as-builts on a weekly basis.

G. Submittals:

1. Acceptance of CONTRACTOR'S monthly application for payment shall be dependent on the ENGINEER'S acceptance and agreement that CONTRACTOR'S As-Built Drawings and weekly submittals are complete, thorough and acceptable in showing all Work up through and including such work as CONTRACTOR is claiming for completion and payment on CONTRACTOR'S application for payment. Any items which do not appear on the As-Built Drawings in complete and acceptable form shall not be paid for in CONTRACTOR'S monthly payment.
2. Examination by the ENGINEER of CONTRACTOR'S As-Built Drawings will be made on a weekly basis to determine completion for consideration of monthly pay application. Also, make available all As-Built Drawings at all times to the ENGINEER for examination.
3. Prior to Completion of the Work, deliver final As-Built Drawings to ENGINEER. Substantial completion will not be made until satisfactory final Registered Land Surveyor Signed and dated As-Built Drawings are received by ENGINEER.
4. Accompany monthly progress submittals:
   a. Date.
   b. Project title and number.
   c. CONTRACTOR'S name and address.
   d. Certification that As-Builts are complete and accurate.
   e. Signature of CONTRACTOR, or authorized representative.

PART 2 - PRODUCTS (NOT USED)

PART 3 -EXECUTION (NOT USED)

+ + END OF SECTION + +

# SECTION 01783

# SPARE PARTS AND MAINTENANCE MATERIALS

## PART 1 - GENERAL

### 1.1 DESCRIPTION

A. Submit a complete list of all spare parts required for the project for review and comments to the ENGINEER and OWNER by no later than 50 percent of the project construction completion. The list shall include details such as equipment identification, part description, manufacture, and manufacturer part number, location in system, local vendor, storage requirements, storage location, and approximate cost. This completed list will be used to inventory all parts at time of turn over to the OWNER.

B. Spare parts and materials required to be supplied in the Contract Documents shall be furnished in manufacturer's unopened cartons, boxes, crates or other protective covering suitable for preventing corrosion or deterioration for the maximum length of storage which may be normally anticipated. They shall be clearly marked and identified as to the name of manufacturer or supplier, applicable equipment, part number, description and location in the equipment. All parts shall be protected and packaged for a shelf life of at least ten years.

C. During construction, store parts in buildings or trailers with floor, roof and closed sides and in accordance with manufacturers' recommendations. Protect from weather, condensation and humidity.

D. Parts and materials shall be delivered to the OWNER upon Substantial Completion of the Work or during the commissioning period of the system. Until that occurs, place spare parts in permanent storage rooms or areas approved by the OWNER. The turnover procedures shall be developed by the ENGINEER.

E. Full responsibility for loss or damage to parts and materials until they are transmitted to the OWNER, belongs to CONTRACTOR.

## PART 2 - PRODUCTS (NOT USED)

## PART 3 - EXECUTION (NOT USED)

+ + END OF SECTION + +

# SECTION 01784

# WARRANTY INSPECTION

## PART 1 - GENERAL

### 1.1 DESCRIPTION

A. Approximately ten (10) months after final completion, ENGINEER will make arrangements with OWNER and CONTRACTOR for a Warranty Inspection and will send a written notice to OWNER and CONTRACTOR advising of the date and time of the inspection.

B. After the inspection, ENGINEER will inform CONTRACTOR of any corrections required.

## PART 2 - PRODUCTS (NOT USED)

## PART 3 - EXECUTION (NOT USED)

+ + END OF SECTION + +

# SECTION 02315

# STRUCTURAL EXCAVATION AND BACKFILL

## PART 1 - GENERAL

### 1.1 DESCRIPTION

A. Scope:
   1. Provide all labor, materials, equipment and incidentals required to perform all excavating, backfilling, filling and grading, and disposing of earth materials as shown on the Drawings, specified, and required for construction of retaining walls, manholes, vaults, structure foundations, underground ductbanks, electrical manholes and handholes, and other structures and facilities required to complete the Work in every respect.
   2. All necessary preparation of subgrade for slabs, foundations and pavements is included.
   3. All temporary means required to prevent discharge of sediment to water courses from dewatering systems or erosion are included.
   4. No classification of excavated materials will be made. Excavation includes all materials regardless of type, character, composition, moisture, or condition thereof, except rock.
   4. On-site excavated material will be classified for use as backfill material. Excavation materials include all materials regardless of type, character, composition, moisture, or condition thereof.
   5. Perform all earthwork as specified in this Section.

### 1.2 QUALITY ASSURANCE

A. Testing Services:
   1. General: Testing of materials, testing for moisture content during placement and compaction of fill materials, and of compaction requirements for compliance with technical requirements of the Specifications shall be performed by a testing laboratory as designated in Section 01452, Testing Laboratory Services Furnished by CONTRACTOR.
   2. Responsibilities and Duties of CONTRACTOR:
      a. The use of testing services shall in no way relieve CONTRACTOR of the responsibility to furnish materials and construction in full compliance with the Contract Documents.
      b. To facilitate testing services:
         1) Secure and deliver to the ENGINEER or to the testing agency, without cost, preliminary representative samples of the materials he proposes to use and which are required to be tested.

2) Furnish such casual labor as is necessary to obtain and handle samples at the Work site or at other sources of material.
3) Advise the OWNER'S testing agency at least two days in advance of any backfill operations to allow for completion of quality tests and for the assignment of personnel.

c. CONTRACTOR'S Testing Service shall inspect and approve subgrades and fill layers before further construction Work is performed thereon.

d. Responsibility belongs to CONTRACTOR to accomplish the specified compaction for backfill, fill, and other earthwork, and to control his operations by confirmation tests to verify and confirm that CONTRACTOR has complied, and is complying at all times, with the requirements of these Specifications concerning compaction, control, and testing.

e. The frequency of CONTRACTOR'S confirmation tests shall be not less than as follows; each test location for trenches shall include tests for each layer, type, or class of backfill from bedding to finish grade.
1) Trenches for structures, and underground ductbanks:
a) In open fields: Two locations every 1,000 linear feet.
b) Along dirt or gravel roads or off traveled right-of-way: Two locations every 500 linear feet.
c) Crossing paved roads: Two locations along each crossing.
d) Under pavement cuts or within two feet of pavement edges: One location every 400 linear feet.
2) For structural backfill: On 30-foot intervals on all sides of the structure for every compacted lift but no less than one per lift on each side of the structure for structures less than 60 feet long on a side.
3) In embankment or fill: One per 1000 square feet on every compacted lift.
4) Base material: One per 1000 square feet on every compacted lift.
5) Footing Subgrade: For each strata of soil on which footings will be placed, conduct at least one test to verify required design bearing capacities. Subsequent verification and approval of each footing subgrade may be based on a visual comparison of each subgrade with related tested strata, when acceptable to ENGINEER.
6) Paved Areas and Building Slab Subgrade: Make at least one field density test of subgrade for every 500 square feet of paved area or building slab, but in no case less than three tests. In each compacted fill layer, make one field density test for every 1000 square feet of overlaying building slab or paved area, but in no case less than three tests.
7) Foundation Wall Backfill: Take at least two field density tests, at locations and elevations as directed by the ENGINEER.

f. Copies of the test reports shall be submitted promptly to the ENGINEER. CONTRACTOR'S tests to be performed by a soils testing laboratory acceptable to the ENGINEER.

g. Demonstrate the adequacy of compaction equipment and procedures before exceeding any of the following amounts of earthwork quantities:
   1) 200 linear feet of trench backfill.
   2) 10 cubic yards of structural backfill.
   3) 100 cubic yards of embankment work.
   4) 50 cubic yards of base material.
h. Until the specified degree of compaction on the previously specified amounts of earthwork is achieved, no additional earthwork of the same kind shall be performed.
i. Periodic compliance tests will be made by the ENGINEER to verify that compaction is conforming to the requirements previously specified, at no cost to CONTRACTOR. Remove the overburden above the level at which the ENGINEER wishes to test and shall backfill and recompact the excavation after the test is complete.
j. If compaction fails to conform to the specified requirements, remove and replace the backfill at proper density or shall bring the density up to specified level by other means acceptable to the ENGINEER. Subsequent tests required to confirm and verify that the reconstructed backfill has been brought up to specified density shall be paid by CONTRACTOR. CONTRACTOR'S confirmation tests to be performed in a manner acceptable to the ENGINEER. Frequency of confirmation tests for remedial Work shall be double that amount specified for initial confirmation tests.

B. Permits and Regulations:
   1. Obtain all necessary permits for Work in roads, rights-of-way, railroads, etc. Also, obtain permits as required by local, state and federal agencies for discharging water from excavations.
   2. Perform excavation Work in compliance with applicable requirements of governing authorities having jurisdiction.

C. Reference Standards: Comply with applicable provisions and recommendations of the following, except as otherwise shown or specified.
   1. ASTM A 36, Specification for Structural Steel.
   2. ASTM A 328, Specification for Steel Sheet Piling.
   3. ASTM D 422, Method for Particle-Size Analysis of Soils.
   4. ASTM D 427, Test Methods for Shrinkage Factors of Soils by the Mercury Method.
   5. ASTM D 698, Test Method for Laboratory Compaction Characteristics of Soil.
   6. ASTM D 1556, Test Method for Density and Unit Weight of Soil in Place by the Sand-Cone Method.
   7. ASTM D 2166, Test Method for Unconfined Compressive Strength Of Cohesive Soils.
   8. ASTM D 2922, Test Methods for Density of Soil and Soil-Aggregate in Place by Nuclear Methods (Shallow Depth).

9. ASTM D 4318, Test Method for Liquid Limit, Plastic Limit and Plasticity Index of Soils.
10. AISC Specifications for the Design, Fabrication, and Erection of Structural Steel for Buildings.
11. OSHA Standard, Title 29, Code of Federal Regulations, Part 1926, Section .650 (Subpart P - Excavations).
12. Uniform Standard Specifications for Public Work Construction by the Maricopa Association of Governments (MAG) as supplemented by the City of Chandler, Section 206, Structure Excavation and Backfill, Section 604, Placement of Controlled Low Strength Material, Section 702, Base Materials, Section 725, Portland Cement Concrete, Section 728, Controlled Low Strength Material. Where there is a conflict between MAG Standard Specifications as supplemented by the City of Chandler and this Specification, provisions of this Specification shall govern.

## 1.3 SUBMITTALS

A. Shop Drawings: Submit for approval the following:
   1. Excavation and Backfill Submittals:
      a. Excavation Plan: Prior to start of excavation operations, a written plan shall be submitted to demonstrate compliance with OSHA Standard 29 CFR Part 1926.650. As a minimum, excavation plan shall include:
         1) Name of competent person.
         2) Excavation method(s) or protective system(s) to be used.
         3) Copies of "manufacturer's data" or other tabulated data if protective system(s) are designed on the basis of such data.
      b. Excavation and backfill requirements detailing sheeting and bracing, or other protective system(s), dewatering systems, cofferdams, and underpinning.
      c. Shop Drawings shall be prepared by a Registered Professional Engineer, licensed in the State of Arizona, recognized as an expert in the specialty involved. Drawings shall be submitted to ENGINEER for record purposes only. Calculations shall not be submitted. Drawing submittals will not be checked and will not imply approval by ENGINEER of the Work involved. Sole responsibility for designing, installing, operating and maintaining whatever system is necessary to satisfactorily accomplish all necessary sheeting, bracing, protection, underpinning and dewatering belongs to CONTRACTOR.
      d. Samples of all materials, including select backfill, general backfill, crushed stone and sand shall be submitted to the ENGINEER and the testing service. Samples of the proposed material shall be submitted at least 14 days in advance of its anticipated use.
   2. Test Reports:
      a. Testing laboratory shall submit copies of the following reports directly to ENGINEER, with copy to CONTRACTOR:
         1) Tests on borrow material.

2) Tests on footing subgrade.
3) Field density tests.
4) Optimum moisture - maximum density curve for each soil used for backfill.
5) Tests of actual unconfined compressive strength or bearing tests of each strata.
6) Reports of observations for conformance of borrow material to the Project Geotechnical Report.

## 1.4 JOB CONDITIONS

A. Subsurface Information: Refer to General Conditions, and Supplementary Conditions, for available data on subsurface conditions. The data is not intended as a representation or warranty of continuity of conditions between soil borings nor of groundwater levels at dates and times other than date and time when measured. OWNER will not be responsible for interpretations or conclusions by CONTRACTOR. Data is solely made available for the convenience of CONTRACTOR.
   1. Additional test borings and other exploratory operations may be made by CONTRACTOR, at no additional cost to OWNER.

B. Existing Structures: The Drawings show certain surface and underground structures adjacent to the Work. This information has been obtained from existing records. It is not guaranteed to be correct or complete and is shown on the Drawings for the convenience of CONTRACTOR. Explore ahead of the required excavation to determine the exact location of all existing structures. Structures shall be supported and protected from damage by CONTRACTOR. If they are broken or damaged, restore them immediately, at no additional cost to the OWNER.

C. Existing Utilities: Locate existing underground utilities in the areas of the Work. If utilities are to remain in place, provide adequate means of protection during all operations.
   1. Should uncharted or incorrectly charted piping or other utilities be encountered during excavation, consult piping or utility owner and ENGINEER immediately for directions as to procedure. Cooperate with OWNER and utility owner in keeping services and facilities in operation. Repair damaged utilities to satisfaction of utility owner.

   2. Do not interrupt existing utilities serving facilities occupied and used by OWNER or others, except when permitted in writing by ENGINEER and then only after acceptable temporary utility services have been provided.
   3. Demolish and completely remove from site existing underground utilities indicated to be removed. Coordinate with utility companies for shut-off of services if lines are active.

D. Use of Explosives:

1. The use of explosives will not be permitted.

E. Protection of Persons and Property: Barricade open excavations occurring as part of the Work and post with warning lights. Operate warning lights during hours from dusk to dawn each day and as otherwise required.
   1. Protect structures, utilities, sidewalks, pavements, and other facilities from damage caused by settlement, lateral movement, undermining, washout and other hazards created by earthwork operations.

G. Roadways and Walks: Unless otherwise approved by ENGINEER, excavated material and materials of construction shall be so deposited, and the Work shall be so conducted, as to leave open and free for pedestrian traffic all crosswalks, and for vehicular traffic a roadway not less than ten feet in width. All hydrants, valves, fire alarm boxes, letter boxes, and other facilities which may require access during construction shall be kept accessible for use. During the progress of the Work, maintain such crosswalks, sidewalks, and roadways in satisfactory condition and the Work shall at all times be so conducted as to cause a minimum of inconvenience to public travel, and to permit safe and convenient access to private and public property along the line of the Work.

## PART 2 - PRODUCTS

### 2.1 SOIL MATERIALS

A. Backfill and Fill Materials:
   1. Materials acceptable for use as backfill against walls, foundations, underground ductbanks, and other structures shall be stockpiled native sandy clay or granular soils obtained from on-site excavations and which are uniformly mixed, contain no organic matter, nor contain rocks or fragments greater than 4-inches in size, nor have greater than 40 percent passing the 200 sieve. The maximum expansion of on-site materials shall be 1.5 percent as performed on a sample remolded to approximately 95 percent of the maximum dry density as determined in accordance with ASTM D 698 at two percent below optimum moisture content under a 100 psf surcharge pressure.
   2. Backfill and fill materials from off-site sources shall consist of silty or clayey sand soils which are uniformly mixed, contain no organic matter and which have a Plasticity Index less than ten. The maximum particle size of imported soils shall be 4-inches or less, if required to satisfy trenching, landscaping, or other requirements. The maximum expansion of off-site materials shall be 1.5 percent as performed on a sample remolded to approximately 95 percent of the maximum dry density as determined in accordance with ASTM D 698 at two percent below optimum moisture content under a 100 psf surcharge pressure.
   3. All materials for use as backfill and fill material shall be tested by the laboratory and approved by the ENGINEER.

4. If on-site material is unsuitable as determined by the ENGINEER, select backfill or approved off-site fill shall be used.
5. Fill adjacent to structures is classified as backfill to a distance measured horizontally from the structure that is equal to the depth from the finished grade. Outside these limits the fill is classified as embankments, unless otherwise specified.

B. Select Backfill: Select Backfill for use beneath concrete slabs and asphaltic pavements shall be crushed aggregate conforming to the requirements below:

| Sieve Sizes (Square Openings) | Percentage by Weight Passing Sieve |
|---|---|
| 1-1/4-inch | 100 |
| No. 4 | 38 to 65 |
| No. 8 | 25 to 60 |
| No. 30 | 10 to 40 |
| No. 200 | 3 to 12 |

C. Fill Material for Embankments:
1. Fill materials for use as embankments, and as miscellaneous landscaping materials exterior to plant facilities, shall consist of soils obtained from on-site excavations or off-site sources that are uniformly mixed, contain no organic material, rocks or fragments greater than 3-inches in size.
2. All materials for use as described above shall be tested by the laboratory and approved by the ENGINEER.

D. General Backfill and Fill Materials: Provide approved soil materials for backfill and fill, free of clay, rock or gravel larger than 6-inches in any dimension, debris, waste, frozen materials, vegetable and other organic matter and other deleterious materials. Previously excavated materials meeting these requirements may be used for backfill.

## PART 3 -EXECUTION

### 3.1 INSPECTION

A. Provide ENGINEER with sufficient notice and with means to examine the areas and conditions under which excavating, filling, and grading are to be performed. The CONTRACTOR to call for a final inspection by the ENGINEER of all components to be buried and comply with the inspection recommendations. ENGINEER will notify CONTRACTOR if conditions are found that may be detrimental to the proper and timely completion of the Work. Do not proceed with the Work until unsatisfactory conditions have been corrected in an acceptable manner.

### 3.2 SITE PREPARATION

A. Clear all areas to be occupied by permanent construction or embankments of all trees, brush, roots, stumps, logs, wood and other materials and debris. Clean and strip subgrades for fills and embankments of vegetation, sod, topsoil and organic matter. All waste materials shall be removed from site and properly disposed of by CONTRACTOR. Burning is not be permitted.

## 3.3 EXCAVATION

A. Perform all excavation required to complete the Work as shown on the Drawings, specified and required. Excavations shall include earth, sand, clay, gravel, hardpan, boulders not requiring drilling and blasting for removal, decomposed rock, pavements, rubbish and all other materials within the excavation limits, except rock.

B. Excavations for structures and underground ductbanks shall be open excavations. Provide excavation protection system(s) required by ordinances, codes, law and regulations to prevent injury to workmen and to prevent damage to new and existing structures or pipelines. Unless shown on the Drawings or specified otherwise, protection system(s) shall be utilized under the following conditions.
   1. Excavation Less Than Five Feet Deep: Excavations in stable rock or in soil conditions where there is no potential for a cave-in may be made with vertical sides. Under all other conditions, excavations shall be sloped and benched, shielded, or shored and braced.
   2. Excavations More Than Five Feet Deep: Excavations in stable rock where there is no potential for a cave-in may be made with vertical sides. Under all other conditions, excavations shall be sloped and benched, shielded or shored and braced.
   3. Excavation protection system(s) shall be installed and maintained in accordance with drawings submitted under Article 1.3, above.

C. Where the structure or ductbank is to be placed below the ground water table, well points, cofferdams or other acceptable methods shall be used to permit construction of said structure under dry conditions. Dry conditions shall prevail until concrete has reached sufficient strength to withstand earth and hydrostatic loads. In addition, protect excavation from flooding until all walls and floor framing up to and including grade level floors are in place and backfilling has begun. Water level shall be maintained below top of backfill at all times.

D. Pumping of water from excavations shall be done in such a manner to prevent the carrying away of unsolidified concrete materials, and to prevent damage to the existing subgrade.

E. The elevation of the bottom of footings shown on the Drawings shall be considered as approximate only and ENGINEER may order such changes in dimensions and elevations as may be required to secure a satisfactory footing. All structure excavations shall be hand-trimmed to permit the placing of full widths, and lengths of footings on horizontal beds. Rounded and undercut edges will not be permitted.

F. When excavations are made below the required grades, without the written order of ENGINEER, they shall be backfilled with select backfill material, as directed by ENGINEER, at the expense of CONTRACTOR.

G. Excavations shall be extended sufficiently on each side of structures, footings, etc., to permit setting of forms, installation of shoring or bracing or the safe sloping of banks.

H. Subgrades for roadways and structures shall be firm, dense, and thoroughly compacted and consolidated; shall be free from mud, muck, and other soft or unsuitable materials; and shall remain firm and intact under all construction operations. Subgrades which are otherwise solid, but which become soft or mucky on top due to construction operations, shall be reinforced with select backfill material. The finished elevation of stabilized subgrades shall not be above subgrade elevations shown on the Drawings. Proof roll all subgrades prior to placing of select fill and general fill material.

I. Material Storage: Stockpile satisfactory excavated materials in approved areas, until required for backfill or fill. Place, grade and shape stockpiles for proper drainage.
   1. Locate and retain soil materials away from edge of excavations.
   2. Dispose of excess soil material and waste materials as specified hereinafter.
   3. Stockpiled excavated soils for use as subsequent fill shall be classified by laboratory as on-site granular or sandy clay soils. Use and placement of fill shall be performed as specified for each class.
   4. Excess soil from excavations shall be disposed of off-site. Disposal shall be in accordance with state and local regulatory requirements.

J. Where ENGINEER considers the existing material beneath the bedding material unsuitable, CONTRACTOR remove same and replace it with select backfill.

## 3.4 UNAUTHORIZED EXCAVATION

A. All excavation outside the lines and grades shown on the Drawings, and which is not approved by ENGINEER, together with the removal and disposal of the associated material shall be at CONTRACTOR'S expense. Unauthorized excavations shall be filled and compacted with select backfill by CONTRACTOR at his expense.

## 3.5 DRAINAGE, EROSION CONTROL AND DEWATERING

A. Erosion Control:
   1. In general, the construction procedures outlined herein shall be implemented to assure minimum damage to the environment during construction. Take any and all additional measures required to conform to the requirements of applicable codes and regulations, and the requirements specified in Section 01412, Stormwater Pollution Prevention Plan and Permit.

2. Whenever possible, access and temporary roads shall be located and constructed to avoid environmental damage. Provisions shall be made to regulate drainage, avoid erosion and minimize damage to vegetation.
3. Where areas must be cleared for storage of materials or temporary structures, provisions shall be made for regulating drainage and controlling erosion, subject to the ENGINEER'S approval.
4. Temporary measures shall be applied to control erosion and to minimize the silting of the existing waterways, and natural ponding areas. Such measures shall include, but are not limited to, the use of berms, baled straw silt barriers, gravel or crushed stone, mulch, slope drains and other methods. These temporary measures shall be applied to erodible materials exposed by any activities associated with the construction of this Work.
   a. Special care shall be taken to eliminate depressions that could serve as mosquito pools.
   b. Temporary measures shall be coordinated with the construction of permanent drainage facilities and other Work to the extent practicable to assure economical, effective, and continuous erosion and silt control.
   c. Provide special care in areas with steep slopes. Disturbance of vegetation shall be kept to a minimum to maintain stability.
5. Remove only those shrubs and grasses that must be removed for construction. Protect the remainder to preserve their erosion-control value.
6. Install erosion and sediment control practices where shown on the Drawings and according to applicable standards, codes and specifications. The practices shall be maintained in effective working condition during construction and until the drainage area has been permanently stabilized.
7. Mulching to be used for temporary stabilization.
   a. Suitable Materials for Mulching:
      1) Unrotted straw or salt hay: 1-1/2 to 2 tons/acre.
      2) Asphalt emulsion or cutback asphalt: 600 to 1200 gal. /acre.
      3) Wood-fiber or paper-fiber (hydroseeding): 1500 lbs./ acre.
      4) Mulch netting (paper, jute, excelsior, cotton or plastic).
   b. Straw or salt hay mulches should be immediately anchored using peg and twine netting or a mulch anchoring tool or liquid mulch binders.
8. After stabilization, remove all straw bale dikes, debris, etc., from the site.
9. In the event of any temporary Work stoppage, take steps any temporary or environmental damage to the area undergoing construction.
10. In the event CONTRACTOR repeatedly fails to satisfactorily control erosion and siltation, the OWNER reserves the right to employ outside assistance or to use its own forces to provide the corrective measures indicated. The cost of such work, plus engineering costs, will be deducted from monies due CONTRACTOR.
11. Prevent blowing and movement of dust from exposed soil surfaces and access roads to reduce on and off-site damage and health hazards. Control may be achieved by irrigation in which the site shall be sprinkled with water until the surface is moist. The process shall be repeated as needed.

B. Drainage and Dewatering:

1. Provide and maintain adequate drainage and dewatering equipment to remove and dispose of all surface water and ground water entering excavations, or other parts of the Work. Each excavation shall be kept dry during subgrade preparation and continually thereafter until the structure to be built, therein is inspected by the ENGINEER and backfill operations have been completed and approved.
   a. The different working areas on the site shall be kept free of surface water at all times. Install drainage ditches and dikes and shall perform all pumping and other Work necessary to divert or remove rainfall and all other accumulations of surface water from the excavations and fill areas. The diversion and removal of surface water shall be performed in a manner that will prevent the accumulation of water behind temporary structures or at any other locations within the construction area where it may be detrimental.
   b. Water used for working or processing, resulting from dewatering operations, or containing oils or sediments that will reduce the quality of the water downstream of the point of discharge, shall not be directly discharged. Such waters shall be diverted through a settling basin or filter before being discharged.
   c. Responsibility belongs to CONTRACTOR for the condition of any pipe, conduit or channel used for drainage purposes and all such pipes, conduits or channels shall be left clean and free of sediment.
   d. Remove water from excavations as fast as it collects.
2. Provide, install and operate sufficient trenches, sumps, pumps, hose, piping, well points, deep wells, etc., necessary to depress and maintain the ground water level below the base of the excavations during all stages of construction operations. The ground water table shall be lowered in advance of excavation, for a sufficient period of time so as to permit dewatering of fine grain soils, and maintained two feet below the lowest subgrade excavation made until the structure has sufficient strength and weight to withstand horizontal and vertical soil and water pressures from natural ground water. The system shall be operated on a 24-hour basis and standby pumping facilities and personnel shall be provided to maintain the continued effectiveness of the system. If, in the opinion of the ENGINEER, the water levels are not being lowered or maintained as required by these Specifications, install additional or alternate dewatering devices as necessary, at no additional cost to the OWNER.
   a. Elements of the system shall be located so as to allow a continuous dewatering operation without interfering with the construction of the permanent Work. Where portions of the dewatering system are located in the area of permanent construction, submit details of the methods he proposes to construct the permanent Work in this location for the approval of the ENGINEER. Controls of ground water shall continue until the permanent construction provides sufficient dead load to withstand the hydrostatic uplift of the normal ground water, until concrete has attained sufficient strength to withstand earth and hydrostatic loads, and until all

waterproofing Work has been completed. Dispose of all water removed from the excavation in such a manner so as not to endanger any portion of the Work under construction or completed. Convey water from the excavations in a closed conduit. Before discontinuing dewatering operations or permanently permitting the rise of the ground water level, computations shall be made to show that any structure affected by the water level rise is protected by backfill or other means to sustain uplift. Use a safety factor of 1.25 when making these computations.

b. Dewatering operations shall not be discontinued without the prior authorization of the ENGINEER.

c. Design of dewatering system, including both drawings and calculations, shall be performed by a Registered Professional Engineer in the State of Arizona and shall be employed by CONTRACTOR. Dewatering system shall be designed so as to avoid settlement or damage to existing structures and utilities.

C. Disposal of Water Removed by Dewatering System:

1. CONTRACTOR'S Dewatering System will discharge to constructed basins, in accordance with State and Federal regulations.
2. Dispose of all water removed from the excavation in such a manner as not to endanger public health, property, or any portion of the Work under construction or completed.
3. Dispose of water in such a manner as to cause no inconvenience to OWNER, ENGINEER, or others involved in Work about the site.
4. Convey water from the construction site in a closed conduit. Do not use trench excavations as temporary drainage ditches

## 3.6 SHEETING, SHORING AND BRACING FOR STRUCTURE EXCAVATIONS

A. General:

1. Used material shall be in good condition, not damaged or excessively pitted. All steel or wood sheeting designated to remain in place shall be new. New or used sheeting may be used for temporary work.
2. All timber used for breast boards (lagging) shall be new or used, meeting the requirements for Douglas Fir Dense Construction grade with a bending strength not less than 1500 psi or Southern Pine No. 2 Dense.
3. All steel work for sheeting, shoring, bracing, cofferdams etc., shall be designed in accordance with the provisions of the "Specifications for the Design, Fabrication and Erection of Structural Steel for Buildings", of the AISC except that field welding will be permitted.

4. Steel sheet piling shall be manufactured from steel conforming to ASTM A 328. Steel for soldier piles, wales and braces shall be new or used and shall conform to ASTM A 36.
5. Maintain shoring and bracing in excavations regardless of time period excavations will be open. Carry down shoring and bracing as excavation progresses.
6. Unless otherwise shown on the Drawings, specified, or ordered, all materials used for temporary construction shall be removed when Work is completed. Such removal shall be made in a manner not injurious to the structure or its appearance or to adjacent Work.
7. Provide permanent steel sheet piling or pressure creosoted timber sheet piling wherever subsequent removal of sheet piling might permit lateral movement of soil under adjacent structures. Cut off tops as required, but at least three feet below grade, and leave permanently in place.
8. The clearances and types of the temporary structures, insofar as they affect the character of the finished Work, and the design of sheeting to be left in place, will be subject to the approval of ENGINEER; but responsibility for the adequacy of all sheeting, shoring, bracing, coffer-damming, etc., belongs to CONTRACTOR.
9. Safe and satisfactory sheeting, shoring and bracing shall be the entire responsibility of CONTRACTOR.
10. All municipal, County, State and Federal ordinances, codes, regulations and laws shall be observed.

B. Removal of Sheeting and Bracing:
   1. Remove sheeting and bracing from excavations, unless otherwise directed in writing by ENGINEER. Removal shall be done so as to not cause injury to the Work. Removal shall be equal on both sides of excavation to ensure no unequal loads on pipe or structure.
   2. Defer removal of sheeting and bracing, where removal may cause soil to come into contact with concrete, until the following conditions are satisfied:
      a. Concrete has cured a minimum of seven days.
      b. Wall and floor framing up to and including grade level floors are in place.

## 3.7 TRENCH SHIELDS

A. Excavation of earth material below the bottom of a shield shall not exceed the limits established by ordinances, codes, laws and regulations.

B. When using a shield for the installation of structures, the bottom of the shield shall not extend below the top of the bedding for the structures.

C. When a shield is removed extreme care shall be taken to prevent damage to the structures or the disturbance of the bedding for structures. Structures that are disturbed shall be removed and reinstalled as specified.

## 3.8 PLACEMENT OF FILL AND BACKFILL

A. General:
   1. All select backfill and backfill required for structures, embankments, and ductbanks and required to provide the finished grades shown on the Drawings and as described herein shall be furnished, placed and compacted by CONTRACTOR. Refer to and comply with the requirements of Section 02318, Crushed Stone and Gravel.
   2. Backfill excavations as promptly as Work permits, but not until completion of the following:
      a. Acceptance by the ENGINEER of construction below finish grade, including dampproofing, waterproofing and perimeter insulation.
      b. Inspection, testing, approval, and recording of locations of underground ductbanks.
      c. Removal of concrete formwork.
      d. Removal of shoring and bracing, and backfilling of voids with satisfactory materials.
      e. Removal of trash and debris.
   3. Fill containing organic materials or other unacceptable material shall be removed and replaced with approved fill material as specified.

B. Placement of Select Backfill, Backfill and Fill:
   1. Select backfill shall be placed to the grades shown on the Drawings. The lift thickness and compaction moisture content range given herein are approximate. These values shall be finally determined from the laboratory test results on the fill materials. Testing requirements shall be as specified in Paragraph 3.8.E., below.
   2. All select backfill shall be placed in horizontal loose lifts, not exceeding 8-inches in thickness, and shall be mixed and spread in a manner assuring uniform lift thickness after placing. Each lift shall be compacted by not less than two complete coverages of the specified compactor. Select backfill shall be placed to the underside of all concrete slabs. The fill material shall extend a minimum of two feet outside the face of each structure and be 12-inches below finished grade on all structures. The maximum slope of select backfill to the subgrade shall be one vertical to one horizontal.
   3. Backfill and fill around and outside of structures and over select backfill shall be deposited in layers not to exceed 8-inches in uncompacted thickness and mechanically compacted, using platform type tampers. Compaction of structures backfilled by rolling will be permitted provided the desired compaction is obtained and damage to the structure is prevented. Compaction of select backfill and/or backfill by inundation with water will not be permitted. All materials shall be deposited as specified herein and as shown on the Drawings.
   4. The material shall be placed at a moisture content and density as specified under Paragraph 3.8.E., below. Provide equipment capable of adding measured amounts of water to the backfill and/or select backfill material to bring it to a

condition within the range of the required moisture content. Provide equipment capable of discing, aerating, and mixing the soil to ensure reasonable uniformity of moisture content throughout the fill material and to reduce the moisture content of the borrow material by air drying, if necessary. If the subgrade or lift of earth material must be moisture conditioned before compaction, the fill material shall be sufficiently mixed or worked on the subgrade to ensure a uniform moisture content throughout the lift of material to be compacted. Materials at moisture content in excess of the specified limit shall be dried by aeration or stockpiled for drying.

5. No backfill or fill material shall be placed when free water is standing on the surface of the area where the fill is to be placed. No compaction of fill will be permitted with free water on any portion of the fill to be compacted. No fill shall be placed or compacted in a frozen condition or on top of frozen material. Any fill containing organic materials or other unacceptable material previously described shall be removed and replaced with approved fill material prior to compaction.
6. Compaction shall be performed with equipment suitable for the type of fill material being placed. Select equipment that is capable of providing the minimum density required by these Specifications. Hand operated compacting equipment shall be used within a distance of ten feet from the wall of any completed below grade structure. Equipment shall be provided that is capable of compacting in restricted areas next to structures and around piping. The effectiveness of the equipment selected shall be tested at the commencement of compacted fill Work by construction of a small section of fill within the area where fill is to be placed. If tests on this section of fill show that the specified compaction is not obtained, increase the amount of coverages, decrease the lift thicknesses and/or obtain a different type of compactor.
7. Levels of backfill against concrete walls shall not differ by more than two feet on either side of walls, unless walls are adequately braced or all floor framing is in place up to and including grade level slabs. Particular care shall be taken to compact structure backfill, which will be beneath pipes, roads, or other surface construction or structures. In addition, wherever a trench passes through structure backfill, the structure backfill shall be placed and compacted to an elevation 12-inches above the top of the pipe before the trench is excavated. Compacted areas, in each case, shall be adequate to support the item to be constructed or placed thereon.
8. The compaction requirements specified are predicated on the use of normal materials and compaction equipment. In order to establish criteria for the placement of a controlled fill so that it will have compressibility and strength characteristics compatible with the proposed structural loadings, a series of laboratory compaction and/or compressive strength tests shall be performed on the samples of materials submitted by CONTRACTOR. From the results of the laboratory tests, the final values of the required percent compaction, the acceptable compaction moisture content range, and the maximum permissible lift thickness will be established for the fill material and construction equipment proposed.

9. Control the water content of fill material during placement within the range necessary to obtain the compaction specified. In general, the moisture content of the fill shall be within three percent of the optimum moisture content for compaction as determined by laboratory tests. Perform all necessary work to adjust the water content of the material to within the range necessary to permit the compaction specified. Do not place fill material when free water is standing on the surface of the area where the fill is to be placed. No compaction of fill will be permitted with free water on any portion of the fill to be compacted.
10. Compact fill shall be compacted by at least two coverages of all portions of the surface of each lift by compaction equipment. One coverage is defined as the condition obtained when all portions of the surface of the fill material have been subjected to the direct contact of the compactor.
11. If the specified densities are not obtained because of improper control of placement or compaction procedures, or because of inadequate or improperly functioning compaction equipment, perform whatever Work is required to provide the required densities. This Work shall include complete removal of unacceptable fill areas, and replacement and recompaction until acceptable fill is provided.
12. If any settlement occurs, repairs will be at CONTRACTOR'S expense. Make all repairs and replacements necessary within 30 days after notice from ENGINEER or OWNER.
13. Special attention is required to assure compaction under all piping to spring line, if the compaction process is not satisfactory to the ENGINEER. The CONTRACTOR shall use half-sack slurry for backfill to spring line.

C. Backfill in Electrical Ductbank Trenches:
1. Compacted backfill shall be required for the full depth of the trench, below and above the electrical ductbank. Where the trench for one ductbank passes beneath the trench for another pipe or ductbank select backfill shall be placed to the level of the bottom of the upper trench.
2. Placement and compaction of backfill in electrical ductbank trenches shall conform to the requirements of Paragraph 3.8.B., above.

D. Crushed Stone Placement:
1. Crushed stone shall be placed where shown on the Drawings to the limits shown.
2. Crushed stone shall be place in hand tamped lifts, not to exceed 6-inches.

E. Compaction Density Requirements:
1. The degree of compaction required for all types of fills shall be as listed below. Material shall be moistened or aerated as necessary to provide the moisture content that will facilitate obtaining the specified compaction.

| Required Minimum Density-<br>Percent Compaction | *Maximum<br>Uncompacted |
|---|---|

| Material | (ASTM D 698) | Lift (inches) |
|---|---|---|
| Thick.(in) | | |
| Subgrade and Subbase Fill: | | |
| Below concrete slabs on grade | 95 | 8 |
| Below base of footings or mats, structural slabs and tank floors | 95 | 8 |
| Below asphalt concrete paving | 95 | 12 |
| **Structural Backfill: | | |
| More than 5 feet below final grade | 100 | 8 |
| Less than 5 feet below grade | 95 | 8 |
| Aggregate Base Course: | | |
| Below concrete slabs or mats | 95 | 8 |
| Below asphalt paving | 100 | 8 |
| Trench Backfill, below and above ductbanks | 95 | 12 |

* Where applicable.

** Structural backfill shall not be used for support of facilities which are susceptible to damage from differential settlement of the fill section relative to walls.

All fill must be wetted and thoroughly mixed to achieve optimum moisture content, ±three percent, with the following exceptions: On site clayey soils optimum to plus three percent.

Natural undisturbed soils or compacted soil subsequently disturbed or removed by construction operations shall be replaced with materials compacted as specified above.

2. CONTRACTOR'S testing service shall perform tests necessary to provide data for selection of fill material and control of placement water content.
3. Field density tests, to ensure that the specified density is being obtained, shall be performed by CONTRACTOR'S testing service during each day of compaction Work.
4. If the tests indicate unsatisfactory compaction, provide the additional compaction necessary to obtain the specified degree of compaction. All additional compaction Work shall be performed by CONTRACTOR, at no additional cost to the OWNER, until the specified compaction is obtained. This Work shall include complete removal of unacceptable (as determined by the ENGINEER) fill areas and replacement and recompaction until acceptable fill is provided.

F. Replacement of Unacceptable Excavated Materials: In cases where over-excavation for the replacement of unacceptable soil materials is required, the excavation shall be backfilled to the required subgrade with select backfill material and thoroughly compacted as specified in Paragraph 3.08.E., above. Sides of the excavation shall be

sloped in accordance to the maximum inclinations specified for each structure location.

## 3.09 GRADING

A. General: Uniformly grade areas within limits of grading under this Section, including adjacent transition areas. Smooth subgrade surfaces within specified tolerances, compact with uniform levels or slopes between points where elevations are shown on the Drawings, or between such points and existing grades.

B. Grading Outside Building Lines: Grade areas adjacent to building lines to drain away from structures and to prevent ponding. Finish surfaces free from irregular surface changes, and as follows:
   1. Turfed Areas or Areas Covered with Gravel, Stone, Wood Chips, or Other Special Cover: Finish areas to receive topsoil or special cover to within not more than 1-inch above or below the required subgrade elevations.
   2. Walks: Shape surface of areas under walks to line, grade and cross-section, with finish surface not more than 1-inch above or below the required subgrade elevation.
   3. Pavements: Shape surface of areas under pavement to line, grade and cross-section, with finish surface not more than 1/2-inch above or below the required subgrade elevation.

C. Grading Surface of Fill Under Building Slabs: Grade smooth and even, free of voids, compacted as specified, and to required elevation. Provide final grades within a tolerance of 1/2-inch when tested with a ten foot straightedge.

D. Compaction:
   1. After grading, compact subgrade surfaces to the depth and percentage of maximum density for each area classification.

## 3.10 DISPOSAL OF EXCAVATED MATERIALS

A. Material removed from the excavations which does not conform to the requirements for fill or is in excess of that required for backfill shall be hauled away from the project site by CONTRACTOR and disposed of in compliance with ordinances, codes, laws and regulations at no additional cost to the OWNER.

## 3.11 RESTORING AND RESURFACING EXISTING ROADWAYS AND FACILITIES

A. Place 1-1/2 inches of temporary bituminous pavement immediately after backfilling trenches in paved roadways which are to be retained for permanent use. Maintain the surface of the paved area over the trench in good and safe condition during progress of the entire Work, and promptly fill all depressions over and adjacent to the trench caused by settlement of backfilling. The permanent replacement pavement shall be equal to that of the existing roadways, unless otherwise specified.

B. Pavement, gutters, curbs, sidewalks or roadways disturbed or damaged by the CONTRACTOR'S operations, except areas designated "New Pavement" or "Proposed Pavement", shall be restored by CONTRACTOR at his own expense to as good condition as they were previous to the commencement of the Work and in accordance with applicable local and state highway specifications.

## 3.12 TEMPORARY FENCING

A. Furnish and install a temporary fence surrounding his excavations and Work area, including the stockpile and storage areas. Fence shall have openings only at vehicular, equipment and worker access points.

B. Furnish and install a temporary screening fence as shown on the Drawings.

## 3.13 ENVIRONMENTAL PROTECTION AND RESTORATION

A. Refer to and comply with the requirements of Section 01412, Stormwater Pollution Prevention Plan and Permits.

+ + END OF SECTION + +

# SECTION 02318

# CRUSHED STONE, GRAVEL AND DECOMPOSED GRANITE

## PART 1 - GENERAL

### 1.1 DESCRIPTION

A. Scope:
   1. Provide all labor, materials, equipment and incidentals required to furnish and install crushed stone, gravel and decomposed granite of the types specified at locations shown on the Drawings and as directed by the ENGINEER.

### 1.2 QUALITY ASSURANCE

A. Conform to all applicable requirements of Section 701 of the Uniform Standard Specifications for Public Works Construction by the Maricopa Association of Government (MAG) as supplemented by the City of Chandler. Where there is a conflict between MAG Standard Specifications as supplemented by the City of Phoenix and these Specifications, the provisions of these Specifications shall govern.

B. Sampling and sieve analysis shall be performed in accordance with ASTM D 75 and ASTM C 136.

### 1.3 SUBMITTALS

A. Submit for approval the following:
   1. Test reports, including sieve analyses, showing material compliance with specified requirements.

## PART 2 - PRODUCTS

### 2.1 MATERIALS

A. General:
   1. Furnish and place crushed stone or screened gravel fill under pipe or structures where shown on the Drawings in addition to that required under other Sections. Comply with requirements of Section 15051, Buried Piping Installation.
   2. Crushed stone and gravel shall be clean, hard, sound, durable, uniform in quality, and free of any detrimental quantity of soft, friable, thin elongated, or laminated pieces, disintegrated material, organic matter, oil, alkali, or other deleterious substance.
   3. The loss by abrasion in the Los Angeles abrasion machine, determine as prescribed in ASTM C 131, Grading A, shall not exceed ten percent, by weight, after 100 revolutions nor 40 percent after 500 revolutions.

B. Crushed Stone:
   1. Crushed stone shall consist of the product obtained by crushing rock, stone, or gravel so that at least 50 percent by weight of aggregate retained on the No. 4 sieve for 3/4-inch or larger maximum sizes, and 50 percent retained on the No. 8 sieve for maximum sizes less than 3/4-inch shall consist of particles which have at least one rough, angular surface produced by crushing.
   2. The gradation of crushed stone shall comply with ASTM D 448.

C. Gravel:
   1. Material designated herein as gravel shall be composed entirely of particles that are either fully or partially rounded and water-worn.
   2. Crushed rock obtained by crushing rock which exceeds ASTM D 448 maximum gradation sizes may be combined provided it is uniformly distributed throughout and blended with the gravel. The quality and gradation requirements shall be as stated in this specification.

D. Decomposed Granite:
   1. Decomposed granite shall be ¾-inch minus, supplied form a single supply source, for a uniform appearance throughout the Project. It shall be free from lumps or balls of clay and shall not contain any calcareous coatings, caliches, organic matter of foreign substances.

## PART 3 - EXECUTION

### 3.1 PLACING

A. Gravel shall be spread in layers of uniform thickness not exceeding 8-inches and shall be thoroughly compacted with suitable power driven tampers or other power driven equipment. The placing of crushed stone or gravel shall conform to applicable requirements of Section 02315, Structural Excavation and Backfill, except as noted above.

B. At substantial completion and at the end of the 90 day maintenance period, all areas to receive decomposed granite shall be sprayed with a pre-emergent herbicide according to the manufacturer's recommendations within Maricopa Association of Governments (civil) requirements. Do not spray herbicide on any areas designated to receive seeding. Decomposed granite shall be rolled uniformly for depth and compacted to all areas designated on the DRAWINGS to a minimum depth of 2 – inches.

+ + END OF SECTION + +

# SECTION 02514

# PRESSURE LEAKAGE AND TESTING

## PART 1 - GENERAL

### 1.1 DESCRIPTION OF WORK

A. Scope of Work. This section covers pressure and leakage testing of potable large water mains (pipelines). Large water mains are defined as 24-inch or larger, the smaller diameter water mains shall be pressure and leakage as stated in MAG Standard Specifications. Unless otherwise specified, disinfection work shall not be started until cleaning and leakage testing of pipelines has been completed

B. The CONTRACTOR shall provide the labor, tools, equipment, and materials necessary to perform the pressure tests and leakage tests in accordance with the drawings and as specified herein.

### 1.2 QUALITY ASSURANCE

A. Codes and Regulatory Agencies:
   1. Perform all work to provide leakage tests and disinfection in compliance with all federal, state, local codes and regulatory agencies.

B. Standards:
   1. Materials and workmanship shall be in accordance with the following standards as referenced herein:
   2. AWWA – American Water Works Association.
   3. MAG – Maricopa Association of Governments Uniform Standard Specifications for Public Works Construction, as amended to date.

C. Witness:

   1. All tests performed for each pipe test section, facility, or part of a facility shall be witnessed and approved by the ENGINEER before acceptance. In the event the CONTRACTOR performs any test without witness by the ENGINEER, the CONTRACTOR will be required to test the section, facility, or part of a facility again in conformance with this specification at no cost to the OWNER.

### 1.3 SUBMITTALS

A. Hydrostatic Testing Plan:

1. Test Procedures
2. Testing Materials and Equipment

B. Test Reports:

1. Submit test results of all testing included in this section, including but not limited to the following:

a. Pressure tests.

C. Gauge Calibrations:

1. Submit the most recent gauge calibration test report for all gauges used.

## 1.4 JOB CONDITIONS

A. Notification:

1. The ENGINEER shall be notified at least 48 hours prior to any testing and/or disinfecting. The OWNER shall be notified at least 72 hours prior to any disinfecting.

## 1.5 DELIVERY, STORAGE, AND HANDLING

Not used.

## 1.6 SPECIAL WARRANTY

Not used.

# PART 2 - PRODUCTS

Not applicable.

# PART 3 – EXECUTION

## 3.1 EXAMINATION

A. Site Verification of Conditions:

1. Examine conditions under which the pipe test section is to be tested or disinfected and verify that conditions are satisfactory and ready for the test to proceed.

B. Notification:

1. Notify the ENGINEER immediately of all unsatisfactory or nonconforming conditions.

C. Responsibility:

1. Beginning the test means the CONTRACTOR accepts all the existing surfaces and conditions.

## 3.2 PREPARATION

A. Protection:

1. Protect adjacent equipment, materials, piping, and valving against drainage from testing and/or disinfection when and where required.

## 3.3 PRESSURE MAIN AND APPURTENCES TESTING

A. General:

1. The CONTRACTOR shall submit to the ENGINEER a detailed plan for the hydrostatic testing and filling of the sections of the pressure mains. This plan shall include date and duration of the test. The plan shall be submitted 15 days in advance of date testing is to be performed, unless otherwise approved. Test pressures shall be measured at the lowest point of the pipe segment being tested. Only potable water shall be used for flushing and testing the potable water system.
2. The CONTRACTOR will be responsible for disposal of any water associated with hydrostatic testing. The CONTRACTOR shall coordinate with the OWNER to determine disposal locations. Permitting, coordination, and approval of disposal locations are the responsibility of Contractor. The water used for disinfection shall be dechlorinated prior to disposal at these locations.
3. Pressure testing against existing valves or other appurtenances will not be allowed. Testing is allowed against new valves, and temporary bulkheads, plugs, and blind flanges.
4. All temporary plugs, bulkheads, or blind flanges used for hydrostatic testing will be furnished by the CONTRACTOR and incidental to the cost of the pipeline.

B. Pressure And Leakage Test:

1. All pressure mains and process piping shall be pressure and leakage tested in accordance with MAG Specification Section 611.

Prior to the start of testing, buried pipe and fittings must be backfilled and compacted to existing and/or proposed grades.

C. Test Procedure:

1. Each section of pressure main to be tested shall be slowly filled with water and the specified test pressure shall be applied by means of a pump connected to the pipe in a manner satisfactory to the ENGINEER. Before applying the specified test pressure, all air shall be expelled from the pipe. The water pressure shall be brought to the specified test pressures and maintained for at least 2 hours. Leakage will be determined by measuring the quantity of water to be supplied to maintain the specified test pressure.

D. Notification by Engineer:

1. If any leaks, in excess of the specified amount, are not remedied by the CONTRACTOR within one (1) week of notification by the ENGINEER, regardless of whether the cause of these leaks is or is not determined, the ENGINEER shall have the authority to have these leaks repaired by others. The cost of repairs, by others, shall be deducted from monies due or to become due to the CONTRACTOR.

## 3.4 FIELD QUALITY CONTROL

A. Field Tests:

1. All test materials, equipment, chemicals, and water other than the initial fill of transmission main required for testing or disinfection shall be provided by the CONTRACTOR at their expense. Testing shall be done according to the methods described in this section.

B. Witness:

1. All tests performed shall be witnessed and approved by the ENGINEER before acceptance. In the event the CONTRACTOR performs any test without witness by the ENGINEER, the CONTRACTOR will be required to test again in conformance with this specification at their expense.

## 3.5 ADJUSTING

A. Test Results:

1. If the field tests show excessive leakage, the CONTRACTOR shall repair, adjust, modify, or replace the noncomplying pipe sections until the tests are successfully completed. If the field tests show noncompliance with the disinfection requirements, the CONTRACTOR shall repeat the disinfection procedure until the tests are successfully completed. This shall be done at no additional cost to the OWNER.

## 3.6 CLEANING AND DISPOSAL

A. Disposal:

1. The CONTRACTOR is responsible for the removal from the job site and, if necessary, safe disposal of all excess material and debris as a result of the work completed under this section, including testing procedures.

## 3.7 PROTECTION

A. Requirements:

1. The CONTRACTOR shall be responsible for provisions to protect the pipe sections tested and approved, but prior to acceptance by the ENGINEER. Protection of the tested and approved piping sections shall include provisions during installation and testing of nearby piping, valving, or other adjacent equipment. The CONTRACTOR shall remove all protective measures installed at completion and acceptance of the project.

+ + END OF SECTION + +

# SECTION 02515

# CLEANING AND DISINFECTION OF LARGE PIPELINE

## PART 1 - GENERAL

### 1.1 DESCRIPTION OF WORK

A. Scope of Work:

1. This section covers cleaning and disinfection of potable large water mains (pipelines). Large water mains are defined as 24-inch or larger, the smaller diameter water mains shall be cleaned and disinfected as stated in MAG Standard Specifications. Unless otherwise specified, disinfection work shall not be started until cleaning and leakage testing of pipelines has been completed.

B. The CONTRACTOR shall provide the labor, tools, equipment, and materials necessary to perform the leakage tests and disinfection of pressure mains in accordance with the drawings and as specified herein.

### 1.2 QUALITY ASSURANCE

A. Codes and Regulatory Agencies:
1. Perform all work to provide leakage tests and disinfection in compliance with all federal, state, local codes and regulatory agencies.

B. Standards:
1. Materials and workmanship shall be in accordance with the following standards as referenced herein:
   AWWA – American Water Works Association.
   1) AWWA C651 – Disinfecting Water Mains
   2) AWWA C652 – Disinfection of Water-Storage Facilities
   MAG – Maricopa Association of Governments Uniform Standard Specifications for Public Works Construction, as amended to date.
   3) MAG Standard Specification, Section 611, Water, Sewer and Storm Drain Testing

C. Witness:
1. All tests performed for each pipe test section, facility, or part of a facility shall be witnessed and approved by the ENGINEER before acceptance. In the event the CONTRACTOR performs any test without witness by the ENGINEER, the CONTRACTOR will be required to test the section,

facility, or part of a facility again in conformance with this specification at no cost to the OWNER.

## 1.3 SUBMITTALS

D. Disinfection Plan:
   1. Two (2) months prior to starting any disinfection work, CONTRACTOR shall submit to ENGINEER a detailed **disinfection plan**. The plan shall cover the method and procedure proposed, necessary coordination, qualification of personnel performing the disinfection, sequence of operations, equipment to be used, manner of filling and flushing the lines and/or structures, chlorine injection points, sample points, testing schedule, potable water source, neutralization, and disposal of wasted water. Personnel responsible for the disinfection shall demonstrate a minimum of five (5) years experience in the chlorination and dechlorination of similar pipelines. Disinfection Plan shall also include details of maintaining cleanliness during construction and times and quantities of water needed at each stage of construction.

E. Testing:
   1. Bacteriological testing shall be performed by the OWNER. The CONTRACTOR shall coordinate with the OWNER Bacteriological testing technician, at least three (3) days before the testing is needed.
      The chlorine residual test shall be performed by OWNER and the test log shall be made available to CONTRACTOR or ENGINEER.

F. Coordination:
   1. CONTRACTOR shall coordinate flushing and disinfection work with adjacent work as necessary to preclude work interferences or duplication of effort and to expedite the overall progress of the work.
   2. CONTRACTOR shall provide all necessary piping, piping connections, temporary valves, backflow preventers, flowmeters, sampling taps, pumps, disinfectant, neutralization agents, chlorine residual test apparatus, and all other items of equipment or facilities necessary to complete the disinfection work.
   3. In all cases where it is necessary to interrupt service, permission of OWNER shall be obtained at least three (3) days before the service will be interrupted.
   4. CONTRACTOR shall notify the appropriate agencies or parties as required prior to the work to allow their representatives to be present during cleaning and/or disinfection of the water lines if so desired.

G. Governing Standard:
   1. All disinfection work shall conform to the requirements of ANSI/AWWA C651, Disinfecting Water Mains and AWWA C652, Disinfection of Water-Storage Facilities and the requirements of the governing agency as required, except as

modified herein. If any state or local requirements conflict with the provisions of this section, the state and local requirements shall govern.

## 1.4 QUALITY ASSURANCE

A. Chlorine Residual Tests:
   1. CONTRACTOR shall provide the necessary apparatus for making the chlorine residual tests by the drop dilution method as set forth in Appendix A of ANSI/AWWA C651. Test results shall be recorded in a logbook that includes for each test: the location, date, time, test results, and test kit manufacturer.

B. Bacteriological Tests:
   1. Sampling and testing of water in the pipelines shall be performed after final flushing in accordance with Section 5 of ANSI/AWWA C651, including a standard heterotrophic plate count for each sample as determined by the OWNER.

C. Additional Disinfection:
   1. Should the bacteriological tests indicate the presence of coliform organisms at any sampling point, the water mains shall be flushed, resampled and retested. If check samples show the presence of coliform organisms, then the pipelines shall be re-chlorinated until acceptable results are obtained.

## 1.5 JOB CONDITIONS

A. Notification:
   1. The ENGINEER shall be notified at least 48 hours prior to any testing and/or disinfecting. The OWNER shall be notified at least 72 hours prior to any disinfecting.

## 1.6 DELIVERY, STORAGE, AND HANDLING

Not used.

# PART 2 – PRODUCTS

## 2.1 MATERIALS

All materials furnished by CONTRACTOR shall be NSF approved and shall conform to the requirements of ANSI/AWWA C651 and shall be clean and free of debris which could infer questionable test results.

A. Liquid Chlorine:

1. Liquid chlorine shall conform to AWWA B301.

B. Calcium Hypochlorite (Dry):
   1. Calcium hypochlorite shall conform to AWWA B300.

C. Sodium Hypochlorite (Solution):
   1. Sodium hypochlorite shall conform to AWWA B300.

D. Chlorine Residual Test Kit:
   1. Chlorine, residual concentration shall be measured using an appropriate range, drop count, titration kit or a DPD indicator comparator with wide range color discs. The color disc range shall be selected to match chlorine concentration limits. Test kits shall be maintained in good working order and available for immediate test of residuals at point of sampling. Test kits manufactured by Hach Chemical or Hellige are acceptable.

## PART 3 - EXECUTION

### 3.1 APPLICATION

A. Improvements to be disinfected. The following pipelines shall be disinfected as specified herein:
   1. All large diameter water mains and appurtenances shown on construction drawings

   The Contractor shall disinfect pipelines by either the Slug Method or Spray Method (AWWA 651). The selected method for disinfection shall be included in the Contractor's Disinfection Plan. The procedures for each method are specified below.

B. Cleaning of Potable Water Mains:
   1. Standard: AWWA C651
   2. All new piping shall be cleaned by a mechanical cleaning method (e.g. broom sweeping, pressure washing, compressed air).
   3. Cleaning shall remove dirt, debris, and other foreign materials to satisfaction of OWNER and ENGINEER.
   4. Cleaning shall precede disinfection.
   5. All pipelines and appurtenances shall be inspected prior to disinfection.

C. Disinfection Procedures – Pipelines (Spray Method):
   1. Standard: AWWA C651
   2. Chlorine Spray solution shall contain 200 milligrams per liter of chlorine.
   3. Surfaces to be disinfected shall remain in contact with chlorine solution for a minimum of 30 minutes.

4. Potable water shall be admitted, and the full pipeline shall be allowed to stand for 8 hours.
5. After pipeline is filled, a minimum chlorine residual of 1 milligram per liter is required.
6. After the disinfection is satisfactory, OWNER will perform bacterial test.

D. Disinfection Procedure – Pipelines (Continuous Feed / Slug Method):
1. Standard: AWWA C651.
2. Chlorine Slug shall have a chlorine concentration of 100 milligrams per liter (ppm).
3. Surfaces to be disinfected shall remain in contact with chlorine slug for a minimum of three (3) hours.
4. Water in pipeline shall be declorinated and disposed (one (1) pipe volume).
5. All valves and hydrants shall be operated to ensure disinfection.
6. Chlorine solution shall not flow back into supply line.
7. After the disinfection is satisfactory, OWNER will perform bacterial test.

E. Disposal of Chlorinated Wastewater:
1. All water used in disinfecting the pipelines and appurtenances shall be neutralized by dilution or chemical treatment prior to discharge. The manner and rate of disposal of wasted water shall be coordinated with and acceptable to OWNER and ENGINEER. The chlorine residual of wasted water shall not exceed the limits established by the governing agency.
2. The CONTRACTOR is required to submit and obtain OWNER approval of disposal locations prior to commencing this work (included in Contractor's Disinfection Plan).

+ + END OF SECTION+ +

# SECTION 03305

# CONCRETE

## PART 1 - GENERAL

### 1.1 DESCRIPTION

A. Scope:
   1. Provide all labor, materials, equipment, and incidentals as shown, specified, and required to furnish and install concrete, reinforcement, and related materials.
   2. The Work includes:
      a. Providing concrete consisting of portland cement, fine and coarse aggregates, water, and approved admixtures; combined, mixed, transported placed, finished, and cured.
      b. Fabrication and placement of reinforcement, including ties and supports.
      c. Design, erection, and removal of formwork.
      d. Building into the concrete all sleeves, frames, anchors, inserts, and other items required to be embedded in the concrete.
      e. Providing openings in the concrete as required to accommodate Work under this and other Sections.

B. Coordination:
   1. Review installation procedures under other Sections and coordinate the installation of items that must be installed in the concrete.

C. Classifications of Concrete:
   1. Type "1" concrete shall be steel reinforced and includes all concrete, unless indicated otherwise.

### 1.2 QUALITY ASSURANCE

A. Source Quality Control:
   1. Concrete Testing Service:
      a. Employ acceptable testing laboratory to perform materials evaluation, testing, and design of concrete mixes.
      b. OWNER will employ a separate testing laboratory to perform field quality assurance sampling and testing on concrete delivered to and placed at the site. Full access shall be provided by CONTRACTOR to personnel of OWNER’S testing laboratory to Work and shall provide all assistance, including labor and equipment, necessary to facilitate testing and sampling.
   2. Certificates, signed by concrete producer and CONTRACTOR, may be submitted in lieu of material testing when acceptable to ENGINEER.
   3. CONTRACTOR'S testing laboratory will perform field quality control sampling and testing during concrete placement, as follows:
      a. Sampling: ASTM C 172.

b. Slump: ASTM C 143, one test for each load at point of discharge.
c. Air Content: ASTM C 231.
d. Compressive Strength: ASTM C 39, one set of compression strength specimens for each 50 cubic yards or fraction thereof or for each 2,500 square feet of surface area or fraction thereof for each class of concrete placed in any one day.
   1) Test one specimen at seven days and two specimens at 28 days.
   2) When the total quantity of concrete is less than 50 cubic yards, the strength tests may be waived by ENGINEER following review and acceptance of submitted field experience indicating evidence of satisfactory strength.
   3) Slump and air content testing shall be conducted on each sample from which compressive strength specimens are taken.

4. Report test results in writing to ENGINEER on same day tests are made.

B. Standard Specifications and Details:
1. Conform to all applicable requirements of Sections Nos. 505, 725 and 726 of the Uniform Standard Specifications for Public Works Construction by the Maricopa Association of Governments (MAG) as supplemented by the City of Chandler. Where there is a conflict between MAG Standard Specifications as supplemented by the City of Chandler and this Specification, provisions of this Specification shall govern.

C. Reference Standards: Comply with applicable provisions and recommendations of the latest editions of the following, except as otherwise shown or specified.
1. ACI 224, Control of Cracking in Concrete Structures.
2. ACI 301, Specifications for Structural Concrete.
3. ACI 304, Guide for Measuring, Mixing, Transporting, and Placing Concrete.
4. ACI 305, Hot Weather Concreting.
5. ACI 306, Cold Weather Concreting.
6. ACI 309, Guide for Consolidation of Concrete.
7. ACI 315, Details and Detailing of Concrete Reinforcement.
8. ACI 318, Building Code Requirements for Structural Concrete.
9. ACI 347, Guide to Formwork for Concrete.
10. ACI SP-66, ACI Detailing Manual.
11. ASTM A 82, Specification for Steel Wire, Plain, for Concrete Reinforcement.
12. ASTM A 185, Specification for Steel Welded Wire Fabric, Plain, for Concrete Reinforcement.
13. ASTM A 307, Specification for Carbon Steel Bolts and Studs, 60 000 PSI Tensile Strength.
14. ASTM A 615, Specification for Deformed and Plain Billet-Steel Bars for Concrete Reinforcement.
15. ASTM C 33, Specification for Concrete Aggregates.
16. ASTM C 39, Test Method for Compressive Strength of Cylindrical Concrete Specimens.
17. ASTM C 94, Specification for Ready-Mixed Concrete.

18. ASTM C 143, Test Method for Slump of Hydraulic Cement Concrete.
19. ASTM C 150, Specification for Portland Cement.
20. ASTM C 172, Practice for Sampling Freshly Mixed Concrete.
21. ASTM C 231, Test Method for Air Content of Freshly Mixed Concrete by the Pressure Method.
22. ASTM C 260, Specification for Air-Entraining Admixtures for Concrete.
23. ASTM C 309, Specification for Liquid Membrane-Forming Compounds for Curing Concrete.
24. ASTM C 494, Specification for Chemical Admixtures for Concrete.
25. ASTM C 579, Test Method for Compressive Strength of Chemical-Resistant Mortars, Grouts, Monolithic Surfacings and Polymer Concretes.
26. ASTM C 920, Specification for Elastomeric Joint Sealants.
27. ASTM D 1752, Specification for Preformed Sponge Rubber and Cork Expansion Joint Fillers for Concrete Paving and Structural Construction.
28. ASTM E 154, Test Method for Water Vapor Retarders Used in Contact with Earth Under Concrete Slabs, on Walls, or as Ground Cover.
29. CRD-C 572, U. S. Army Corps of Engineers Specification for Polyvinylchloride Waterstops.
30. Concrete Reinforcing Steel Institute (CRSI) 1MSP, Manual of Standard Practice.

## 1.3 SUBMITTALS

A. Samples: Submit samples of materials as specified and as otherwise may be requested by ENGINEER, including names, sources, and descriptions.

B. Submit the following Shop Drawings:
   1. Manufacturer's specifications with application and installation instructions for proprietary materials and items, including admixtures and bonding agents.
   2. Concrete placement plans showing the location and type of all joints.
   3. Drawings for fabrication, bending and placement of concrete reinforcement. Comply with ACI 315 and ACI SP-66. For walls, show elevations to a minimum scale of 1/4-inch to 1 foot. Show bar schedules, stirrup spacing, splice lengths, diagrams of bent bars, arrangements and assemblies, as required for the fabrication and placement of concrete reinforcement.
   4. List of concrete materials and concrete mix designs proposed for use. Include the results of all tests performed to qualify the materials and to establish the mix designs in accordance with ACI 301, Section 4. Submit written report to ENGINEER for each proposed concrete mix at least 15 days prior to start of Work. Do not begin concrete production until mixes have been reviewed and are acceptable to ENGINEER. Mix designs may be adjusted when material characteristics, job conditions, weather, test results, or other circumstances warrant. Do not use revised concrete mixes until submitted to and accepted by ENGINEER.

A. Laboratory Test Reports: Submit copies of laboratory test reports for concrete cylinders, materials and mix design tests. ENGINEER'S review will be for general information only. Production of concrete to comply with specified requirements is the responsibility of CONTRACTOR.

## 1.4 PRODUCT DELIVERY, STORAGE AND HANDLING

A. Deliver concrete reinforcement materials to the site bundled, tagged and marked. Use metal tags indicating bar size, lengths, and other information corresponding to markings shown on placement diagrams.

B. All materials used for concrete must be kept clean and free from all foreign matter during transportation and handling and kept separate until measured and placed in the mixer. Bins or platforms having hard clean surfaces shall be provided for storage. Suitable means shall be taken during hauling, piling, and handling to ensure that segregation of the coarse and fine aggregate particles does not occur and the grading is not affected.

C. Store concrete reinforcement materials to prevent damage and accumulation of foreign material including dirt and excessive rust. Store on framework or blocking such that no materials come in contact with ground. Space framework or blocking supports to prevent excessive deformation of stored materials.

# PART 2 - PRODUCTS

## 2.1 CONCRETE MATERIALS

A. Portland Cement: ASTM C 150, Type II.

B. Aggregates: ASTM C 33.
   1. Fine Aggregate: Clean, sharp, natural sand free from loam, clay, lumps or other deleterious substances. Dune sand, bank run sand, and manufactured sand are not acceptable.
   2. Coarse Aggregate: Clean, uncoated, processed aggregate containing no clay, mud, loam, or foreign matter, as follows:
      a. Crushed stone, processed from natural rock or stone.
      b. Washed gravel, either natural or crushed. Use of slag and pit or bank run gravel is not permitted.

C. Coarse Aggregate Size: ASTM C 33, Nos. 57 or 67, unless permitted otherwise by ENGINEER.

D. Water: Clean, potable.

E. Air-Entraining Admixture: ASTM C 260.

F. Water-Reducing Admixture: ASTM C 494, Type A. Only admixtures which have been tested and accepted in mix designs shall be used.

G. Water Reducing and Set Adjusting Admixtures: ASTM C 494, Type D and E. Only admixtures which have been tested and accepted in mix designs shall be used.

H. High Range Water-Reducing Admixture: ASTM C 494, Type F/G. Only admixtures which have been tested and accepted in mix designs shall be used.

I. Calcium Chloride or admixtures containing chloride ions shall not be used.

## 2.2 CONCRETE MIX

A. General
   1. Normal weight: 145 pounds per cubic foot.
   2. Use air-entraining admixture in all concrete: provide not less than four percent nor more than eight percent entrained air for concrete exposed to freezing and thawing, and from three percent to five percent for other concrete.

B. Proportioning and Design of Type “1” Mix:
   1. Minimum compressive strength at 28 days: 4,000 psi.
   2. Maximum water cement ratio by weight: 0.45.
   3. Minimum cement content: 564 pounds per cubic yard.

C. Proportioning and Design of Type “3” Mix:
   1. The requirements for Type “1” concrete shall be met except that slump shall be increased by the use of a high range water-reducer.

D. Slump Limits:
   1. Proportion and design mixes to result in concrete slump at the point of placement of not less than 1-inch and not more than 4-inches.
   2. Where high range water reducers are used, slump prior to addition of admixture shall not exceed 3-inches. Slump after addition of admixture shall not exceed 8-inches at point of placement.

E. Adjustment to Concrete Mixes:
   1. Concrete mix design adjustments may be requested by CONTRACTOR when warranted by characteristics of materials, job conditions, weather, test results, or other similar circumstances.
   2. Laboratory test data for adjusted concrete mix designs, including compressive strength test results, shall be submitted to ENGINEER for review.
   3. Adjusted mix designs shall be implemented only with the approval of the ENGINEER.
   4. Adjustments to the concrete mix designs shall result in no additional costs to the OWNER.

## 2.3 FORM MATERIALS

A Provide form materials with sufficient stability to withstand pressure of placed concrete without bow or deflection. Responsible for design of the formwork system to resist all applied loads including pressures from fluid concrete and construction loads.

B. Smooth Form Surfaces: Acceptable panel-type to provide continuous, straight, smooth, as-cast surfaces as required by ACI 301.

C. Unexposed Concrete Surfaces: Material to suit project conditions.

D. Provide 3/4-inch chamfer at all external corners. Not required at re-entrant corners, unless indicated otherwise.

E. Form Ties
1. Provide factory-fabricated, removable or snapoff metal form ties, designed to prevent form deflection, and to prevent spalling of concrete surfaces upon removal. Materials used for tying forms will be subject to approval of ENGINEER.
2. Unless otherwise shown, provide ties so that portion remaining within concrete after removal of exterior parts is at least 1.5-inches from the outer concrete surface. Unless otherwise shown, provide form ties that will leave a uniform, circular hole no larger than 1-inch diameter in the concrete surface when removed.
3. Ties for exterior walls, below grade walls, and walls subject to hydrostatic pressure shall have waterstops.
4. Wire ties are not acceptable.

## 2.4 REINFORCING MATERIALS

A. Reinforcing Bars: ASTM A 615, Grade 60 deformed bars.

B. Welded Wire Fabric: ASTM A 185.

C. Steel Wire: ASTM A 82.

D. Supports for reinforcement including bolsters, chairs, spacers and other devices for spacing, supporting and fastening reinforcement in place.
1. Use wire bar-type supports complying with CRSI, “Manual of Standard Practice,” recommendations, except as specified below. Do not use wood, brick, or other unacceptable materials.
2. For slabs on grade, use precast concrete blocks (4-inches square minimum with compressive strength equal to or greater than the surrounding concrete) or

supports with sand plates or horizontal runners where base materials will not support chair legs.

3. For all concrete surfaces, where legs of supports are in contact with forms, provide supports having either hot-dip galvanized, plastic protected or stainless steel legs complying with the requirements of CRSI, "Manual of Standard Practice".
4. Provide precast concrete supports over waterproof membranes.

E. Drilled Dowels:
1. Adhesive material for drilled dowels shall be a vinylester resin, epoxy resin, urethane methacrylate or vinyl urethane resin specifically formulated for the application, moisture condition, application temperature, and orientation of the hole to be filled. Polyester resins shall not be used. The resin shall be a high modulus, moisture insensitive type packaged in a cartridge dispensing system with a mixing nozzle.
2. The adhesive system shall be certified by test to develop a pullout resistance in the specified concrete equal to 125 percent of the yield strength of the dowel bar when embedded to the manufacturer's recommended depth. Drilled dowels shall be embedded a minimum of 12 times the nominal bar diameter into sound concrete.
3. Products and Manufacturers: Provide one of the following:
   a. HIT HY150, by Hilti.
   b. HSE 2421 System, by Hilti.
   c. Epcon System Ceramic 6 or Acrylic 7, by ITW Ramset/Redhead.
   d. Power-Fast, by Powers/Rawl Fastening System.
   e. Or equal.

## 2.5 RELATED MATERIALS

A. Waterstops:
1. Polyvinyl Chloride Waterstops:
   a. Waterstops shall meet the requirements of CRD-C 572. No reclaimed or scrap material shall be used.
   b. Minimum Thickness: 3/8-inch.
   c. Provide waterstops with a minimum of seven ribs equally spaced at each end on each side with the first rib located at the edge. Each rib shall be a minimum 1/8-inch in height.
   d. Construction Joints: Waterstops shall be 6-inch wide flatstrip type.
   e. Expansion Joints: Waterstops shall be 9-inch wide centerbulb type.
   f. Products and Manufacturers: Provide one of the following:
      1) W.R. Meadows, Inc.
      2) A.C. Horn, Inc.
      3) Or equal.
2. Hydrophilic Waterstops:

a. Hydrophilic waterstop materials shall be Bentonite-free and shall expand by a minimum of 80 percent of dry volume in the presence of water to form a watertight joint seal without damaging the concrete in which it is cast.
b. Waterstop material shall be composed of resins and polymers which absorb water and cause a completely reversible and repeatable increase in volume.
c. Waterstop material shall be dimensionally stable after repeated wet-dry cycles with no deterioration of swelling potential.
d. Select material in accordance with manufacturer's recommendations for the type of liquid to be contained.
e. Minimum cross-sectional dimensions: 3/16-inch by 3/4-inch.
f. Location of the hydrophilic waterstops shall be as shown on the Drawings or where approved by the ENGINEER.
g. Products and Manufacturers: Provide one of the following:
    1) Duroseal Gasket, by BBZ USA, Inc.
    2) Adeka Ultraseal MC-2010M, by Asahi Denka Kogyo K.K.
    3) Or equal.
h. Hydrophilic Sealant shall adhere firmly to concrete, metal and PVC in dry or damp condition and be indefinitely elastic when cured.
    1) Products and Manufacturers: Provide one of the following:
        a) Duroseal Paste, by BBZ USA, Inc.
        b) Adeka Ultraseal P-201, by Asahi Denka Kogyo K.K.
        c) SikaSwell S, by Sika Corp.
        d) Or equal.

B. Moisture Barrier: Minimum 8 mil thick clear polyethylene membrane meeting the requirements of ASTM E 154. Provide moisture barrier as shown on the Drawings. Provide minimum 9-inch overlaps at joints.

C. Liquid Chemical Floor Hardener: Provide a clear chemical hardener of the fluorosilicate family.
1. Products and Manufacturers: Provide one of the following:
    a. Lapidolith, by Sonneborn ChemRex, Inc.
    b. Hornolith by A.C. Horn, Inc.
    c. Or equal.

D. Membrane-Forming Curing compound: ASTM C 309, Type I.

E. Epoxy Bonding Agent:
1. Two-component epoxy resin bonding agent.
2. Products and Manufacturers: Provide one of the following:
    a. Sikadur 32, Hi-Mod LPL, by Sika Corp.
    b. Eucopoxy LPL, by the Euclid Chemical Company.
    c. Or equal.

F. Epoxy-Cement Bonding Agent:

1. Three component blended epoxy resin-cement bonding agent.
2. Products and Manufacturers: Provide one of the following:
   a. Sika Armatec 110 EpoCem, by Sika Corp.
   b. Corr-Bond, by the Euclid Chemical Company.
   c. Or equal.

G. Joint Fillers, Sealant and Backer Rod:
1. Preformed Expansion Joint Filler: ASTM D 1752, Type II Cork.
2. Joint Sealant: Where expansion joints are indicated to be subject to being submerged by water, joint sealant shall be a two part polyurethane type sealant conforming to the requirements of ASTM C 920, Type M, Class 25. The sealant shall be formulated for use in continuously submerged conditions and shall be used only with the manufacturer's recommended primer.
   a. Products and Manufacturer's: Provide one of the following:
      1) Permapol RC-270 Reservoir Sealant by Products Research and Chemical Corp.
      2) Sikaflex-2c by the Sika Corp.
      3) Or Equal.
3. Backer Rod: Extruded closed-cell polyethylene foam rod compatible with the sealant material. The backer rod shall be 1/8-inch larger in diameter than the joint width for joints less than 3/4-inch wide and 1/4-inch larger in diameter than the joint width for joints 3/4-inch wide and wider.

## 2.6 GROUT

A. Non-shrink Grout:
1. Prepackaged, non-metallic, cementitious grout requiring only the addition of water at the job site.
2. Minimum 28-day compressive strength: 7000 psi.
3. Products and Manufacturers: Provide one of the following:
   a. NS Grout by the Euclid Chemical Company.
   b. Set Grout by Master Builders, Inc.
   c. NBEC Grout by Five Star Products, Inc.
   d. Or equal.

B. Epoxy Grout:
1. Prepackaged, non-shrink, non-metallic, 100 percent solids, solvent-free, moisture-insensitive, three-component epoxy grouting system.
2. Minimum seven-day compressive strength: 14,000 psi, when tested in accordance with ASTM C 579.
3. Products and Manufacturers: Provide one of the following:
   a. Euco High Strength Grout by the Euclid Chemical Company.
   b. Sikadur 42, Grout Pak by the Corp.
   c. Five Star Epoxy Grout by Five Star Products, Inc.
   d. Or equal.

C. Cement-Sand Grout:
   1. Grout mix shall consist of cement, fine and coarse aggregates, water and admixtures meeting the requirements previously specified for similar materials in concrete.
   2. Proportion and mix grout as follows:
      a. Minimum cement content: 564 pounds per cubic yard .
      b. Maximum water-cement ratio: 0.45.
      d Maximum coarse aggregate size: 1/2-inch, unless indicated otherwise.
      e. Minimum 28-day compressive strength: 4,000 psi.

## PART 3 - EXECUTION

### 3.1 INSPECTION

A. Examine the substrate and the conditions under which Work is to be performed and notify ENGINEER, in writing, of unsatisfactory conditions. Do not proceed with the Work until unsatisfactory conditions have been corrected in a manner acceptable to ENGINEER.

### 3.2 FORMWORK

A. Construct formwork in accordance with ACI 347 such that concrete members and structures are of correct size, shape, alignment, elevation and position.

B. Provide openings in formwork to accommodate Work of other trades. Accurately place and securely support items required to be built into formwork.

C. Clean and adjust forms prior to concrete placement. Apply form release agents or wet forms, as required. Retighten forms during and after concrete placement if required to eliminate cement paste leaks.

D. Removal of Formwork:
   1. Conform to the requirements of ACI 301 and ACI 347, except as otherwise specified.
   2. Formwork or shoring shall not be removed until supported concrete members have acquired a minimum of 90 percent of specified compressive strength. Results of suitable quality control tests of field cured specimens may be submitted to ENGINEER for review as evidence that concrete has attained sufficient strength for removal of supporting formwork and shoring prior to removal times indicated herein.
   3. Removal time for all formwork will be subject to approval of ENGINEER.
   4. Form tie holes shall be repaired following the requirements of ACI 301.

### 3.3 REINFORCEMENT, JOINTS, AND EMBEDDED ITEMS

A. Comply with the applicable recommendations of specified codes and standards, and CRSI "Manual of Standard Practice", for details and methods of reinforcement placement and support.

B. Clean reinforcement to remove loose rust and mill scale, earth, ice and other materials which act to reduce or destroy bond with concrete.

C. Position, support, and secure reinforcement against displacement during formwork construction or concrete placement. Locate and support reinforcing by means of metal chairs, runners, bolsters, spacers and hangers, as required.
   1. Place reinforcement to obtain the minimum concrete coverages as shown and as specified in ACI 318. Arrange, space, and securely tie bars and bar supports together with 16 gage wire to hold reinforcement accurately in position during concrete placement operations. Set with ties so that twisted ends are directed away from exposed concrete surfaces.
   2. Reinforcement shall not be secured to formwork with wire, nails or other ferrous metal. Metal supports subject to corrosion shall not be in contact with formed or exposed concrete surfaces.

D. Provide sufficient numbers of supports of strength required to carry reinforcement. Do not place reinforcement more than 2-inches beyond the last leg of any continuous bar support. Do not use supports as bases for runways for concrete conveying equipment and similar construction loads.

E. Splices: Provide standard reinforcement splices by lapping ends, placing bars in contact, and tying tightly with wire. Comply with requirements shown for minimum lap of spliced bars.

F. Install welded wire fabric in as long lengths as practical, lapping adjoining sections a minimum of one mesh.

G. Concrete shall not be placed until the reinforcement is inspected and permission for placing concrete is granted by ENGINEER. All concrete placed in violation of this provision will be rejected. Notify ENGINEER a minimum of two working days prior to proposed concrete placement.

H. Joints:
   1. Provide construction, isolation, expansion, and control joints as indicated or required. Locate construction joints so as to not impair the strength and appearance of the structure. Place isolation and control joints in slabs-on-grade to stabilize differential settlement and random cracking.
   2. In walls locate joints at a maximum spacing of 40 feet and approximately 12 feet from corners.
   3. In foundation slabs and slabs-on-grade locate joints at a spacing of approximately 40 feet.

4. In mats and structural slabs and beams, locate joints in compliance with ACI 224.
5. The location of all joints shall be as approved by the ENGINEER.
6. Where construction joints are indicated to be roughened, intentionally roughen surfaces of previously placed concrete to a full amplitude of 1/4-inch.

I. Installation of Embedded Items: Set and build into the Work anchorage devices and embedded items required for other Work that is attached to, or supported by cast-in-place concrete. Use setting diagrams, templates and instructions provided under other Sections for locating and setting. Refer also to Paragraph 1.1.B, above. Uncoated aluminum items shall not be embedded in concrete. Where aluminum items come in contact with concrete surfaces, coat aluminum to prevent direct contact with concrete.

J. Drilled Dowels
1. Drilled dowels shall consist of reinforcing dowels set in an epoxy adhesive in a hole drilled into hardened concrete.
2. Holes shall be drilled to the epoxy manufacturer's recommended diameter and depth to develop the required pullout resistance but shall not be greater in diameter than 1/4-inch more than the nominal bar diameter nor less than 12 times the nominal bar diameter in depth.
3. The hole shall be drilled by methods which do not interfere with the proper bonding of epoxy.
4. Existing reinforcement in the vicinity of proposed holes shall be located prior to drilling. The location of holes to be drilled shall be adjusted to avoid drilling through or nicking any existing reinforcement. Adjusted hole locations shall be subject to ENGINEER'S approval.
5. The hole shall be cleaned using a non-metallic fiber bristle brush and blown out with clean, dry compressed air to remove all dust and loose particles.
6. Epoxy shall be injected into the hole through the injection system-mixing nozzle (and any necessary extension tubes) placed to the bottom of the hole. The discharge end shall be withdrawn as epoxy is placed but kept immersed to prevent formation of air pockets. The hole shall be filled to a depth that ensures that excess material is expelled from the hole during dowel placement.
7. Dowels shall be twisted during insertion into the partially filled hole so as to guarantee full wetting of the bar surface with epoxy. The bar shall be inserted slowly enough to avoid developing air pockets.
8. Drill holes, install epoxy and dowels and cure epoxy in accordance with epoxy manufacturer's recommendations and using epoxy manufacturers standard tools and accessories.

## 3.4 CONCRETE PLACEMENT

A. Job-Site Mixing: Use drum type batch machine mixer, mixing not less than 1-1/2 minutes for one cubic yard or smaller capacity. Increase mixing time a minimum of 15 seconds for each additional cubic yard or fraction thereof.

B. Ready-Mixed Concrete: Comply with the requirements of ASTM C 94.

C. Concrete Placement:
   1. Place concrete in a continuous operation within planned joints or sections complying with the requirements of ACI 304.
   2. Do not begin placement until work of other trades affecting concrete is completed.
   3. Wet concrete and subgrade surfaces to a saturated surface dry condition immediately prior to placement of concrete.
   4. Deposit concrete as near its final location as practical to avoid segregation due to re-handling or flowing.
   5. Take care to avoid separation of the concrete mixture during transportation and placement. Concrete shall not be permitted to free fall for a distance greater than four feet during placement.
   6. Concrete placement shall be completed within 90 minutes of the addition of water to the dry ingredients.

D. Consolidate placed concrete in accordance with ACI 309 using mechanical vibrating equipment supplemented with hand rodding and tamping, such that concrete is worked around reinforcement and other embedded items and into all parts of formwork. Insert and withdraw vibrators vertically at uniformly spaced locations. Do not use vibrators to transport concrete within the formwork. Vibration of formwork or reinforcement shall not be permitted.

E. Protect concrete from physical damage or reduced strength due to weather extremes during mixing, placement, and curing.
   1. In hot weather comply with the requirements of ACI 305.
   2. In cold weather comply with the requirements of ACI 306.

## 3.5 QUALITY OF CONCRETE WORK

A. Make all concrete solid, compact, smooth and free of laitance, cracks and cold joints.

B. All concrete for liquid retaining structures, and all concrete in contact with earth, water or exposed directly to the elements shall be watertight.

C. Cut out and properly replace to the extent directed by ENGINEER, or repair to the satisfaction of ENGINEER, surfaces which contain cracks or voids, are unduly rough or are in any way defective. Patches or plastering will not be acceptable.

D. Repair, removal and replacement of defective concrete as ordered by ENGINEER shall be at no additional cost to OWNER.

## 3.6 CURING

A. Begin initial curing as soon as free water has disappeared from exposed surfaces. Where possible, keep continuously moist for not less than 72 hours. Continue curing by use of moisture-retaining cover or membrane-forming curing compound. Cure formed surfaces by moist curing until formwork is removed. Provide protection as required to prevent damage to exposed concrete surfaces. The total curing period shall not be less than seven days. Curing methods and materials shall be compatible with scheduled finishes.

## 3.7 FINISHES

A. Slab Finish:
   1. After placing concrete slabs, do not work the surface further until ready for floating. Begin floating when the surface water has disappeared or when the concrete has stiffened sufficiently. Use a wood float only. Check and level the surface plane to a tolerance not exceeding 1/4-inch in ten feet when tested with a ten foot straightedge placed on the surface at not less than two different angles. Cut down high spots and fill all low spots. Uniformly slope surfaces to drains. Immediately after leveling, re-float the surface to a uniform, smooth, granular texture. All slab surfaces shall receive a float finish. Provide additional trowel finishing as required below.
   2. After floating, begin the first trowel finish operation using a power-driven trowel. Begin final troweling when the surface produces a ringing sound as the trowel is moved over the surface.
   3. Consolidate the concrete surface by the final hand troweling operation. Finish shall be free of trowel marks, uniform in texture and appearance, and with a surface plane tolerance not exceeding 1/8-inch in ten feet when tested with a ten foot straight edge. Grind smooth surface defects which would telegraph through applied floor covering system.
   4. Use trowel finish for the following:
      a. Interior exposed slabs, unless otherwise shown or specified.
      b. Apply non-slip broom finish, after troweling, to exterior concrete slab and elsewhere as shown on the Drawings.

B. Apply chemical floor hardener to exposed interior concrete floor areas when cured and dry, in accordance with manufacturer's instructions.

C. Formed Finish:
   1. Provide a smooth form concrete finish at all exposed surfaces. Use largest practical form panel sizes to minimize form joints. Exposed surfaces also include all interior water bearing surfaces of tanks, whether directly visible or not. All surfaces shall be considered as exposed, unless buried or covered with a permanent structural or architectural material. After form removal, patch all form tie holes and defects in accordance with the requirements of ACI 301. Remove all fins exceeding 1/8-inch in height. Where surface is to be coated or to receive further treatment, remove all fins flush with concrete surface.

2. Provide rough form finish at all unexposed surfaces. After form removal, patch all form tie holes and defects in accordance with the requirements of ACI 301. Remove all fins exceeding 1/2-inch in height.

## 3.8 GROUT PLACEMENT

A. Place grout as shown and in accordance with manufacturer's instructions. If manufacturer's instructions conflict with the specified requirements do not proceed until ENGINEER provides clarification.

B. Dry-packing will not be permitted, unless indicated otherwise.

C. Manufacturers of proprietary products shall make available upon 72 hours notification the services of qualified, full-time employee to aid in assuring proper use of the product under job conditions.

D. Placing grout shall conform to the temperature and weather limitations described in Article 3.4, above.

## 3.9 MISCELLANEOUS CONCRETE ITEMS

A. Core Drilled Holes
   1. All reinforcement in pre-cast concrete structures shall be placed a minimum of 3 inches from the outer edge of the planned location for holes to be core drilled.
   2. The location of holes to be core drilled in pre-cast structures shall be clearly marked on shop drawings, with the location and clearance dimensions from any rebar located within a minimum of 24 inches from the outer edge of the core drilled hole, for approval by the ENGINEER.

B. Temporary Openings
   1. Openings in concrete walls and/or slabs required for passage of Work or installation of equipment and not shown on the Drawings shall be provided, but only with approval of the ENGINEER.
   2. All temporary openings made in concrete shall be provided with waterstop in below grade or water retaining members. Continuity of required reinforcement shall be provided in a manner acceptable to the ENGINEER.
   3. Temporary openings left in concrete structures shall be filled with concrete after the Work causing the need for the opening is in place, unless otherwise shown or directed. Mix, place and cure concrete as specified herein, to blend with in-place construction. Provide all other miscellaneous concrete filling shown or required to complete the Work.

C. Equipment Bases:
   1. Unless specifically shown otherwise, provide concrete bases for all pumps and other equipment. Coordinate and construct bases to the dimensions shown, or as required to meet manufacturers; requirements and Drawing elevations.

Where no specific elevations are shown, bases shall be 6-inches thick and extend 3-inches outside the metal equipment base or supports. Bases shall have smooth trowel finish, unless a special finish such as terrazzo, ceramic tile or heavy duty concrete topping is required. In those cases, provide appropriate concrete finish.

2. Include all concrete equipment base work not specifically included under other Sections.
3. In general, place bases up to 1-inch below the metal base. Properly shim equipment to grade and fill 1-inch void with non-shrink grout as specified in Section 03600, Grout.

D. Curbs:
1. Provide monolithic finish to interior curbs by stripping forms while concrete is still green and steel-troweling surfaces to a hard, dense finish with corners, intersections, and terminations slightly rounded.
2. Exterior curbs shall have rubbed finish for vertical surfaces and a broomed finish for top surfaces.

E. Steel Pan Stairs:
1. Provide concrete fill for steel pan stair treads and landings and associated items. Screed, tamp, and finish concrete surfaces as shown.
   a. Cast-in safety inserts and accessories as shown.

F. Slabs/Foundations:
1. All mechanical pipe and electrical conduit penetrations through concrete slabs must be sleeved.

+ + END OF SECTION + +

# SECTION 03600

# GROUT

## PART 1 - GENERAL

### 1.1 DESCRIPTION

A. Scope:
   1. Provide all labor, materials, equipment, and incidentals as shown, specified and required to furnish and install grout.
   2. The types of grout include the following:
      a. Non-Shrink Grout: This type of grout is to be used wherever grout is shown in the Contract Documents, unless another type is specifically referenced. Two classes of non-shrink grout (Class I and II) and areas of application are specified herein.
      b. Non-Shrink Epoxy Grout (Class III).
      c. Grout Fill, Topping Grout.
      d. Construction Joint Grout.

B. Application: The following is a listing of typical applications and the corresponding type of grout which is to be used. Unless indicated otherwise, grouts shall be provided as listed below whether called for on the Drawings or not.

| Application | Type of Grout |
|---|---|
| Beam and column (1 or 2 story) base plates and precast concrete bearing less than 16-inches in the least dimension. | Non-shrink Class II |
| Column base plates and precast concrete bearing (greater than 2 story or larger than 16-inches in the least dimension). | Non-shrink Class I |
| Base plates for storage tanks and other non-motorized equipment and machinery less than 30 horsepower. | Non-shrink Class I |
| Machinery over 30 horsepower and equipment under 30 horsepower but subject to severe shock loads and high vibration. | Non-shrink Class III |

| | |
|---|---|
| Filling blockout spaces for embedded items such as railing posts, gate guide frames, etc. | Non-shrink Class II (Class I where placement time exceeds 15 minutes) |
| Grouted riprap, toppings and concrete fill less than 4-inches thick. | Grout Fill, Topping Grout |

| Application | Type of Grout |
|---|---|
| Toppings and concrete fill greater than 4-inches thick. | Type "1" Concrete. |
| All anchor bolts and reinforcing steel set in grout. | Refer to Section 05051, Anchor Bolts, Toggle Bolts and Concrete Inserts. |
| Any application not listed above, where grout is called for on the Drawings. | Non-shrink Class I, unless noted otherwise |

## 1.2 QUALITY ASSURANCE

A. Reference Standards: Comply with applicable provisions and recommendations of the following, except as otherwise shown or specified.
   1. ACI 211.1, Practice for Selecting Proportions for Normal, Heavy-Weight and Mass Concrete.
   2. ACI 301, Specification for Structural Concrete (Includes ASTM Standards referred to herein).
   3. ASTM C 33, Specification for Concrete Aggregates.
   4. ASTM C 109, Test Method for Compressive Strength of Hydraulic Cement Mortars (using 2-in. or 50 mm. Cube Specimens).
   5. ASTM C 150, Specification for Portland Cement.
   6. ASTM C 230, Specification for Flow Table for use in Tests of Hydraulic Cement.
   7. ASTM C 531, Test Method for Linear Shrinkage and Coefficient of Thermal Expansion of Chemical- Resistant Mortars, Grouts, and Monolithic Surfacings.
   8. ASTM C 579, Test Method for Compressive Strength of Chemical-Resistant Mortars, Grouts, Monolithic Surfacings and Polymer Concretes.
   9. ASTM C 827, Test Method for Early Volume Change of Cementitious Mixtures.
   10. ASTM C 882, Test Method for Bond Strength of Epoxy-Resin Systems Used with Concrete.
   11. ASTM C 937, Specification for Grout Fluidifier for Preplaced-Aggregate Concrete.

12. ASTM C 939, Text Method for Flow of Grout for Preplaced-Aggregate Concrete (Flow Cone Method).
13. ASTM C 1107, Specification for Packaged Dry, Hydraulic-Cement Grout (Non-shrink).
14. ASTM C 1181, Test Method for Compressive Creep of Chemical-Resistant Polymer Machinery Grouts.
15. ASTM D 696, Test Method for Coefficient of Linear Thermal Expansion of Plastics.

B. Field Tests:
1. Compression test specimens will be taken during construction from the first placement of each type of grout, and at intervals thereafter as selected by the ENGINEER to ensure continued compliance with these specifications. The specimens will be made by the ENGINEER or its representative.
2. Compression tests and fabrication of specimens for non-shrink grout will be performed as specified in ASTM C 109 at intervals during construction as selected by the ENGINEER. A set of three specimens will be made for testing at seven days, 28 days, and each additional time period as appropriate.
3. Compression tests and fabrication of specimens for epoxy grout will be performed as specified in ASTM C 579, Method B, at intervals during construction as selected by the ENGINEER. A set of three specimens will be made for testing at seven days, and each earlier time period as appropriate.
4. The cost of all laboratory tests on grout will be borne by the OWNER, but CONTRACTOR provide assistance to the ENGINEER in obtaining specimens for testing. However, the cost of any additional tests and investigation on work performed which does not conform to the requirements of the specifications belongs to CONTRACTOR. Supply all materials necessary for fabricating the test specimens.

## 1.3 SUBMITTALS

A. Shop Drawings, submit for approval the following:
1. For Grout Fill and Construction Joint Grout, copies of grout design mix and laboratory test reports for grout strength tests.

B. Reports and Certificates, submit for approval the following:
1. For proprietary materials, submit copies of manufacturer's certification of compliance with the specified properties for Class I, II, and III grouts.
2. Submit certified testing lab reports for ASTM C 1107, Grade B and Grade C (as revised herein) requirements for Class I and II grouts tested at a fluid consistency for temperatures of 45, 73.4, 90°F with a pot life of 30 minutes at fluid consistency.
3. Submit certification that materials meet specification requirements for nonproprietary materials.
4. Submit certifications that all grouts used on the project are free of chlorides or other chemicals causing corrosion.

5. Manufacturer's specifications and installation instructions for all proprietary materials.

## 1.4 PRODUCT DELIVERY, STORAGE AND HANDLING

A. Delivery of Materials: Grout materials from manufacturers shall be delivered in unopened containers and shall bear intact manufacturer's labels.

B. Storage of Materials: Grout materials shall be stored in a dry shelter and shall be protected from moisture.

# PART 2 - PRODUCTS

## 2.1 GROUTS

A. General: Non-shrink grout shall be a prepackaged, inorganic, flowable, non-gas-liberating, non-metallic, cement-based grout requiring only the addition of water. Manufacturer's instructions shall be printed on each bag or other container in which the materials are packaged. The specific formulation for each class of non-shrink grout specified herein shall be that recommended by the manufacturer for the particular application.

B. Class I Non-Shrink Grout:
   1. Class I non-shrink grouts shall have a minimum 28 day compressive strength of 7000 psi. This grout is for precision grouting and where water tightness and non-shrink reliability in both plastic and hardened states are critical. Refer to areas of application as specified herein.
   2. Shall meet the requirements of ASTM C 1107 Grade C and B (as modified below) when tested using the amount of water required to achieve the following properties:
      a. Fluid consistency (20 to 30 seconds) in accordance with ASTM C 939
      b. At temperatures of 45, 73.4, and 95°F.
   3. The length change from placement to time of final set shall not have a shrinkage greater than the amount of expansion measured at 3 or 14 days. The expansion at 3 or 14 days shall not exceed the 28-day expansion.
   4. The non-shrink property is not based on a chemically generated gas or gypsum expansion.
   5. Fluid grout shall pass through the flow cone, with a continuous flow, one hour after mixing.
   6. Product and Manufacturer: Provide one of the following:
      a. Masterflow 928, as manufactured by Master Builders, Inc.
      b. Five Star Grout, as manufactured by Five Star Products, Inc.
      c. Hi-Flow Grout, as manufactured by the Euclid Chemical Company
      d. Or equal.

C. Class II Non-Shrink Grout:
   1. Class II non-shrink grouts shall have a minimum 28 day compressive strength of 7000 psi. This grout is for general purpose grouting applications as specified herein.
   2. Shall meet the requirements of ASTM C 1107 and the following requirements when tested using the amount of water required to achieve the following properties:
      a. Flowable consistency (140 percent flow on ASTM C 230, five drops in 30 seconds.)
      b. Fluid working time of at least 15 minutes.
      c. Flowable for at least 30 minutes.
   3. The grout when tested shall not bleed at maximum allowed water.
   4. The non-shrink property is not based on a chemically generated gas or gypsum expansion.
   5. Product and Manufacturer: Provide one of the following:
      a. Set Grout, as manufactured by Master Builders, Inc.
      b. NBEC Grout, as manufactured by Five Star Products, Inc.
      c. NS Grout, as manufactured by the Euclid Chemical Company.
      d. Or equal.

D. Class III Non-Shrink Epoxy Grout:
   1. Epoxy grout shall be a pourable, non-shrink, 100 percent solids system. The epoxy grout system shall have three components: resin, hardener, and specially blended aggregate, all premeasured and prepackaged. The resin component shall not contain any non-reactive diluents. Resins containing butyl glycidyl ether (BGE) or other highly volatile and hazardous reactive diluents are not acceptable. Variation of component ratios is not permitted, unless specifically recommended by the manufacturer. Manufacturer's instructions shall be printed on each container in which the materials are packaged. The following properties shall be attained with the minimum quantity of aggregate allowed by the manufacturer.
   2. Product and Manufacturer: Provide one of the following:
      a. Euco High Strength Grout, as manufactured by The Euclid Chemical Company.
      b. Sikadur 42 Grout Pak, as manufactured by Sika Corporation.
      c. Five Star Epoxy Grout, as manufactured by Five Star Products, Incorporated.
      d. Or equal.
   3. The vertical volume change at all times before hardening shall be between 0.0 percent shrinkage and 4.0 percent expansion when measured according to ASTM C 827 (modified for epoxy grouts by using an indicator ball with a specific gravity between 0.9 and 1.1). Alternately, epoxy grouts which maintain an effective bearing area of not less than 95 percent are acceptable.
   4. The length change after hardening shall be negligible (less than 0.0006 in/in) and the coefficient of thermal expansion shall be less than 0.00003 in/in/F when tested in accordance to the requirements of ASTM C 531.

5. The compressive creep at one year shall be negligible (less than .001 in/in) when tested under a 400 psi constant load at 140°F in accordance to the requirements of ASTM C 1181.
6. The seven day compressive strength shall be a minimum of 14,000 psi when tested in accordance to the requirements of ASTM C 579
7. The grout shall be capable of maintaining at least a flowable consistency for a minimum of 30 minutes at 70°F.
8. The shear bond strength to portland cement concrete shall be greater than the shear strength of the concrete when tested in accordance to the requirements of ASTM C 882.
9. The effective bearing area shall be a minimum of 95 percent.

E. Grout Fill, Topping Grout:
1. Grout for topping of slabs and concrete fill for built-up surfaces of tank, channel, and basin bottoms shall be composed of cement, fine aggregate, coarse aggregate, water, and admixtures proportioned and mixed as specified herein. All materials and procedures specified for normal concrete in Section 03305, Concrete, shall apply except as noted otherwise herein.
2. Topping grout and concrete fill shall contain a minimum of 564 pounds of cement per cubic yard with a maximum water cement ratio of 0.45. Where concrete fill is thicker than 4-inches, Type "1" concrete, as specified in Section 03305, Concrete, may be used when accepted by the ENGINEER.
3. Coarse aggregate shall be graded as follows:

| U.S. STANDARD SIEVE SIZE | PERCENT BY WEIGHT PASSING |
|---|---|
| 1/2-inch | 100 |
| 3/8-inch | 90-100 |
| No. 4 | 20-55 |
| No. 8 | 5-30 |
| No. 16 | 0-10 |
| No. 30 | 0 |

4. Final mix design shall be as determined by trial mix design under supervision of the approved testing laboratory.
5. Strength: Minimum compressive strength of Grout Fill at the end of 28 days shall be 4000 psi.

F. Construction Joint Grout:
1. Construction Joint Grout approximates Type "1" concrete, as specified in Section 03305, Concrete, with aggregate coarser than 1/2-inch removed. The mix is to be designed as flowable with a high mortar content. It is intended to be placed over construction joints and mixed with Type "1" concrete as specified in Section 03305, Concrete. The mix requirements are as follows:
   a. Compressive Strength: 4,500 psi minimum at 28-days.

b. Maximum Water-Cement Ratio: 0.45 by weight.
c. Coarse Aggregate: ASTM C33, No. 8 size.
d. Fine Aggregate: ASTM C33, approximately 60 percent by weight of total aggregate.
e. Air Content: 8±1 percent.
f. Minimum Cement Content: 752 pounds per cubic yard.

G. Requirements for Grout Fill and Construction Joint Grout
1. Proportion mixes by either laboratory trial batch or field experience methods, using materials to be employed on the Project for grout required. Comply with ACI 211.1 and report to ENGINEER the following data:
a. Complete identification of aggregate source of supply.
b. Tests of aggregates for compliance with specified requirements.
c. Scale weight of each aggregate.
d. Absorbed water in each aggregate.
e. Brand, type and composition of cement.
f. Brand, type and amount of each admixture.
g. Amounts of water used in trial mixes.
h. Proportions of each material per cubic yard.
i. Gross weight and yield per cubic yard of trial mixtures.
j. Measured slump.
k. Measured air content.
l. Compressive strength developed at seven days and 28 days, from not less than three test specimens cast for each seven day and 28-day test, and for each design mix.
2. Submit written reports to ENGINEER of proposed mix of grout at least 30 days prior to start of Work. Do not begin grout production until mixes have been approved by ENGINEER.
3. Laboratory Trial Batches: When laboratory trial batches are used to select grout proportions, prepare test specimens and conduct strength tests as specified in ACI 301, Section 4 - Proportioning. However, mixes need not be designed for greater than 125 percent of the specified strength, regardless of the standard deviation of the production facility.
4. Field Experience Method: When field experience methods are used to select grout proportions, establish proportions as specified in ACI 301, Section 4.
5. Admixtures: Use air-entraining admixture in all grout. Use amounts of admixtures as recommended by the manufacturer for climatic conditions prevailing at the time of placing. Adjust quantities and types of admixtures as required to maintain quality control. Do not use admixtures which have not been incorporated and tested in the accepted design mix, unless otherwise authorized in writing by ENGINEER.

## 2.2 CURING MATERIALS

A. Curing materials shall be as specified in Section 03305, Concrete, and as recommended by the manufacturer of prepackaged grouts.

## 2.3 CONSISTENCY

A. The consistency of grouts shall be that necessary to completely fill the space to be grouted for the particular application. Dry pack consistency is such that the grout is plastic and moldable but will not flow. Where "dry pack" is called for in the Contract Documents, it shall mean a grout of that consistency; the type of grout to be used shall be as specified herein for the particular application.

B. The slump for topping grout and grout fill shall be adjusted to match placement and finishing conditions, but shall not exceed 4-inches.

C. The slump for Construction Joint Grout shall be 7 ± 1-inches.

# PART 3 - EXECUTION

## 3.1 INSPECTION

A. Examine the substrate and conditions under which grout is to be placed and notify ENGINEER, in writing, of unsatisfactory conditions. Do not proceed with the Work until unsatisfactory conditions have been corrected in a manner acceptable to ENGINEER.

## 3.2 INSTALLATION

A. General:
   1. Place grout as shown and in accordance with manufacturer's instructions. If manufacturer's instructions conflict with the Specifications do not proceed until ENGINEER provides clarification.
   2. Manufacturers of proprietary products shall make available upon 72 hours notification the services of a qualified, full time employee to aid in assuring proper use of the product under job conditions. 3.
   3. Grout shall be cured following manufacturer’s instructions for prepackaged grout.

B. Columns, Beams and Equipment Bases:
   1. Epoxy grout: After shimming equipment to proper grade, securely tighten anchor bolts. Properly form around the base plates, allowing sufficient room around the edges for placing the grout. Adequate depth between the bottom of the base plate and the top of concrete base must be provided to assure that the void is completely filled with the epoxy grout.
   2. Non-shrink, non-metallic grout: After shimming columns, beams and equipment to proper grade, securely tighten anchor bolts. Properly form around the base plates allowing sufficient room around the edges for placing the grout. Adequate depth between the bottom of the base plate and the top of

concrete base must be provided to assure that the void is completely filled with the non-shrink, non-metallic grout.

C. Handrails and Railings:
   1. After posts have been properly inserted into the holes or sleeves, fill the annular space between posts and sleeve with the non-shrink, non-metallic grout. Bevel grout at juncture with post so that moisture flows away from post.

D. Construction Joints:
   1. Place a 6-inch minimum thick layer of Construction Joint Grout over the contact surface of the old concrete at the interface of horizontal construction joints as specified in Section 03305, Concrete.

E. Topping Grout:
   1. All mechanical, electrical, and finish work shall be completed prior to placement of topping grout. The base slab shall be given a roughened textured surface by sandblasting or hydroblasting exposing the aggregates to ensure bonding to the base slab.
   2. The minimum thickness of grout topping shall be 1-inch.
   3. The base slab shall be thoroughly cleaned and wetted prior to placing topping and fill. No topping concrete shall be placed until the slab is complete free from standing pools or ponds of water. A thin coat of neat Type II cement slurry shall be broomed into the surface of the slab and topping or fill concrete shall be placed while the slurry is still wet. The topping and fill shall be compacted by rolling or tamping, brought to established grade, and floated. Grouted fill for tank and basin bottoms where scraping mechanisms are to be installed shall be screeded by blades attached to the revolving mechanism of the equipment in accordance with the procedures outlined by the equipment manufacturer after the grout is brought to the established grade.
   4. Topping grout placed on sloping slabs shall proceed uniformly from the bottom of the slab to the top, for the full width of the placement.
   5. The surface shall be tested with a straight edge to detect high and low spots which shall be immediately eliminated. When the topping has hardened sufficiently, it shall be steel troweled to a smooth surface free from pinholes and other imperfections. An approved type of mechanical trowel may be used as an assist in this operation, but the last pass over the surface shall be by hand-troweling. During finishing, no water, dry cement or mixture of dry cement and sand shall be applied to the surface.

F. Grout Fill
   1. All mechanical, electrical, and finish work shall be completed prior to placement of grout fill.
   2. The minimum thickness of grout fill shall be 1-inch. Where the finished surface of grout fill is to form an intersecting angle of less than 45 degrees with the concrete surface it is to be placed against, a key shall be formed in the

concrete surface at the intersection point. The key shall be a minimum of 3-1/2-inches wide by 1-1/2-inches deep.

3. The surface shall be tested with a straight edge to verify that the surface slopes uniformly to drain and to detect high and low spots which shall be immediately eliminated. When the grout fill has hardened sufficiently, it shall be steel troweled to a smooth surface free from pinholes and other imperfections. During finishing, no water, dry cement or mixture of dry cement and sand shall be applied to the surface.

+ + END OF SECTION + +

# SECTION 09905

# PAINTING & PROTECTIVE COATING

## PART 1-- GENERAL

### 1.1 DESCRIPTION

A. SCOPE:
1. This Specification Section specifies coating systems, surface preparations, and application requirements.

B. DEFINITIONS:
Specific coating terminology used in this Specification Section is in accordance with definitions contained in ASTM D16, ASTM D3960, and the following definitions:

1. DRY FILM THICKNESS (DFT): The thickness of one fully cured continuous application of coating.

2. FIELD COAT: The application or the completion of application of the coating system after installation of the surface at the site of the work.

3. SHOP COAT: One or more coats applied in a shop or plant prior to shipment to the site of erection or fabrication, where the field or finishing coat is applied.

4. TIE COAT: An intermediate coat used to bond different types of paint coats. Coatings used to improve the adhesion of a succeeding coat.

5. PHOTOCHEMICALLY REACTIVE ORGANIC MATERIAL: Any organic material that will react with oxygen, excited oxygen, ozone or other free radicals generated by the action of sunlight on components in the atmosphere giving rise to secondary contaminants and reaction intermediates in the atmosphere which can have detrimental effects.

6. VOLATILE ORGANIC COMPOUND (VOC) CONTENT: The portion of the coating that is a compound of carbon, is photochemically reactive, and evaporates during drying or curing, expressed in grams per liter or pounds per gallon.

7. TOUCH-UP PAINTING: The application of a paint on areas of painted surfaces to repair marks, scratches, and areas where the coating has deteriorated to restore the coating film to an unbroken condition.

## 1.2 QUALITY ASSURANCE

### A. REFERENCES:

This Specification Section contains references to the following documents. They are a part of this Specification Section as specified and modified. Where a referenced document contains references to other standards, those documents are included as references under this Specification Section as if referenced directly. In the event of conflict between the requirements of this Specification Section and those of the listed documents, the requirements of this Specification Section shall prevail.

Unless otherwise specified, references to documents shall mean the documents in effect at the time of Advertisement for Bids or Invitation to Bid (or on the effective date of the Agreement if there were no Bids). If referenced documents have been discontinued by the issuing organization, references to those documents shall mean the replacement documents issued or otherwise identified by that organization or, if there are no replacement documents, the last version of the document before it was discontinued. Where document dates are given in the following listing, references to those documents shall mean the specific document version associated with that date, regardless of whether the document has been superseded by a version with a later date, discontinued or replaced.

| Reference | Title |
|---|---|
| ASTM D16 | Standard Terminology Relating to Paint, Varnish, Lacquer, and Related Products |
| ASTM D2200 (SSPC-Vis1) | Pictorial Surface Preparation Standards for Painting Steel Surfaces |
| ASTM D3359 A | Methods for Measuring Adhesion by Tape Test |
| ASTM D3960 | Practice for Determining Volatile Organic Compound (VOC) Content of Paints and Related Coatings |
| ASTM D4417 | Field Measurement of Surface Profile of Blast Cleaned Steel |
| F 595 B | Federal Standard Colors |
| SSPC | Steel Structures Painting Council Specifications, Vol. 2 |
| ANSI/NSF 61 | Drinking Water System Components Health Effects |

### B. STANDARDIZATION:

Materials and supplies provided shall be the standard products of manufacturers. Materials in each coating system shall be the products of a single manufacturer.

The standard products of manufacturers other than those specified will be accepted when it is demonstrated to the Engineer that they are equal in composition, durability, usefulness, and convenience for the purpose intended. Requests for substitutions will be considered, provided the following minimum conditions are met:

1. The proposed coating system shall use an equal or greater number of separate coats to achieve the required dry film thickness.

2. The proposed coating system shall use coatings of the same generic type as that specified.

3. Requests for substitution shall have directions for application and descriptive literature which includes generic type, percent solids by volume, volatile organic content (grams per liter), and information confirming that the substitution is equal to the specified coating system.

4. The Contractor shall provide a list of references where paint of the same generic type has been applied. The reference list shall give the project name, city, state, owner, phone number of owner, coating system reference and number, and year paint was applied.

## 1.3 DELIVERY AND STORAGE

Materials shall be delivered to the job site in their original, unopened containers. Each container shall bear the manufacturer's name, coating type, batch number, date of manufacture, storage life, and special directions.

Materials shall be stored in enclosed structures and shall be protected from weather and excessive heat or cold. Flammable materials shall be stored in accordance with state and local codes. Materials exceeding storage life recommended by the manufacturer shall be removed from the site.

# PART 2--PRODUCTS

## 2.1 MATERIALS

The following list specifies the material requirements for coating systems. Coating systems are categorized by generic name followed by an identifying abbreviation. If an abbreviation has a suffix number, it is for the purpose of identifying subgroups within the coating system.

| Coating system | Manufacturer | Product designation coat(s) | Finish coat(s) |
|---|---|---|---|
| Miscellaneous | | | |

| Coating system | Manufacturer | Product designation coat(s) | Finish coat(s) |
|---|---|---|---|
| M-1 | DENSO | Denso Paste | Densyl Tape |
| | TRENTON | Wax Tape Primer | #1 Wax Tape |
| Urethane | | | |
| U | Glidden | 5430 Series | 5410/11 |
| | Tnemec | Series 69 | Series 75 Color |
| | Valspar | V89 Series | V40 Series |
| | Ameron | Amercoat 385 | Amercoat 450 HS |
| | Devoe | Bar-Rust 236 | Devthane 359 |
| | Sherwin-Williams | 920Y137 | 975 Series |
| | International Protective Coatings | Intergard 750 HS | Interthane 990 HS |
| | Carboline/Kop-Coat | 893 | 134 HS |

## 2.2 PRODUCT DATA

Before materials are delivered to the job site, the Contractor shall provide the following information.

1. For each primer and finish coating, the Contractor shall furnish a Material Safety Data Sheet (MSDS).

2. For each primer and finish coating, the Contractor shall provide the manufacturer's application instructions that shall include the following:

   a. Surface preparation recommendations.

   b. Primer type, where required.

   c. Maximum dry and wet mil thickness per coat.

   d. Minimum and maximum curing time between coats, including atmospheric conditions for each.

   e. Curing time before submergence in liquid.

   f. Thinner to be used with each paint.

g. Ventilation requirements.

h. Minimum atmospheric conditions during which the paint shall be applied.

i. Allowable application methods.

j. Maximum allowable moisture content.

k. Maximum storage life.

3. List of materials proposed to be used under this Specification Section and manufacturer's data for each material.

## PART 3--EXECUTION

### 3.1 COATINGS

A. GENERAL:

Coating products shall not be used until the Owner or Engineer has inspected the materials and the coating manufacturer's technical representative has instructed the Contractor and Owner in the surface preparation, mixing and application of each coating.

B. COATING SYSTEMS:

1. SHOP APPLIED PRIME COAT: Except as otherwise specified, prime coats may be shop- or field-applied. Shop-applied primer shall be compatible with the specified coating system and shall be applied at the minimum dry film thickness recommended by the manufacturer. Product data sheets identifying the shop primer used shall be provided to the on-site finish coat applicator. Adhesion tests shall be performed on the shop primer as specified in paragraph 09905-3.2 A. Damaged, deteriorated and poorly applied shop coatings that do not meet the requirements of this Specification Section shall be removed and the surfaces recoated. If the shop primer coat meets the requirements of this Specification Section, the field coating may consist of touching up the shop prime coat and then applying the finish coats to achieve the specified film thickness and continuity.

2. FIELD COATS: Field coats shall consist of one or more prime coats and one or more finish coats to build up the coating to the specified dry film thickness. Unless otherwise specified, finish coats shall not be applied until other work in the area is complete and until all previous coats have been inspected.

C. COATING REQUIREMENTS:

1. EQUIPMENT, NONIMMERSED: All items of equipment, or parts of equipment which are not immersed in service, shall be shop primed and then finish coated in the field after installation with the specified or approved color. The methods, materials, application equipment and all other details of shop painting shall comply with these specifications. If the shop primer requires top coating within a specified period of time, the equipment shall be finish coated in the shop and then touch-up painted after installation.

2. STEEL PIPING: Steel piping shall be prepared in accordance with SSPC SP-6 (Commercial Blast Cleaning) and primed before installation.

## 3.2 PREPARATION

A. GENERAL:

Surfaces to be coated shall be clean and dry. Before applying coating or surface treatments, oil, grease, dirt, rust, loose mill scale, old weathered coatings, and other foreign substances shall be removed except as specified. Oil and grease shall be removed before mechanical cleaning is started. Where mechanical cleaning is accomplished by blast cleaning, the abrasive used shall be washed, graded and free of contaminants that might interfere with the adhesion of the coatings. The air used for blast cleaning shall be sufficiently free of oil and moisture to not cause detrimental contamination of the surfaces to be coated. The Contractor shall examine all surfaces to be coated and shall correct all surface defects before application of any coating.

Clean cloths and clean fluids shall be used in solvent cleaning. Cleaning and painting shall be scheduled so that dust and spray from the cleaning process will not fall on wet, newly painted surfaces. Hardware, hardware accessories, nameplates, data tags, machined surfaces, sprinkler heads, electrical fixtures, and similar uncoated items which are in contact with coated surfaces shall be removed or masked prior to surface preparation and painting operations. Following completion of coating, removed items shall be reinstalled. Equipment adjacent to walls shall be disconnected and moved to permit cleaning and painting of equipment and walls and, following painting, shall be replaced and reconnected.

The Contractor shall perform an **adhesion test** after proper cure in accordance with ASTM D3359, Standard Test Methods for Measuring Adhesion by Tape Test to demonstrate that (1) the shop coat adheres to the substrate, and (2) the specified field coatings adhere to the shop coat. Test results showing an adhesion rating of 5A on immersed surfaces and 4A or better on all other surfaces shall be considered acceptable. Where unacceptable test results are obtained, the Contractor shall be responsible for removing and reapplying the specified coatings at no expense to the Owner.

B. METALLIC SURFACES:

Metallic surfaces shall be prepared in accordance with applicable portions of surface preparation specifications of the Steel Structures Painting Council (SSPC) specified in each coating system. The profile depth of the surface to be coated shall be 20 to 25 percent of the coating dry film thickness as measured by Method C of ASTM D4417. Blast particle size shall be selected by the contractor to produce the specified surface profile. The solvent in solvent cleaning operations shall be as recommended by the manufacturer.

Preparation of metallic surfaces shall be based upon comparison with SSPC-VIS1-89 (ASTM D2200), and as described herein. To facilitate inspection, the Contractor shall, on the first day of blasting operations, abrasive blast metal panels to the standards specified. Plates shall measure a minimum of 8-1/2 inches by 11 inches. Panels meeting the requirements of the specifications shall be initialed by the Contractor and the Construction Manager and coated with a clear non-yellowing finish. One of these panels shall be prepared for each type of abrasive blasting and shall be used as the comparison standard throughout the project.

C. SOLVENT CLEANING:

Any solvent wash, solvent wipe, or cleaner used, including but not limited to those used for surface preparation in accordance with referenced Steel Structures Painting Council (SSPC) specifications, shall be of the emulsifying type which emits no more than 2.8 lb/gal (340 gms/l) VOCs, contains no phosphates, is biodegradable, removes no zinc, and is compatible with the specified primer.

D. DETAILED SURFACE PREPARATION:

Surface preparations for each type of surface shall be in accordance with the specific requirements of each coating specification sheet (COATSPEC).

## 3.3 APPLICATION

A. WORKMANSHIP:

Coated surfaces shall be free from runs, drops, ridges, waves, laps, and brush marks. Coats shall be applied so as to produce an even film of uniform thickness completely coating corners and crevices. Painting shall be done in accordance with the requirements of SSPC Paint Application Specification No. 1.

The Contractor's equipment shall be designed for application of the materials specified. Compressors shall have suitable traps and filters to remove water and oils from the air. A paper blotter test shall be performed by the Contractor when requested by the Owner or Engineerto determine if the air is sufficiently free of oil and moisture to not produce deteriorating effects on the coating system. The amount of oil and moisture in spray air shall be less than the amount recommended by the coating manufacturer. Spray equipment shall be equipped with

mechanical agitators, pressure gages, and pressure regulators, and spray nozzles of the proper sizes.

Each coat of paint shall be applied evenly and sharply cut to line. Care shall be exercised to avoid overspraying or spattering paint on surfaces not to be coated. Glass, hardware, floors, roofs, and other adjacent areas and installations shall be protected by taping, drop cloths, or other suitable measures.

B. PAINT PROPERTIES, MIXING AND THINNING:

Paint, when applied, shall provide a satisfactory film and smooth even surface, and glossy undercoats shall be lightly sanded to provide a surface suitable for the proper application and adhesion of subsequent coats. Paints shall be thoroughly stirred, strained, and kept at a uniform consistency during application. Coatings consisting of two or more components shall be mixed in accordance with the manufacturer's instructions. Where necessary to suit the conditions of the surface, temperature, weather and method of application, the paint may be thinned immediately prior to use. The volatile organic content (VOC) of the coating as applied shall comply with prevailing air pollution control regulations. Unless otherwise specified, paint shall not be reduced more than necessary to obtain the proper application characteristics. Thinner shall be as recommended by the coating manufacturer.

C. ATMOSPHERIC CONDITIONS:

Paints shall be applied only to surfaces that are dry, and only under conditions of evaporation rather than condensation. Paint shall not be applied during rainy, misty weather, or to surfaces upon which there is frost or moisture condensation. During damp weather, when the temperature of the surface to be coated is within 10 degrees F of the dew point, the surfaces shall be heated to prevent moisture condensation thereon. Bare metal surfaces, except those which may be warped by heat, may be dehydrated by flame-heating devices immediately prior to paint application. During painting, and for a period of at least 8 hours after the paint has been applied, the temperature of the surfaces to be painted, the painted surfaces, and the atmosphere in contact shall be maintained at or above 40 degrees F and 10 degrees F above the dew point. Paint, when applied, shall be approximately the same temperature as that of the surface on which it is applied. Fans or heaters shall be used inside enclosed areas where conditions causing condensation are severe.

D. PROTECTION OF COATED SURFACES:

Items that have been coated shall not be handled, worked on, or otherwise disturbed, until the paint is completely dry and hard. After delivery at the site of permanent erection or installation, shop-coated metalwork shall be repainted or retouched with specified paint when it is necessary to maintain the integrity of the film.

E. METHOD OF PAINT APPLICATION:

Where two or more coats are required, alternate coats shall contain sufficient compatible color additive to act as indicator of coverage, or the alternate coats shall be of contrasting colors. Color additives shall not contain lead, or any lead compound which may be destroyed or affected by hydrogen sulfide or any other corrosive gas.

Mechanical equipment, on which the manufacturer's coating is acceptable, shall be touch-up primed and painted with two coats of the specified coating system to match the color scheduled.

Paint shall not be applied to a surface until it has been prepared as specified. The primer or first coat shall be applied by brush to ferrous surfaces that are not blast-cleaned. All coats for blast-cleaned ferrous surfaces and subsequent coats for non-blast-cleaned ferrous surfaces may be either brush or spray applied. After the prime coat is dry, pinholes and holidays shall be marked, repaired in accordance with coating manufacturer's recommendations and retested before succeeding coats are applied.

F. FILM THICKNESS AND CONTINUITY:

Coating system thickness is the total thickness of primer and finish coats.

The surface area covered per gallon of paint for various types of surfaces shall not exceed those recommended by the manufacturer. The first coat, herein referred to as the prime coat, on metal surfaces refers to the first full paint coat and not to any solvent wash, grease emulsifiers or other pretreatment applications. Coatings shall be applied to the thickness specified, and in accordance with these specifications. Unless otherwise specified, the average total thickness (dry) of any completed protective coating system on exposed metal surfaces shall be not less than **1.25 mils per coat**. The minimum thickness at any point shall not deviate more than 25 percent from the required average. Unless otherwise specified, no less than two coats shall be applied.

In testing for continuity of coating about welds, projections (such as bolts and nuts), and crevices, the Owner or Engineer will determine the minimum conductivity for smooth areas of like coating where the dry mil thickness has been accepted. This conductivity shall then be taken as the minimum required for these rough or irregular areas. Pinholes and holidays shall be repainted to the required coverage.

## 3.4 CLEANUP

Upon completion of coating, the Contractor shall remove surplus materials, protective coverings, and accumulated rubbish, and thoroughly clean all surfaces and repair any overspray or other paint-related damage.

## 3.5 COATING SYSTEM SPECIFICATION SHEETS (COATSPEC)

Coating systems for different types of surfaces and general service conditions for which these systems are normally applied are specified on the following COATSPEC sheets. Surfaces shall be coated in accordance with the COATSPEC to the system thickness specified. Coating systems shall be as specified in paragraph 09905-3.6, Coating System Schedule. In case of conflict between the schedule and the COATSPECS, the requirements of the schedule shall prevail.

## 3.5 COATING SYSTEM SPECIFICATION SHEETS (COATSPEC)

Coating System Identification: M-1

Coating Material: Petrolatum based mastic and wrapping tapes.

Surfaces: Metal

Service Condition: Below grade (buried).

Surface Preparation: Remove loose scale, rust, dirt, excessive moisture, or frost from the surface in accordance with SSPC SP-2 (Hand Tool Cleaning).

Application: All surfaces shall be hand rubbed or brushed with a priming paste recommended by the manufacturer. Sharp projections such as threads, irregular contours, or badly pitted areas shall receive a liberal amount of priming paste to ensure maximum protection of metal throughout.

On irregular shaped surfaces, i.e., nuts, bolts, flanges, valves, etc., Contractor shall use either of the following systems recommended by the manufacturer.

A. Apply recommended mastic by hand in sufficient quantity to build an even contour over entire surface. Contractor shall pay particular attention to ensure that all folds and air pockets within the mastic layer are thoroughly pressed out prior to subsequent application of tape.

OR:

B. An extra layer of tape shall be cut and carefully molded around all sharp projections, nuts, bolts, etc., before final application of tape, in order to meet specified system thickness.

Tape shall be spirally wrapped with a 55 percent overlap and sufficient tension and pressure to provide continuous adhesion without stretching the tape. Edges of tape must be continuously smoothed and sealed by hand during wrapping. On vertical application, contractor shall begin at bottom and proceed upward creating a weather board overlap.

## 3.5 COATING SYSTEM SPECIFICATION SHEETS (COATSPEC)

| | |
|---|---|
| Coating System Identification: | M-1 (continued) |
| System Thickness: | Smooth contours shall have a minimum thickness of **50 mils** while nuts, bolts, and sharp projections shall be **100 mils**. |
| Coating: | Number and types of coating shall be in accordance with the manufacturer's written instructions. |

## 3.5 COATING SYSTEM SPECIFICATION SHEETS (COATSPEC)

| | |
|---|---|
| Coating System Identification: | U |
| Coating Material: | Urethane |
| Surface: | Metal |
| Service Condition: | Exterior, exposed to direct sunlight. |
| Surface Preparation: | |
| General: | Shop primed surfaces which are to be incorporated in the work shall be prepared in the field by cleaning all surfaces in accordance with SSPC SP-2 (Hand Tool Cleaning). Damaged shop coated areas shall be cleaned in accordance with SSPC SP-3 (Power Tool Cleaning) and recoated with the primer specified. |
| Ferrous Metal: | Bare ferrous metal surfaces shall be prepared in accordance with SSPC SP-6 (Commercial Blast Cleaning).<br><br>Ferrous metal with rust bleeding shall be cleaned in accordance with SSPC SP-1 (Solvent Cleaning). Areas of rust penetration shall be spot blasted to SSPC SP-10 (Near White Blast) and spot primed with the specified primer. |
| Nonferrous and Galvanized Metal: | Nonferrous and galvanized metal shall be prepared in accordance with SSPC SP-1 (Solvent Cleaning). |
| Application: | Field |
| General: | Prime coat may be thinned and applied as recommended by the manufacturer, provided the coating as applied complies with prevailing air pollution control regulations. |
| Ferrous Metal: | Prime coats shall be an epoxy primer compatible for use with urethane finish coats and applied in accordance with written instructions of the coating system manufacturer. |

## 3.5 COATING SYSTEM SPECIFICATION SHEETS (COATSPEC)

| | |
|---|---|
| Coating System Identification: | U (continued) |
| Nonferrous and Galvanized Metal: | Nonferrous and galvanized metal shall be cleaned prior to the application of the prime coat in accordance with SSPC SP-1 (Solvent Cleaning). |
| System Thickness: | 10 mils dry film of epoxy and 4 mils dry film of urethane (**total thickness of 14 mils**). |
| Coatings: | |
| Primer: | Two coats at manufacturers recommended dry film thickness. |
| Finish: | One or more coats at manufacturer's recommended dry film thickness per coat to the specified system thickness. |

## 3.6 COATING SYSTEMS SCHEDULE (FINISH SCHEDULE)

Specific coating systems, colors, and finishes for rooms, galleries, piping, equipment, and other items which are painted or have other architectural finishes are specified in the following coating system schedule. Unless otherwise specified in the coating system schedule, the word "interior" shall mean the inside of a building or structure, and the word "exterior" shall mean outside exposure to weather elements.

| Location/description | Coating system identification | Color |
|---|---|---|
| Air/Vacuum Valve | U | Tan |
| Air/Vacuum Guard Shack | U | Tan |
| Dewatering Standpipe, cast iron lid | U | Blue |
| **Exterior (above ground)**<br>Pipe, valves, fittings, and piping appurtenances. | U | Blue |
| **Below grade (buried)**<br>Valves, fittings, and piping appurtenances. | M | Blue |

*Owner to select color. Submit color chart per MAG specifications

+ + END OF SECTION + +

# SECTION 15050

# PIPING SYSTEMS

## PART 1 - GENERAL

### 1.1 DESCRIPTION

A. Scope:
   1. This Section specifies systems of process piping and general requirements for piping systems. Detailed Specifications for the components listed on the Piping System Specification Sheets are found in the applicable Sections of Division 15, Mechanical. This Section shall be used in conjunction with those Sections.
   2. Provide all labor, materials, equipment and incidentals as shown on the Drawings, specified and required to furnish, install and test all piping, fittings and specials. The Work includes, but is not limited to, the following:
      a. All types and sizes of piping, except those specified under other Sections.
      b. Piping beneath, embedded or within structures.
      c. Supports, restraints and thrust blocks.
      d. Pipe encasements.
      e. Work on or affecting existing piping.
      f. Testing.
      g. Cleaning and disinfecting.
      h. Installation of all jointing and gasket materials, specials, flexible couplings, mechanical couplings, harnessed and flanged adapters, sleeves, tie rods and all other Work required to complete the piping installation.
         1) Gasket materials shall comply with National Sanitation Foundation (NSF-61) and Arizona Administration Code requirements as stated in Specification Section 01420 – References.
      i. Incorporation of valves, meters and special items shown on the Drawings or specified into the piping systems as required and as specified in the appropriate Division 15, Mechanical, Sections.
      j. Unless otherwise specifically shown on the Drawings, specified, or included under other Sections, all buried piping Work required begins at the outside face of structures or structure foundations and extending away from structure.

B. Coordination:
   1. Review installation procedures under other Sections and coordinate with the Work that is related to this Section.

C. Definitions:
   1. Pressure terms used in this Section and elsewhere in Division 15, Mechanical, are defined as follows:
      a. Maximum: The greatest continuous pressure at which piping system operates.
      b. Test: The hydrostatic pressure used to determine system acceptance.

## 1.2 QUALITY ASSURANCE

A. Conform to all applicable requirements of Parts 600 and 700 of the Uniform Standard specifications for Public Work Construction by the Maricopa Association of Governments (MAG) and City of Chandler Supplements. If there is a conflict between MAG Standard specifications and these Specifications, the Provisions of these Specifications shall govern.

B. Requirements of Regulatory Agencies:
   1. Refer to the General and Supplementary Conditions regarding permit requirements for this Work.

C. Reference Standards: Comply with applicable provisions and recommendations of the following, except as otherwise shown or specified.
   1. AASHTO M36/M36M, Metallic (Zinc or Aluminum) Coated Corrugated Steel Culverts and Underdrains.
   2. ANSI A13.1, Scheme for the Identification of Piping Systems.
   3. ANSI B1.20.1, Pipe Threads, General Purpose (Inch).
   4. ANSI B16.1, Cast Iron Pipe Flanges and Flanged Fittings Class 25, 125, 250, and 800.
   5. ANSI B16.3, Malleable Iron Threaded Fittings Class 150 and 300.
   6. ANSI B16.5, Pipe Flanges and Flanged Fittings.
   7. ASTM A 312/A312M, Specification for Seamless and Welded Austenitic Stainless Steel Pipe.
   8. ASTM A 403/A403M, Specification for Wrought Austenitic Stainless Steel Piping Fittings.
   9. ASTM A 536, Specification for Ductile Iron Castings.
   10. ASTM B 88, Specification for Seamless Copper Water Tube.
   11. ASTM D 1784, Specification for Rigid Poly (Vinyl Chloride) (PVC) Compounds and Chlorinated Poly(Vinyl Chloride) (CPVC) Compounds.
   12. ASTM D 2241, Specification for Poly (Vinyl Chloride) (PVC) Plastic Pipe (SDR-PR).
   13. ASTM D 2513, Specification for Thermoplastic Gas Pressure Pipe, Tubing, and Fittings.
   14. ASTM D 2665, Specification for Poly (Vinyl Chloride) (PVC) Plastic Drain, Waste, and Vent Pipe and Fittings.
   15. ASTM D 2996, Specification for Filament-Wound Reinforced Thermosetting Resin Pipe.

16. ASTM D 3034, Specification for Type PSM Poly (Vinyl Chloride) (PVC) Sewer Pipe and Fittings.
17. ASTM D 3261, Specification for Butt Fusion Polyethylene (PE) Plastic Fittings for Polyethylene (PE) Plastic Pipe and Tubing.
18. ASTM D 3262, Specification for "Fiberglass" (Glass-Fiber-Reinforced Thermosetting-Resin) Sewer Pipe.
19. ASTM D 4174, Practice for Cleaning, Flushing, and Purification of Petroleum Fluid Hydraulic Systems.
20. ASTM D 4101, Specification for Propylene Plastic Injection and Extrusion Materials.
21. ASTM F 441, Specification for Chlorinated Poly (Vinyl Chloride) (CPVC) Plastic Pipe, Schedules 40 and 80.
22. AWWA C110, Ductile-Iron and Gray-Iron Fittings, 3 Inch Through 48 Inch, for Water and Other Liquids.
23. AWWA C111, Rubber-Gasket Joints for Ductile-Iron and Gray-Iron Pressure Pipe and Fittings.
24. AWWA C115, Flanged Ductile-Iron and Gray-Iron Pipe with Threaded Flanges.
25. AWWA C151, Ductile-Iron Pipe, Centrifugally Cast in Metal Molds or Sand-Lined Molds, for Water or Other Liquids.
26. AWWA C200, Steel Water Pipe 6 Inch and Larger.
27. AWWA C208, Dimensions for Fabricated Steel Water Pipe Fittings.
28. AWWA C210, Liquid Epoxy Coating Systems for the Interior and Exterior of Steel Water Pipe.
29. AWWA C303, Concrete Pressure Pipe, Bar-Wrapped, Steel-Cylinder Type.
30. AWWA C600, Installation of Ductile-Iron Water Mains and Their Appurtenances.
31. AWWA C651, Disinfecting Water Mains.
32. AWWA C900, Polyvinyl Chloride (PVC) Pressure Pipe, 4 Inches Through 12 Inches, for Water.
33. National Sanitation Foundation (NSF-61) and Arizona Administration Code requirements as stated in Specification Section 01420 – References.

D. Fitting and Coupling Compatibility:
   1. To assure uniformity and compatibility of piping components, fittings and couplings for grooved end piping systems shall be furnished by the same manufacturers.

## 1.3 SUBMITTALS

A. Shop Drawings: Submit for approval the following:
   1. Detailed drawings and data on pipe, fittings, gaskets and appurtenances. Submit these with Shop Drawings required under Section 15050, Piping Systems, Section 15051, Buried Piping Installation, and Section 15052, Exposed Piping Installation.

B. Certificates: Submit certificates of compliance with Referenced Standards.

## 1.4 PRODUCT DELIVERY, STORAGE AND HANDLING

A. General:
   1. Deliver materials to the site to ensure uninterrupted progress of the Work.
   2. Handle all pipe, fittings, specials and accessories carefully with approved handling devices. Do not drop or roll material off trucks. Do not otherwise drop, roll or skid piping.
   3. Store pipes and fittings on heavy wood blocking or platforms so they are not in contact with the ground.
   4. Unload pipe, fittings and specials opposite to or as close to the place where they are to be installed as is practical to avoid unnecessary handling. Keep pipe interiors completely free from dirt and foreign matter.
   5. Inspect delivered pipe for cracked, gouged, chipped, dented or other damaged material and immediately remove defective pipe from site.

# PART 2 - PRODUCTS

## 2.1 PIPING MATERIALS

A. Unless otherwise specified, piping materials, including pipe, gaskets, fittings, connection and joint assemblies, linings and coatings, shall be selected from those listed on the Piping System Specification Sheets. Piping materials shall conform to detailed Specifications for each type of pipe and piping appurtenances specified in the applicable Sections of Division 15, Mechanical.

B. Materials or products which can contact drinking water as part of a water treatment process or water supply system including but not limited to pipe, gaskets, fittings, linings, coatings, etc., must comply with National Sanitation Foundation (NSF-61) and Arizona Administration Code requirements as stated in Specification Section 01420 – References.

## 2.2 PIPING IDENTIFICATION

A. Marking Piping:
   1. Clearly mark each piece of pipe or fitting with a designation conforming to that shown on the approved Shop Drawings.
   2. Cast or paint material, type and pressure designation on each piece of pipe or fitting 4-inches in diameter and larger.
   3. Pipe and fittings smaller than 4-inches in diameter shall be clearly marked by manufacturer as to material, type and rating.
   4. Markers bearing the legends on the background colors specified in Section 09905, Painting and Protective Coating, and shall be provided in the following letter heights:

| Outside Pipe Diameter,[a] (inches) | Letter Height, (inches) |
|---|---|
| Less than 1-1/2 | 1/2 |
| 1-1/2 through 3 | 1-1/8 |
| Greater than 3 | 2-1/4 |

[a] Outside pipe diameter shall include insulation and jacketing.

In addition, pipe markers shall include uni- and bi-directional arrows in the same sizes as the legend. Legends and arrows shall be white on blue or red backgrounds and black on other specified backgrounds.

B. Plastic Tracer Tape: Tracer tape shall be 6-inches wide, colored the same as the background colors as specified in Section 09905, Painting and Protective Coating, and made of inert plastic material suitable for direct burial. Tape shall be capable of stretching to twice its original length and shall be as manufactured by Allen Systems, W. H. Brady Co., Seton Name Plate Corporation, Marking Services Inc., or equal.

A message shall be printed on the tape. Which shall read "CAUTION CAUTION CAUTION _____ PIPE BURIED BELOW" with bold letters approximately 2-inches high. The blank shall be filled with the particular system fluid such as chlorine, oxygen or sulfur dioxide.

C. Magnetic Tracer Tape: Polyethylene magnetic tracer tape shall be as manufactured by Allen Systems, W.H. Brady Co., Seton Name Plate Corporation, Marking Services, Inc., or equal. Tape shall be acid and alkali-resistant, 3-inches wide, 0.005-inch thick, and have 1500-psi strength and 140 percent elongation value. The tape shall be colored the same as the background colors as specified in Section 09905, Painting and Protective Coating, and shall be inscribed with the word "CAUTION – PIPE BURIED BELOW" and the name of the piping system.

## 2.3 VALVES

A. Valves of the same size and service shall be provided by a single valve manufacturer. Packing shall be non-asbestos material. Actual length of valves shall be within 1/16-inch (plus or minus) of the manufacturer's specified length. Flanges shall meet the requirement of ANSI B16.5. Push-on and mechanical joints shall meet the requirements of AWWA C111 and conform to the requirements of Section 15051, Buried Piping Installation.

# PART 3 - EXECUTION

## 3.1 INSTALLATION - GENERAL

A. Location:

1. Piping shall be provided as specified, except for adjustments to avoid architectural and structural features and shall be coordinated with electrical construction.

B. Piping Sizes:
1. Where the size of piping is not shown on the Drawings or specified, provide piping of the sizes required by UPC. Unless specified otherwise, small piping (less than 1-inch in diameter) required for services not described by UPC shall be 1/2-inch.

C. Pipe Support, Anchorage and Seismic Bracing:
1. Piping shall be supported by anchor brackets, guides, saddles or hangers. Acceptable types of supports, guides, saddles, hangers and structure attachments for general pipe support, expansion/contraction and for seismic bracing, as well as anchorage details, are shown on the Drawings. Minimum spacing shall be as specified for supports and for seismic bracing. Where a specific type of support or anchorage is shown on the Drawings, then only that type shall be used there. Piping shall be vertically supported by anchor brackets, guides, saddles or hangers and shall be seismically braced where indicated to resist lateral load. Supports shall be provided on each run at each change of direction. Pipe supports, components and hardware shall be Type 304L stainless steel. Unless otherwise specified, existing pipes and supports shall not be used to support new piping.
2. Pipe shall be supported, alignment and installed in such a way so as not to impose undue stress/forces to couplings, connections, supports, valves, equipment and instruments.

D. Thrust Restraint:
1. General: All plugs, caps, tees and bends in buried pressure piping systems shall be anchored by means of reaction backing or restrained joints as specified.
2. Restrained Pipe Joints: Pipe joints shall be restrained by means suitable to the type of pipe being installed.
   a. Ductile-iron push on joints and mechanical joints shall be restrained utilizing a proprietary restrained joint system such as:
      1) American Loc-Ring or Flex-Ring
      2) Clow Super-Lock Joint
      3) EBBA Iron Sales Inc. Megalug
      4) U.S. Pipe TR Flex Joint
      5) Or Equal

   b. Thermoplastic and copper piping shall generally be installed with soldered, solvent weld, threaded, flanged, or similar type joints. Where push-on type or other non-restrained joints are provided, provide tie rods or other suitable joint restraint system for these joints, subject to the approval of ENGINEER.

c. Harnessed lengths for pipe shall be determined by the pipe manufacturer in accordance with the formula in Section 15051, Buried Piping Installation, for determination of harnessed lengths.
d. Restrain ductile iron pipe connected to flexible couplings or flanged coupling adapters by harnessing across the coupling or adapter using tie rods or extended bolts connecting between flanges.

E. Manufacturer's Installation Specialist:
1. Provide the services of a competent installation specialist of the pipe manufacturer when pipe laying begins, if CONTRACTOR is not experienced in laying and jointing a particular type of pipe.
2. Retain installation specialist at the site for a minimum of two days or until competency of the pipe laying crew has been satisfactorily demonstrated.

F. Bedding and Backfill:
1. Bedding and backfill for buried piping shall conform to the requirements of Section 15051, Buried Piping Installation.

## 3.2 PIPING IDENTIFICATION

A. Pipe Coding:
1. After application of the specified coating and insulation systems, exposed piping, interior and exterior, and piping in ceiling spaces, pipe trenches, pipe chases and valve boxes shall be identified with painted bonding and lettering as specified in Article 2.2, above. Legend markers and directional arrows shall be located at each side of walls, floors and ceilings, at one side of each piece of equipment, at piping intersections, and at approximately 25-foot centers.

B. Magnetic Tracer Tape: Polyethylene magnetic tracer tape shall be buried 12 to 18-inches below finished grade and shall be above and parallel to buried non-ferrous, plastic and reinforced thermosetting resin pipe lines. For pipelines buried eight feet or greater below finished grade, provide a second line of tape 2.5 feet above and parallel to each buried pipe.

## 3.3 WORK AFFECTING EXISTING PIPING

A. Location of Existing Piping:
1. Locations of existing piping shown on the Drawings should be considered approximate.
2. Determine the true locations of existing piping to which connections are to be made, and locations of other facilities which could be disturbed during

earthwork operations, or which may be affected by CONTRACTOR'S Work already installed.

3. Conform to applicable requirements of Division 1, General Requirements, pertaining to cutting and patching and connections to existing facilities.

B. Taking Existing Pipelines Out of Service:
   1. Do not take pipelines out of service, unless specifically listed below, or approved by ENGINEER.
      a. Refer to Section 01143, Coordination with OWNER'S Operations.
   2. Notify ENGINEER at least 48 hours prior to taking pipeline out of service.

C. Work on Existing Pipelines:
   1. Cut or tap pipes as shown on the Drawings or required, with machines specifically designed for this Work.
   2. Install temporary plugs to prevent entry of mud, dirt, water and debris.
   3. Provide all necessary adapters, fittings, pipe and appurtenances required to complete the Work.
   4. Existing pipelines which are cut and abandoned shall be adequately capped or filled with grout.

## 3.4 TESTING

A. General:
   1. Upon completion of piping, but prior to application of insulation on exposed piping, test the piping systems. Pressures, media and test durations shall be as specified in Article 3.6, below. Equipment which may be damaged by the specified test conditions shall be isolated. Testing shall be performed using calibrated test gages and calibrated volumetric measuring equipment to determine leakage rates. Each test gage shall be selected so that the specified test pressure falls within the upper half of the gage's range. Unless otherwise specified, notify the ENGINEER 24 hours prior to each test.
   2. Unless otherwise specified, testing, as specified herein, shall include existing piping systems which connect with new piping systems. Existing pipe shall be tested to the nearest existing valve. Any piping which fails the test shall be repaired. Repair of existing piping will be considered and paid for as extra work.

   3. Hydrostatic Testing: Hydrostatic Testing shall be per MAG requirements.
   4. Deflection Testing: The maximum long term deflection recommended by Maricopa Association of Governments (MAG Standard Specification 615 for flexible pipe is five (5) percent of nominal diameter. During construction, the Contractor shall verify that thermoplastic pipe does not exceed the maximum standard deflection. The new pipe shall be subjected to a deflection test in accordance with MAG Standard Specification 615.11.C. This test shall be

completed by pulling a "go/no go" deflection test mandrel through the completed pipeline. Testing shall be completed no less than 30 days after the trench backfill and compaction has been completed. Pipe or fittings not passing the mandrel test shall be rejected and corrected (repair or replacement) by the Contractor at no cost to the Owner.

## 3.5 CLEANING AND FLUSHING

A. General:
   1. Piping systems shall be cleaned following completion of testing and prior to connection to operating, control, and regulating or instrumentation equipment. At CONTRACTOR'S option, may clean and test sections of the buried or exposed piping systems. Use of this procedure; however, will not waive the requirement for a full pressure test of the completed system. Unless specified otherwise, piping 24-inches in diameter and smaller shall be cleaned by flushing per MAG.

## 3.6 PIPING SPECIFICATION SHEET

A. General:
   1. Piping and valves for groupings of similar plant processes or types of service lines are specified on individual Piping Specification Sheets. Piping systems are grouped according to the chemical and physical properties of the fluid conveyed and/or by the temperature or pressure requirements. Each grouping of systems is identified by a piping system number. Piping systems specified on the Drawings are numerically arranged by system as shown in Table A (below). Table A also indicates the system number and fluid category for each service.

(The remainder of this page was left blank intentionally.)

**Table A - Piping Systems**

| Article No. | System No. | Symbol | Service Descriptions | Fluid Category |
|---|---|---|---|---|
| 3.18 | 7 | CW | Domestic Cold Water | Water |
| | 7 | PW | Potable Water | Water |

(The remainder of this page was left blank intentionally.)

3.18 SYSTEM - 7

| | | |
|---|---|---|
| Piping Symbol/Service: | CW | Domestic Cold Water |
| | PW | Potable Water |

| | | | |
|---|---|---|---|
| Test Requirements: | Medium: | Water: Refer to Section 02514, Pressure and Leakage Testing. | |
| | Pressure: | Piping Systems: Refer to Section 02514, Pressure and Leakage Testing. | |
| | Duration: | Refer to Section 02514, Pressure and Leakage Testing. | |
| Gasket Requirements: | Flange: | Refer to Section 15101, Ductile Iron Pipe. Refer to Section 15102, Steel Pipe – Lined and Coated. | |
| | Push-on/Mech Cpl: | Refer to Section 15101, Ductile Iron Pipe. | |
| Exposed Pipe/Valves: | | | |
| 4-inches and larger | Pipe: | Ductile Iron: | Class 350 with cement mortar lining. Refer to Section 15101, Ductile Iron Pipe. |
| | | Steel: | Refer to Section 15102, Steel Pipe – Lined and Coated |
| | | Conn: | Grooved mechanical pipe coupling or flanged. |
| | | Ftgs: | Refer to Section 15101, Ductile Iron Pipe and Section15102, Steel Pipe – Lined and Coated, ends and lining to match pipe. |
| 2-1/2-inches and larger | Valves: | Gate: | Refer to Section 15110, Gate Valves, Operators and Appurtenances. |

++ END OF SECTION ++

# SECTION 15051

# BURIED PIPING INSTALLATION

## PART 1 - GENERAL

### 1.1 DESCRIPTION

A. Scope:
   1. Provide all labor, materials, equipment and incidentals as shown on the Drawings, specified and required to perform all excavating, backfilling, filling, grading and disposing of earth materials and to furnish, install and test all buried piping, fittings, and specials. The Work includes, but is not limited to, the following:
      a. Excavation and backfill.
      b. All temporary means required to prevent discharge of sediment to water courses from dewatering systems or erosion.
      c. All types and sizes of buried piping, except those specified under other Sections.
      d. Piping beneath structures.
      e. Restraints and thrust blocks.
      f. Pipe encasements.
      g. Work on or affecting existing piping.
      h. Testing.
      i. Cleaning and disinfecting.
      j. Installation of all jointing and gasketing materials, specials, flexible couplings, mechanical couplings, harnessed and flanged adapters, sleeves, tie rods, and all other Work required to complete the buried piping installation.
      k. Incorporation of valves, meters and special items shown on the Drawings or specified into the piping systems as required and as specified in the appropriate Division 15, Mechanical, Sections.
      l. Unless otherwise specifically shown on the Drawings, specified, or included under other Sections, all buried piping Work required, beginning at the outside face of structures or structure foundations and extending away from structure.
   2. No classification of excavated materials will be made. Excavation includes all materials regardless of type, character, composition, moisture, or condition thereof.

B. Coordination:
   1. Review installation procedures under other Sections and coordinate with the Work that is related to this Section.

2. Section 15051, Buried Piping Installation, specifies the installation of all buried piping materials specified in Sections of Division 15, Mechanical. Coordinate with all applicable Sections.

## 1.2 QUALITY ASSURANCE

A. Conform to all requirements of Section 601 of the Uniform Standard Specifications for Public Work Construction by the Maricopa Association of Governments (MAG), as supplemented by the City of Chandler. If there is a conflict between MAG Standard Specifications and these Specifications, the Provisions of these Specifications shall govern.

B. Testing Services:
   1. General: Testing of materials, testing for moisture content during placement and compaction of fill materials, and of compaction requirements for compliance with technical requirements of the Specifications shall be performed by a testing laboratory as designated in Section 01452, Testing Laboratory Services Furnished by CONTRACTOR.
      a. CONTRACTOR'S Testing Service shall inspect and approve subgrades and fill layers before further construction Work is performed thereon.
      b. Responsibility belongs to CONTRACTOR to accomplish the specified compaction for backfill and to control the operations by confirmation tests to verify and confirm compliance, and is complying at all times, with the requirements of these Specifications concerning compaction, control, and testing.
      c. The frequency of CONTRACTOR'S confirmation tests shall be not less than as follows; each test location for trenches shall include tests for each layer, type, or class of backfill from bedding to finish grade.
         1) Trenches for buried pipe:
            a) In open fields: every 1,000 linear feet.
            b) Along dirt or gravel roads or off traveled right-of-way: every 500 linear feet.
            c) Crossing paved roads: along each crossing.
            d) Under pavement cuts or within two feet of pavement edges: every 400 linear feet.
      d. Copies of the test reports shall be submitted promptly to the ENGINEER. CONTRACTOR'S tests shall be performed by a soils testing laboratory acceptable to the ENGINEER.
      e. Demonstrate the adequacy of compaction equipment and procedures before exceeding any of the following amounts of earthwork quantities:
         1) 200 linear feet of trench backfill.
      f. Until the specified degree of compaction on the previously specified amounts of earthwork is achieved, no additional earthwork of the same kind shall be performed.
      g. Periodic compliance tests will be made by the ENGINEER to verify that compaction is conforming to the requirements previously specified, at no

cost to CONTRACTOR. Remove the overburden above the level at which the ENGINEER wishes to test and shall backfill and recompact the excavation after the test is complete.

h. If compaction fails to conform to the specified requirements, remove and replace the backfill at proper density or shall bring the density up to specified level by other means acceptable to the ENGINEER. Subsequent tests required to confirm and verify that the reconstructed backfill has been brought up to specified density shall be paid by CONTRACTOR. CONTRACTOR'S confirmation tests shall be performed in a manner acceptable to the ENGINEER. Frequency of confirmation tests for remedial Work shall be double that amount specified for initial confirmation tests.

C. Requirements of Regulatory Agencies:
1. Perform excavation Work in compliance with applicable requirements of governing authorities having jurisdiction.

D. Reference Standards: Comply with applicable provisions and recommendations of the following, except as otherwise shown or specified.
1. Excavation and Backfill:
   a. ASTM D 422, Standard Test Method for Particle-Size Analysis of Soils.
   b. ASTM D 427, Test Method for Shrinkage Factors of Soils by the Mercury Method.
   c. ASTM D 698, Standard Test Method for Laboratory Compaction Characteristics of Soil.
   d. ASTM D 1556, Standard Test Method for Density and Unit Weight of Soil in Place by the Sand-Cone Method.
   e. ASTM D 2166, Standard Test Method for Unconfined Compression Strength of Cohesive Soil.
   f. ASTM D 2922, Standard Test Methods for Density of Soil and Soil-Aggregate in Place by Nuclear Methods (Shallow Depth).
   g. ASTM D 3017, Standard Test Method for Water Content of Soil and Rock in Place by Nuclear Methods (Shallow Depth).
   h. ASTM D 4318, Method of Test for Liquid Limit of Soils.
   i. AISC Specifications for the Design, Fabrication, and Erection of Structural Steel for Buildings.
   j. OSHA Standard, Title 29, Code of Federal Regulations, Part 1926, Section .650 (Subpart P - Excavations).
   k. AASHTO T-99, The Moisture-Density Relations of Soils Using a (2.5 kg) 5.5 lb Rammer and a (305 mm) 12 in. Drop {Proctor}
   l. ASSHTO-T-191, Density of Soil in Place by the Sand Cone Method.
   m. Uniform Standard Specifications for Public Work Construction by the Maricopa Association of Governments (MAG), as supplemented by the City of Chandler.
2. Piping Materials and Installation:

a. ASTM D 2321, Practice for Underground Installation of Flexible Thermoplastic Pipe.
b. ASTM D 2774, Practice for Underground Installation of Thermoplastic Pressure Piping.
c. AWWA C111, Rubber-Gasket Joints for Ductile-Iron Pressure Pipe and Fittings.
d. AWWA C600, Installation of Ductile-Iron Water Mains and Their Appurtenances.
e. AWWA C651, Disinfecting Water Mains.
f. AWWA M11, Steel Pipe - A Guide for Design and Installation.
g. AWWA M23, PVC - Design and Installation.
h. ASCE MOP No. 37, Design and Construction of Sanitary and Storm Sewers.

## 1.3 SUBMITTALS

A. Shop Drawings: Submit for approval the following:
1. Excavation and Backfill Submittals:
a. Excavation Plan: Prior to start of excavation operations, a written plan shall be submitted to demonstrate compliance with OSHA Standard 29 CFR Part 1926.650. As a minimum, excavation plan shall include:
1) Name of competent person.
2) Excavation method(s) or protective system(s) to be used.
3) Copies of "manufacturer's data" or other tabulated data if protective system(s) are designed on the basis of such data.
b. Excavation and backfill requirements detailing sheeting and bracing, or other protective system(s), dewatering systems, cofferdams, and under-pinning.
c. Shop Drawings shall be prepared by a Registered Professional Engineer, licensed in the State of Arizona, recognized as an expert in the specialty involved. Drawings shall be submitted to ENGINEER for record purposes only. Calculations shall not be submitted. Drawing submittals will not be checked and will not imply approval by ENGINEER of the Work involved. Responsibility belongs to CONTRACTOR for designing, installing, operating and maintaining whatever system is necessary to satisfactorily accomplish all necessary sheeting, bracing, protection, underpinning and dewatering.
d. Samples of all materials, including select backfill, general backfill, granular embedment, crushed stone and sand shall be submitted to the ENGINEER and the testing service. Samples of the proposed material shall be submitted at least 14 days in advance of its anticipated use.
2. Piping Materials and Installation Submittals:
a. Full details of piping, specials, manholes, joints, harnessing and thrust blocks, and connections to existing piping, structures, equipment and appurtenances.

b. Certificates of compliance with referenced Standards for proposed pipe material.
c. Descriptions of proposed pipe testing methods, procedures and apparatus. Prepare and submit a report for each test conducted.

3. Field Test Reports:
   a. Testing laboratory shall submit copies of test reports for Field Density of Backfill directly to ENGINEER, with copy to CONTRACTOR
4. Record Drawings:
   a. During progress of the Work, keep an up-to-date set of Record Drawings showing field and Shop Drawing modifications.
   b. Submit Record Drawings prior to the time of Substantial Completion.

## 1.4 JOB CONDITIONS

A. Subsurface Information: Refer to General Conditions, and Supplementary Conditions for available data on subsurface conditions. The data is not intended as a representation or warranty of continuity of conditions between soil borings nor of groundwater levels at dates and times other than date and time when measured. OWNER will not be responsible for interpretations or conclusions drawn there from by CONTRACTOR. Data is solely made available for the convenience of CONTRACTOR.
   1. Additional test borings and other exploratory operations may be made by CONTRACTOR, at no additional cost to OWNER.

B. Existing Structures: The Drawings show certain surface and underground structures adjacent to the Work. This information has been obtained from existing records. It is not guaranteed to be correct or complete and is shown on the Drawings for the convenience of CONTRACTOR. Explore ahead of the required excavation to determine the exact location of all existing structures. Structures shall be supported and protected from damage by CONTRACTOR. If they are broken or damaged, restore them immediately at no additional cost to the OWNER.

C. Existing Utilities: Locate existing underground utilities in the areas of the Work. If utilities are to remain in place, provide adequate means of protection during all operations.
   1. Should uncharted or incorrectly charted piping or other utilities be encountered during excavation, consult piping or utility owner and ENGINEER immediately for directions as to procedure. Cooperate with OWNER and utility owner in keeping services and facilities in operation. Repair damaged utilities to satisfaction of utility owner. Comply with requirements of Section 01143, Coordination with OWNER'S Operations.
   2. In general, service lines to individual houses and businesses are not shown on the Drawings, however, assume that a service exists for each utility to each house or business.

3. Do not interrupt existing utilities serving facilities occupied and used by OWNER or others, except when permitted in writing by ENGINEER and then only after acceptable temporary utility services have been provided.
4. Demolish and completely remove from site existing underground utilities indicated to be removed. Coordinate with utility companies for shut-off of services if lines are active.

D. Use of Explosives:
1. The use of explosives will not be permitted.

E. Protection of Persons and Property: Barricade open excavations occurring as part of the Work and post with warning lights. Operate warning lights during hours from dusk to dawn each day and as otherwise required.
1. Protect structures, utilities, sidewalks, pavements, and other facilities from damage caused by settlement, lateral movement, undermining, washout and other hazards created by earthwork operations.

F. Roadways and Walks: Unless otherwise approved by ENGINEER, excavated material and materials of construction shall be so deposited, and the Work shall be so conducted, as to leave open and free for pedestrian traffic all crosswalks, and for vehicular traffic a roadway not less than ten feet in width. All hydrants, valves, fire alarm boxes, letter boxes, and other facilities which may require access during construction shall be kept accessible for use. During the progress of the Work, maintain such crosswalks, sidewalks, and roadways in satisfactory condition and the Work shall at all times be so conducted as to cause a minimum of inconvenience to public travel, and to permit safe and convenient access to private and public property along the line of the Work.

## 1.5 PRODUCT DELIVERY, STORAGE AND HANDLING

A. Deliver materials to the site to ensure uninterrupted progress of the Work.

B. Handle all pipe, fittings, specials and accessories carefully with approved handling devices. Do not drop or roll material off trucks. Do not otherwise drop, roll or skid piping.

C. Store pipes and fittings on heavy wood blocking or platforms so they are not in contact with the ground.

D. Unload pipe, fittings and specials opposite to or as close to the place where they are to be installed as is practical to avoid unnecessary handling. Keep pipe interiors completely free from dirt and foreign matter.

E. Inspect delivered pipe for cracked, gouged, chipped, dented or otherwise damaged material and immediately remove from site.

## PART 2 - PRODUCTS

### 2.1 EMBEDMENT AND BACKFILL MATERIALS

A. Pipe Bedding/Granular Embedment:
   1. Bedding is the material placed in the area from the bottom of the trench to one foot above the top of the pipe. Pipe bedding shall be Select Material Type B or Aggregate Base Course having the following gradation. Open graded rock will not be used without the written approval of the ENGINEER.

| Sieve Sizes (Square Opening) | Percentage by Weight Passing Sieve | |
|---|---|---|
| | Select Material Type B | Aggregate Base Course |
| 1-1/2-inch | 100 | |
| 1-1/4-inch | | 100 |
| No. 4 | 30 – 70 | 38 - 65 |
| No. 8 | 20 – 60 | 25 – 60 |
| No. 30 | 10 – 40 | 10 – 40 |
| No. 200 | 0 - 12 | 3 - 12 |

   2. Unless otherwise noted, the Plasticity Index as tested in accordance with AASHTO T-146, T-89 and T-90 shall not be more than five.

B. Sand:
   1. Sand for use as embedment material around plastic pipes (PVC) shall consist of natural or manufactured granular material.
   2. Sand material shall contain no organic material. Sand shall be nonplastic, when tested in accordance with ASTM D 698, 100 percent shall pass a 1/2-inch screen and no more than 20 percent shall pass a No. 200 screen.
   3. All material for sand must be tested and approved by the ENGINEER.
   4. No sand shall be placed without the approval of the ENGINEER.

C. Encasement Material:
   1. Pipe encasement material shall be Type 2 Portland cement concrete as specified in Section 03305, Concrete, unless otherwise shown on the Drawings.

D. Backfill Material:
   1. Materials acceptable for use as backfill above the pipe embedment shall be:
      a. Half-sack CLSM per MAG 728.
      b. All materials for use as backfill material shall be tested by the laboratory and approved by the ENGINEER.
      c. If on-site material is unsuitable as determined by the ENGINEER, select backfill or approved off-site fill shall be used.

## 2.2 PIPING MATERIALS

A. Unless otherwise specified, piping materials, including pipe, gaskets, fittings, connection and joint assemblies, linings and coatings, shall be selected from those listed in Section 15050, Piping Systems. Piping materials shall conform to detailed Specifications for each type of pipe and piping appurtenances specified in the applicable Sections of Division 15, Mechanical.

## 2.3 PIPING IDENTIFICATION

A. Plastic Tracer Tape and Magnetic Tracer Tape Marking shall conform to the requirements specified in Section 15050, Piping Systems.

# PART 3 – EXECUTION

## 3.1 EXCAVATION

A. Provide ENGINEER with sufficient notice and with means to examine the areas and conditions under which excavation is to be performed. ENGINEER will notify CONTRACTOR if conditions are found that may be detrimental to the proper and timely completion of the Work. Do not proceed with the Work until unsatisfactory conditions have been corrected in an acceptable manner.

B. Perform all excavation required to complete the Work as shown on the Drawings, specified and required. Excavations shall include earth, sand, clay, gravel, hardpan, boulders not requiring drilling and blasting for removal, decomposed rock, pavements, rubbish and all other materials within the excavation limits.

C. Excavations for pipelines shall be open excavations. Provide excavation protection system(s) required by ordinances, codes, law and regulations to prevent injury to workmen and to prevent damage to new and existing structures or pipelines. Unless shown on the Drawings or specified otherwise, protection system(s) shall be utilized under the following conditions.
   1. Excavation Less Than Five Feet Deep: Excavations in stable rock or in soil conditions where there is no potential for a cave-in may be made with vertical sides. Under all other conditions, excavations shall be sloped and benched, shielded, or shored and braced.
   2. Excavations More Than Five Feet Deep: Excavations in stable rock where there is no potential for a cave-in may be made with vertical sides. Under all other conditions, excavations shall be sloped and benched, shielded or shored and braced.
   3. Excavation protection system(s) shall be installed and maintained in accordance with drawings submitted under Article 1.3, above.

D. Where the pipeline is to be placed below the ground water table, well points, cofferdams or other acceptable methods shall be used to permit construction of said pipeline under dry conditions. Dry conditions shall prevail until the pipelines are properly jointed, tested and backfilled. Water level shall be maintained below top of backfill at all times.

E. Pumping of water from excavations shall be done in such a manner to prevent the carrying away of unsolidified concrete materials, and to prevent damage to the existing subgrade.

F. Except where otherwise noted on the Drawings, or approved, in writing, by the ENGINEER, no more than 500 feet of trench may be opened in advance of pipe laying.

G. Material Storage: Stockpile satisfactory excavated materials in approved areas, until required for backfill or fill. Place, grade and shape stockpiles for proper drainage.
   1. Locate and retain soil materials away from edge of excavations.
   2. Dispose of excess soil material and waste materials as specified hereinafter.
   3. Stockpiled excavated soils for use as subsequent fill shall be classified by laboratory as on-site granular or sandy clay soils. Use and placement of fill shall be performed as specified for each class.
   4. Excess soil from excavations shall be disposed of off-site. Disposal shall be in accordance with state and local regulatory requirements

H. Trench width shall be minimized to greatest extent practical but shall conform to the following:
   1. Sufficient to provide room for installing, jointing and inspecting piping. Trenches for other than cast-in-place concrete pipe shall conform to the dimensions listed below, unless otherwise shown on the Drawings, and/or approved by the ENGINEER.

| Size of Pipe (I.D.) (Inches) | Maximum Width at Top of Pipe Greater than O.D. of Barrel | Minimum Width at Springline Each Side of Pipe |
|---|---|---|
| Less than 18 | 16-inches | 6-inches |
| 18 to 24 inclusive | 19-inches | 8-inches |
| 27 to 39 inclusive | 22-inches | 9-inches |
| 42 to 60 inclusive | 1/2 of Pipe O.D. | 12-inches |
| Over 60 | 36-inches | 12-inches |

   2. The width of the trench shall not be greater than the maximum indicated above, at and below the level of the top of the pipe. If the maximum width as specified above is exceeded at the top of the pipe, provide, at no additional cost to the OWNER, the necessary loading bearing capacity by means of bedding, having a

higher bedding factor that that specified, higher strength pipe a concrete cradle, cap or encasement, or by other means approved in writing by the ENGINEER.

3. The width of the trench above that level may be made as wide as necessary for shoring or other wall support measures necessary for a safe and proper installation. Trench walls may be sloped in-lieu of shoring, sheeting or other wall support measures. In all cases, responsibility belongs to CONTRACTOR for all costs incurred as a result of increased trench width.
4. Enlargements at pipe joints may be made if required and approved by ENGINEER.
5. Sufficient for shoring and bracing, or shielding and dewatering.
6. Sufficient to allow thorough compaction of embedment material adjacent to bottom half of pipe.

I. Depth of trench shall be as required to install the piping at the elevations shown on the Drawings. For all pipe 12-inches or greater in diameter, excavate for and provide an initial granular bedding at least 4-inches thick or 1/2 the outside diameter of the pipe whichever is greater. The bedding material shall be placed at a uniform density with a minimum compaction density of 95 percent as determined by AASHTOT -99 and T-191 or ASTM D-2922 and D-3017. If required and approved by ENGINEER, depths may be revised. Remove all loose and unsuitable material from the trench bottom.

J. Subgrades for trench bottoms shall be firm, dense, and thoroughly compacted and consolidated; shall be free from mud, muck, and other soft or unsuitable materials; and shall remain firm and intact under all construction operations. Where ENGINEER considers the existing subgrades unsuitable, remove same and replace it with granular embedment material. Subgrades which are otherwise solid, but which become soft or mucky on top due to construction operations, shall be reinforced with granular embedment material. The finished elevation of stabilized subgrades shall not be above subgrade elevations required for the piping installation as herein specified. Proof roll all subgrades prior to placing of select fill and general fill material.

K. Except at locations where excavation of rock from the bottom of the trench is required, care shall be taken not to excavate below the required depth. Unauthorized excavation below the specified grade line shall be refilled at CONTRACTOR'S expense with aggregate base material compacted to a uniform density of not less than 95 percent of the maximum density as determined by AASHTO T-99 and T-191 or ASTM D-2922 and D-3017. When AASHTO T-99, Method A or B, and T-191 are used for density determination, MAG, Detail 190, will be used for rock correction.

L. Whenever rock is encountered in the trench bottom, it shall be over excavated to a minimum depth of 6-inches below the O.D. of the pipe. This over excavation shall be filled with granular embedment material and compacted to a uniform density of not less than 95 percent of the maximum density as determined by AASHTOT-99 and T-191 or ASTM D-2922 and D-3017.

M. Where pipe is laid in rock excavation, crushed stone as specified in Section 02318, Crushed Stone and Gravel, shall be carefully placed and tamped over the rock before the pipe is laid. Depth of crushed stone shall be at least 6-inches for pipe 16-inches and smaller and 9-inches for pipe 18-inches and larger. After laying pipe, the balance of the embedment and backfill shall be placed as described herein.

## 3.2 EXCAVATION DRAINAGE AND DEWATERING

A. General:
   1. Prevent surface and subsurface water from flowing into excavations and from flooding adjacent areas.
   2. Remove water from excavations as fast as it collects.
   3. Maintain the ground water level at approximately three feet below the bottom of the excavation to provide a stable surface for construction operations, a stable subgrade for permanent work and to prevent damage to Work during all stages of construction.
   4. Provide and maintain pumps, sumps, suction and discharge lines and other dewatering system components necessary to convey water away from excavations. Adequate operational standby equipment shall be maintained on the site.
   5. Provide approved sediment traps when water is conveyed into water courses.
   6. Obtain ENGINEER'S approval before shutting down dewatering system for any reason.

B. Standby Requirements for Dewatering:
   1. Provide standby equipment to ensure continuity of dewatering operations.

C. Disposal of Water Removed by Dewatering System:
   1. Dispose of all water removed from the excavation in such a manner as not to endanger public health, property, or any portion of the Work under construction or completed.
   2. Dispose of water in such a manner as to cause no inconvenience to OWNER, ENGINEER or others involved in work about the site.
   3. Convey water from the excavation in a closed conduit. Do not use trench excavations as temporary drainage ditches.

## 3.3 PIPE BEDDING/GRANULAR EMBEDMENT

A. Bedding/Granular Embedment shall be placed in the trench from the bottom of the trench to one foot above the top of the pipe.

B. Carefully place and thoroughly compact all pipe bedding with hand held pneumatic compactors as construction progresses.

C. Granular embedment shall be spread and the surface graded to provide a uniform and continuous support beneath the pipe at all points between bell holes or pipe joints. It will be permissible to slightly disturb the finished subgrade surface by withdrawal of pipe slings or other lifting tackle. After each pipe has been graded, aligned, placed in final position on the bedding material and shoved home, sufficient pipe embedment material shall be deposited and compacted under and around each side of the pipe and back of the bell or end thereof to hold the pipe in proper position and to maintain alignment during subsequent pipe jointing and embedment operations. Embedment material shall be deposited and compacted uniformly and simultaneously on each side of the pipe to prevent lateral displacement.

## 3.4 PIPE INSTALLATION

A. General:
1. All bedding shall be inspected by ENGINEER prior to laying pipe. Notify ENGINEER in advance of excavating, bedding and pipe laying operations.
2. The ENGINEER prior to installation shall inspect all piping. ENGINEER'S inspection will not relieve CONTRACTOR or manufacturer from responsibility for damaged products.
3. All piping shall be carefully examined for cracks, damage or other defects before installation. Any piping that is defective, including but not limited to, cracked, damaged, in poor condition, or with damaged linings or improper markings shall be rejected, unless the product can be repaired in a manner acceptable to the manufacturer and ENGINEER. Any piping found to be broken or defective after it has been installed shall be removed, replaced or repaired at CONTRACTOR'S expense.
4. Take field measurements, where required, prior to installation to ensure proper fitting of the Work. Uncover existing pipelines sufficiently in advance of the proposed Work in order that the type and location of the existing pipes and joints and other information required to fabricate the proposed piping can be determined. Responsibility to obtain whatever information is required to complete the connections of the proposed pipelines to the existing pipelines belongs to CONTRACTOR.
5. Present all conflicts between piping systems and equipment, structures or facilities to ENGINEER for determination of corrective measures before proceeding.
6. Request instructions from ENGINEER before proceeding if there is a conflict between the manufacturer's recommendations and the Contract Documents.
7. Installation of all pipe, fittings, valves, specials and appurtenances shall be subject to the review and approval of the ENGINEER.
8. Install piping as shown on the Drawings, specified and as recommended by the manufacturer and in conformance with referenced standards and approved Shop Drawings.
9. No pipe shall be brought into position until the preceding length has been bedded and secured in its final position.

10. Minimum earth cover over the piping shall be as shown on the Drawings, specified or directed by the ENGINEER, but in no case shall the earth cover be less than 4 feet for all piping, except drains.
11. Interior of all piping and mating surfaces shall be inspected and all dirt, gravel, sand, debris or other foreign material shall be completely removed from the interior and mating surfaces before installation. Measures shall be taken to maintain the interior of all piping clean until acceptance of the completed Work. Care shall be taken to prevent foreign matter from entering joint space. Bell and spigot mating surfaces shall be wiped clean immediately before piping is laid. For ductile-iron pipe, the bell and spigot mating surfaces shall be thoroughly cleaned with a wire brush.
12. Install piping accurately to line and grade shown on the Drawings, specified or directed, unless otherwise approved by the ENGINEER. Accurate means of determining and checking the alignment and grade shall be used, which shall be subject to the approval of the ENGINEER. Any modifications to the Contract Documents to suit the pipe manufacturer's standard shall be approved by the ENGINEER. Remove and relay piping that is incorrectly installed, at CONTRACTOR'S expense.
13. Do not lay piping in water, unless otherwise specified in these Specifications or approved by the ENGINEER. Ensure that the water level in the trench is at least 6-inches below the bottom of piping. Maintain a dry trench until jointing and backfilling are complete, unless otherwise specified in these Specifications or approved by the ENGINEER.
14. Where unforeseen conditions will not permit the installation of piping as shown on the Drawings or specified, no piping shall be installed without approval of the ENGINEER. Do not modify structures or facilities without approval of the ENGINEER.
15. Start laying piping at lowest point and proceed toward the higher elevations, unless otherwise approved by the ENGINEER. Slope piping uniformly between elevations shown on the Drawings or as otherwise directed by the ENGINEER.
16. Place bell and spigot piping so that the bells face the direction of laying, unless otherwise approved by the ENGINEER.
17. Piping shall be installed so that the barrel of the piping, and not the joints, receives the bearing pressure from the trench bottom or other bedding condition.
18. No piping shall be brought into position until the preceding length, valve, fitting, or special has been bedded and secured in place.
19. Whenever pipe laying is not actively in progress, the open ends of the piping shall be closed by a temporary plug or cap to prevent soil, water and other foreign matter from entering the piping.
20. Field cutting of metallic piping, where required for inserting valves, fitting, specials, and closures, shall be made with a machine specially designed for cutting piping and in accordance with the manufacturer's instructions. Cuts shall be carefully done, without damage to piping, so as to leave a smooth end at right angles to the axis of the piping. Cut end shall be tapered and sharp edges filed off smooth. Flame cutting shall not be permitted. Any piping damaged by

CONTRACTOR due to improper or careless methods of cutting shall be replaced or repaired at his expense.

21. Blocking under piping shall not be permitted, unless specifically approved by ENGINEER for special conditions.
22. Protective linings and coatings shall be touched up prior to installation, where required.
23. Except where bends, wyes or similar fittings are used, changes in alignment and grade of the piping shall be made by deflecting joints or with beveled pipe. Permissible joint deflection shall not exceed 75 percent of the amount allowed by the manufacturer.
24. All joints shall be made in the presence of the ENGINEER or his duly authorized representative, except as otherwise approved.
25. Special care shall be taken to ensure that each section of piping abuts against the next in such a manner that there will be not shoulder or unevenness of any kind along the piping invert.
26. Piping shall be rotated as required to place outlets in proper position.
27. Blind flanges and cleanouts shall be provided at locations shown on the Drawings, specified or required. Cleanouts on buried piping shall include all pipe, fittings and appurtenances required to bring cleanout to finished grade and terminate in a flange and blind flange or suitably capped piping as shown on the Drawings. Cleanout piping shall be same as that specified for the main run.
28. All gravity lines shall pitch uniformly at the grade shown on the Drawings or as specified or approved by the ENGINEER.
29. Short pipe stubs, maximum 4-feet-0-inch in length, shall be used at all manholes and other wall faces, except as otherwise specified.
30. Field painting shall be accomplished after joints are made.
31. All piping shall be plugged watertight with a suitable cap or plug securely fastened to the end of the piping at all contact interfaces.
32. On steep slopes, take measures acceptable to ENGINEER to prevent movement of the pipe during installation.
33. Thrust Restraint: During the installation of the pipe, thrust blocks, tied joints, or proprietary restrained joint systems shall be provided wherever required for thrust restraint. Thrust restraint shall conform to the applicable requirements of Article 3.4, below.
34. Exercise care to avoid flotation when installing pipe in cast-in-place concrete.
35. For copper tubing and thermoplastic piping, snake piping in trench to compensate for thermal expansion.

B. Manufacturer's Installation Specialist:
   1. Provide the services of a competent installation specialist of the pipe manufacturer when pipe laying commences if CONTRACTOR is not experienced in laying and jointing a particular type of pipe for the following:
      a. Concrete pipe.
      b. FRP pipe.
      c. Thermoplastic pipe.
      d. Centrifugally cast, fiberglass-reinforced polymer mortar pipe.

2. Retain installation specialist at the site for a minimum of three (3) days or until competency of the pipe laying crew has been satisfactorily demonstrated.

C. Separation of Sewers and Potable Water Pipe Lines:
1. Conform to requirements of MAG Specification Section 610.5

D. Plugs:
1. Temporarily plug installed pipe at the end of each day's Work or other interruption to the installation of any pipeline. Plugging shall prevent the entry of animals, liquids or persons into the pipe or the entrance or insertion of deleterious materials.
2. Install standard plugs into all bells at dead ends, tees or crosses. Cap all spigot ends.
3. Fully secure and block all plugs and caps installed for pressure testing to withstand the specified test pressure.
4. Where plugging is required for phasing of the Work or for subsequent connection of piping, install watertight, permanent type plugs.

E. Laying Pipe:
1. Conform to manufacturer's instructions and requirements of the standards listed below, where applicable:
   a. Ductile Iron Pipe: AWWA C600, AWWA C105.
   b. Thermoplastic Pipe: ASTM D 2774.
   c. ASCE Manual of Practice No. 37.

F. Polyethylene Encasement:
1. Provide polyethylene encasement for ductile iron piping to prevent contact between the pipe and surrounding bedding material and backfill.
2. Polyethylene may be supplied in tubes or in sheet material.
3. Polyethylene encasement materials and installation shall be in accordance with the requirements of MAG Section 610.5.

G. Jointing Pipe:
1. Ductile Iron Mechanical Joint Pipe:
   a. Comply with requirements of Section 15101, Ductile Iron Pipe.
   b. Wipe clean the socket, plain end and adjacent areas immediately before making joint. Make certain that cut ends are tapered and sharp edges are filed off smooth.
   c. Lubricate the plain ends and gasket with soapy water or an approved pipe lubricant, in accordance with AWWA C111, just prior to slipping the gasket onto the plain end of the joint assembly.
   d. Place the gland on the plain end with the lip extension toward the plain end, followed by the gasket with the narrow edge of the gasket toward the plain end.
   e. Insert the pipe into the socket and press the gasket firmly and evenly into the gasket recess. Keep the joint straight during assembly.

f. Push gland toward socket and center it around pipe with the gland lip against the gasket.
g. Insert bolts and hand tighten nuts.
h. Make deflection after joint assembly, if required, but prior to tightening bolts. Alternately tighten bolts 180 degrees apart to seat the gasket evenly. The bolt torque shall be as follows:

| Pipe Size (inches) | Bolt Size (inches) | Range of Torque (ft-lbs) |
|---|---|---|
| 3 | 5/8 | 45 to 60 |
| 4 to 24 | 3/4 | 75 to 90 |
| 30 to 36 | 1 | 100 to 120 |
| 42 to 48 | 1-1/4 | 120 to 150 |

i. All bolts and nuts shall be heavily coated with two 10-mil minimum coats of coal-tar epoxy coating as manufactured by Tnemec, or equal.
j. Restrained mechanical joints shall be in accordance with Section 15101, Ductile Iron Pipe.

2. Ductile Iron Push-On Joint Pipe:
   a. Comply with requirements of Section 15101, Ductile Iron Pipe.
   b. Prior to assembling the joints, the last 8-inches of the exterior surface of the spigot and the interior surface of the bell shall be thoroughly cleaned with a wire brush, except where joints are lined or coated with a special protective lining or coating.
   c. Rubber gaskets shall be wiped clean and flexed until resilient. Refer to manufacturer's instructions for procedures to ensure gasket resiliency when assembling joints in cold weather.
   d. Insert gasket into joint recess and smooth out the entire circumference of the gasket to remove bulges and to prevent interference with the proper entry of the spigot of the entering pipe.
   e. Immediately prior to joint assembly, apply a thin film of approved lubricant to the surface of the gasket which will come in contact with the entering spigot end of pipe. Option, apply a thin film of lubricant to the outside of the spigot of the entering pipe.
   f. For assembly, center spigot in the pipe bell and push pipe forward until it just makes contact with the rubber gasket. After gasket is compressed and before pipe is pushed or pulled all the way home, carefully check the gasket for proper position around the full circumference of the joint. Final assembly shall be made by forcing the spigot end of the entering pipe past the rubber gasket until it makes contact with the base of the bell. When more than a reasonable amount of force is required to assemble the joint, the spigot end of the pipe shall be removed to verify the proper positioning of the rubber gasket. Gaskets which have been scoured or otherwise damaged shall not be used.

g. Maintain an adequate supply of gaskets and joint lubricant at the site at all times when pipe jointing operations are in progress.

3. Proprietary Joints:
   a. Pipe which utilizes proprietary joints such as Megalug, by EBBA Iron, Inc.; Lok-Ring, by American Cast Iron Pipe Company; restrained joints described under Article 3.4, or other such joints shall be installed in strict accordance with the manufacturer's instructions.
4. Flanged Joints:
   a. Assemble flanged joints using 1/8-inch ring-type gaskets for raised face flanges. Use full face gaskets for flat face flanges, unless otherwise approved by ENGINEER. Gaskets shall be suitable for the service intended in accordance with the manufacturer's ratings and instructions. Gaskets shall be properly centered.
   b. Bolts shall be tightened in a sequence which will ensure equal distribution of bolt loads.
   c. The length of bolts shall be uniform, and they shall not project beyond the nut more than 1/4-inch or fall short of the nut when fully taken up. The ends of bolts shall be machine cut so as to be neatly rounded. No washers shall be used.
   d. Bolt threads and gasket faces for flanged joints shall be lubricated prior to assembly.
   e. After assembly, coat all bolts and nuts with two 8-mil coats of a high-build epoxy or bituminous coating as manufactured by Tnemec, or equal.
5. Thermoplastic Pipe Joints:
   a. Push-On Joints:
      1) Bevel all field-cut pipes, remove all burrs and provide a reference mark the correct distance from the pipe end.
      2) Clean the pipe end and the bell thoroughly before making the joint. Insert the O-ring gasket, making certain it is properly oriented. Lubricate the spigot well with an approved lubricant; do not lubricate the bell or O-ring. Insert the spigot end of the pipe carefully into the bell until the reference mark on the spigot is flush with the bell.
6. Copper Tubing Joints:
   a. Assemble copper tubing with soldered joints. Solder shall be 95-5 tin-antimony solder conforming to ASTM B 32.
   b. Ream or file pipe to remove burrs.
   c. Clean and polish contact surfaces of joints.
   d. Apply flux to both male and female ends.
   e. Insert end of tube into full depth of fitting socket.
   f. Heat joint evenly.
   g. Form continuous solder bead around entire circumference of joint.
   h. Runs shall contain unions at connection to equipment and at reasonable distances along the lengths of runs to permit convenient disassembly of piping and removal of equipment.
7. Mechanical Coupling Joints:

a. Prior to the installation and assembly of mechanical couplings, the joint ends shall be cleaned thoroughly with a wire brush to remove foreign matter. Following this cleaning, lubricant shall be applied to the rubber gasket or inside of the coupling housing and to the joint ends. After lubrication, the gasket shall be installed around the joint end of the previously installed piece and the joint end of the subsequent piece shall be mated to the installed piece. The gasket shall be positioned and the coupling housing placed around the gasket and over the grooved or shouldered joint ends. The bolts shall be inserted and the nuts screwed up tightly by hand. The bolts shall then be tightened uniformly in order to produce an equal pressure on all parts of the housing. When the housing clamps meet metal to metal, the joint is complete and further tightening is not required.

8. Refer to Section 15102, Steel Pipe – Lined and Coated

H. Connections to Valves and Hydrants:
1. Install valves and hydrants as shown on the Drawings. Valves shall be located in such a way that they are accessible for repair and removal in the future.
2. Provide suitable adapters when valves or hydrants and piping have different joint types.
3. Provide thrust restraint at all hydrants and at valves at pipeline terminations.

I. Transitions from One Type of Pipe to Another:
1. Provide all necessary adapters, specials and connection pieces required when connecting different types and sizes of pipe or connecting pipe made by different manufacturers.

J. Closures:
1. Provide all closure pieces shown on the Drawings or required to complete the Work.

## 3.5 THRUST RESTRAINT

A. Provide thrust restraint on all pressure piping systems and where otherwise shown on the Drawings and specified.

B. Thrust restraint shall be accomplished by means of restrained pipe joints. Concrete thrust blocks shall be used only when specifically shown on the Drawings or as directed by the ENGINEER. Thrust restraints shall be designed for the axial thrust exerted by the test pressure for each piping system as specified in Section 15050, Piping Systems.

C. Restrained Pipe Joints:
1. Pipe joints shall be restrained by means suitable to the type of pipe being installed.

a. Ductile-iron push on joints and mechanical joints shall be restrained utilizing a proprietary restrained joint system such as American Lok-Ring, Ebba Iron, Inc., Series 1100 Megalug, U.S. Pipe TR Flex System, lugs, and tie rods, or other system approved by ENGINEER.
b. Thermoplastic and copper piping shall generally be installed with soldered, solvent weld, threaded, flanged, or similar type joints. Where push-on type or other non-restrained joints are used, provide tie rods or other suitable joint restraint system for these joints, subject to the approval of ENGINEER.
c. Harnessed lengths for buried pipe shall be determined by the pipe manufacturer in accordance with the formula for determination of buried pipe harnessed lengths located at the end of this Section.

## 3.6 BACKFILL

A. General
1. Backfill begins after the placement of the pipe bedding/granular embedment. Pipeline trenches may be backfilled prior to pressure testing, but no structure shall be constructed over any pipeline until it has been tested.
2. Place and compact backfill as construction progresses.
3. Compacted backfill shall be required for the full depth of the trench above the granular pipe embedment material. Where the trench for one pipe passes beneath the trench for another pipe or electrical duct bank, the lower trench shall be compacted to the level of the bottom of the upper trench.
4. Each layer of backfill material shall be compacted by at least two complete coverages of all portions of the surface of each lift using approved compaction equipment. One coverage is defined as the conditions reached when all portions of the fill lift have been subjected to the direct contact of the compacting surface of the compactor.
5. The method of compaction and the equipment used shall be appropriate for the material to be compacted and shall not transmit damaging shocks to the pipe.
6. The degree of compaction required for all types of fills shall be as listed below. Material shall be moistened or aerated as necessary to provide the moisture content that will facilitate obtaining the specified compaction.
7. The trench backfill shall be thoroughly compacted to no less than the following densities when tested and determined by ASSHTO T-99 and T-191 or ASTM D 2922 and D 3017. When ASSHTO T-99, Method A or B, and T-191 are used for density determination, MAG Detail 190 will be used for rock correction. The minimum density required is identified below:

| Material Thick. (in) | Required Minimum Density-Percent Compaction (ASTM D 698) | Maximum Uncompacted Lift (inches) |
|---|---|---|
| Aggregate Base Course: | | |

| | | |
|---|---|---|
| Below asphalt paving | 100 | 8 |
| Trench Backfill above pipe: | 95 | 12 |
| Granular Pipe Embedment Material: | 100 | 6 |
| Sand Embedment Material: | 95 | 6 |

All fill must be wetted and thoroughly mixed to achieve optimum moisture content, ± three percent, with the following exceptions: On site clayey soils optimum to plus three percent.

Natural undisturbed soils or compacted soil subsequently disturbed or removed by construction operations shall be replaced with materials compacted as specified above.

## 3.7 GRADING

A. General: Uniformly grade areas within limits of grading shown on the Drawings or specified, including adjacent transition areas. Smooth subgrade surface within specified tolerances, compact with uniform levels or slopes between points where elevations are shown on the Drawings, or between such points and existing grades.

B. Turfed Areas: Finish areas to receive topsoil to within not more than 1-inch above or below the required subgrade elevations.

C. Walks: Shape surface of areas under walks to line, grade and cross-section, with finish surface not more than 1-inch above or below the required subgrade elevation.

D. Pavements: Shape surface of areas under pavements to line, grade and cross-section, with finish surface not more than 1/2-inch above or below the required subgrade elevation.

E. Slabs: Grade smooth and even, free of voids, compacted as specified, and to required elevation. Provide final grades within a tolerance of 1/2-inch when tested with a 10-foot straightedge.

F. Compaction: After grading, compact subgrade surfaces to the depth and percentage of maximum density required.

## 3.8 PAVEMENT SUBBASE COURSE

A. General: Place subbase material, in layers of specified thickness, over ground surface to support pavement base course.

B. Grade Control: During construction, maintain lines and grades including crown and cross-slope of subbase course.

C. Shoulders: Place shoulders along edges of subbase course to prevent lateral movement. Construct shoulders of acceptable soil materials, placed in such quantity to compact to thickness of each subbase course layer. Compact and roll at least a 12-inch width of shoulder simultaneously with compacting and rolling of each layer of subbase course.

D. Placing: Place subbase course material on prepared subgrade in layers of uniform thickness, conforming to indicated cross-section and thickness. Maintain optimum moisture content for compacting subbase material during placement operations.
   1. When a compacted subbase course is shown on the Drawings to be 6-inches thick or less, place material in a single layer. When shown on the Drawings to be more than 6-inches thick, place material in equal layers, except no single layer more than 6-inches or less than 3-inches in thickness when compacted.

## 3.9 DISPOSAL OF EXCAVATED MATERIALS

A. Material removed from the excavations which does not conform to the requirements for fill or is in excess of that required for backfill shall be hauled away by CONTRACTOR and disposed of in compliance with municipal, county, state, federal or other applicable regulations at no additional cost to OWNER.

## 3.10 RESTORING AND RESURFACING EXISTING ROADWAYS AND FACILITIES

A. Place 1-1/2 inches of temporary bituminous pavement immediately after backfilling trenches in paved roadways. Maintain the surface of the paved area over the trench in good and safe condition during progress of the entire Work, and promptly fill all depressions over and adjacent to the trench caused by settlement of backfill. Immediately prior to constructing the permanent paving and base, remove and dispose of temporary pavement. Permanent replacement pavement shall be equal to that of the existing roadways unless otherwise shown on the Drawings or specified.

B. Pavement, gutters, curbs, walks, driveways and roadways disturbed or damaged by CONTRACTOR'S operations, except areas designated "New Pavement" or "Proposed Pavement", shall be restored or replaced at CONTRACTOR'S expense to as good condition as they were previous to the commencement of the Work and in accordance with applicable local and state highway specifications.

## 3.11 WORK AFFECTING EXISTING PIPING

A. Location of Existing Piping:
   1. Locations of existing piping shown on the Drawings should be considered approximate.
   2. Determine the true location of existing piping to which connections are to be made, and location of other facilities which could be disturbed during earthwork

operations, or which may be affected by CONTRACTOR'S Work already installed.

3. Conform to applicable requirements of Division 1, General Requirements, pertaining to cutting and patching, and connections to existing facilities.

B. Taking Existing Pipelines Out of Service:
   1. Do not take pipelines out of service unless specifically listed below, or approved by ENGINEER.
      a. Refer to Section 01143, Coordination with OWNER'S Operations.
   2. Notify ENGINEER at least 48 hours prior to taking any pipeline out of service.

C. Work on Existing Pipelines:
   1. Cut or tap pipes as shown on the Drawings or required with machines specifically designed for this Work. All taps shall be made at the spring line except for air release taps. Taps to buried piping 16-inches in diameter and larger shall be protected by an access vault to the surface or shall be 4-inches larger, with a shut off ball valve and a riser to the surface. Taps made to pipe smaller than 16-inches may be 2-inch taps. Taps shall not be located under slabs.
   2. Install temporary plugs to prevent entry of mud, dirt, water and debris.
   3. Provide all necessary adapters, fittings, pipe and appurtenances required to complete the Work.
   4. Existing pipelines which are cut and abandoned shall be adequately capped or filled with grout.

## 3.12 TESTING OF PIPING

A. General:
   1. Test all piping, except as otherwise authorized by ENGINEER.
   2. Notify ENGINEER and local authorities having jurisdiction at least 48 hours in advance of testing if their presence is required.
   3. Conduct all tests in the presence of the ENGINEER.
   4. Remove or protect any pipeline-mounted devices which may be damaged by the test pressure.
   5. Provide all apparatus and services required for testing, including but not limited to, the following:
      a. Test pumps, bypass pumps, hoses, calibrated gauges, meters, test containers, valves and fittings.
      b. Temporary bulkheads, bracing, blocking and thrust restraints.
   6. Provide air if an air test is required and power if pumping is required.
   7. Unless otherwise specified, OWNER will provide fluid required for testing.
   8. Repair and retest pipelines that fail to hold specified test pressure or which exceed the allowable leakage rate.
   9. Unless otherwise noted, pipelines shall hold specified test pressure for two hours.

10. Unless otherwise specified, test pressures required are at the lowest elevation of the pipeline section being tested.

B. Schedule of Pipeline Tests:
1. Refer to Section 15050, Piping Systems, for the type of test required and the required hydrostatic test pressure.
2. Unless otherwise specified, the required hydrostatic test pressures are at the lowest elevation of the pipeline.
3. For piping not listed in Section 15050, Piping Systems:
   a. Hydrostatically test pipe that will be operating at a pressure greater than five psig.
   b. Use exfiltration testing or low-pressure air testing for all other piping.
4. Hydrostatic Test Pressure:
   a. Use test pressures listed in Section 15050, Piping Systems.
   b. If a test pressure is not listed in Section 15050, Piping Systems, or if a hydrostatic test is required for piping not listed in Section 15050, Piping Systems, the test pressure will be determined by the ENGINEER based on the maximum anticipated sustained operating pressure and the methods described in the AWWA Manual or Standard which applies to the piping system.

C. Hydrostatic Testing:
1. Preparation for Testing:
   a. For plastic pipe, including fiberglass pipe, follow procedures described in Section 7 of AWWA Standard C605.
   b. For all other piping follow procedures described in AWWA Manual M9 except that the minimum wetting period required immediately prior to testing for cement-lined steel pipe and asbestos cement pipe shall be 24 hours rather than the 48 hours prescribed for concrete pipe. A wetting period is not required for metal pipe that is not cement-lined or for plastic pipe.
   c. Ensure that adequate thrust protection is in place and that all joints are properly installed.

2. Test Procedure:
   a. Complete backfill and compaction at least to the pipe centerline before testing, unless otherwise required or approved by ENGINEER.
   b. Allow concrete for thrust blocks to reach design strength before testing.
   c. Fill pipeline slowly to minimize air entrapment and surge pressures. Fill rate should not exceed one foot per second in the pipe being tested. Install corporation cocks, if necessary, to remove all air.
   d. Examine exposed joints and valves, and correct visible leakage.
   e. After the wetting period prescribed above, add fluid to pressurize line to the required test pressure. Maintain test pressure for a stabilization period of ten minutes before beginning test.

f. After the stabilization period, maintain test pressure for the duration specified in Section 15050, Piping Systems. Add fluid to restore test pressure if pressure drops five psi below test pressure at any time during the test period.
g. Pump from a test container to maintain test pressure. Measure the volume of fluid pumped from the container and record on the test report. Record pressure at the test pump at 15 minute intervals for the duration of the test.

3. Allowable Leakage Rates:
   a. Conduct leakage test for all liquid piping after satisfactory completion of pressure test.
   b. Allow concrete pipe to stand full of water at least 12 hours prior to starting leakage test.
   c. Maintain test pressure constantly for the minimum test period and accurately measure the amount of water which must be added to maintain the test pressure.
   d. Allowable Leakage Rates (in gallons per hour per 1,000 feet per inch diameter):
      1) DIP Push On or Mechanical Joints: 0.075.
      2) Centrifugally Cast, Fiberglass -Reinforced Polymer Mortar Pipe: 0.0.

## 3.13 DISPOSAL OF WATER

A. Provide suitable means for disposal of test and flushing water so that no damage results to facilities or waterways.

B. Means of disposal of test and flushing water shall be subject to the approval of ENGINEER, local governing authorities and regulatory agencies.

C. Responsibility belongs to CONTRACTOR for any damage caused by water disposal operations.

## 3.14 CLEANING AND DISINFECTION

A. Cleaning:
   1. Thoroughly clean all piping and flush in a manner approved by ENGINEER, prior to placing in service.
   2. Piping 24-inches in diameter and larger shall be inspected from inside and all debris, dirt and foreign matter removed.
   3. If piping which requires disinfection has not been kept clean during storage or installation, swab each section individually before installation with a five percent hypochlorite solution, to ensure clean piping.

## 3.15 INSTALLATION OF DETECTABLE PIPE LOCATING TAPE

A. Underground Pipe Locating Tape:
   1. Refer to paragraph 2.3.A of this Section, and Section 15050, Piping Systems.
   2. Detectable pipe locating tape shall be placed above all underground pipelines. Tape shall be buried 12-inches below finished grade directly above entire pipeline length.
   3. Detectable pipe locating tape for reuse water shall be buried on top and in contact with the pipe in addition to 12-inches below finished grade.

FORMULA FOR DETERMINATION
OF BURIED PIPE
HARNESSED LENGTHS

Lengths shall be based on the following:

Harnessed Length (L) on each side of bend $= \dfrac{T}{f \sum W}$

$T = 1.25\ PA \sin \Delta/2$

$T$ = Thrust (lbs)

$P$ = Test Pressure (psi), refer to Section 15050, Piping Systems.

$A$ = Pipe Area (sq.in.)

$\Delta$ = Angle of Bend

$f$ = friction factor between soil and pipe = 0.3*

$\sum W = W_p + W_s + W_w$

$W_p$ = weight pipe (pounds per linear foot-PLF)

$W_s$ = weight soil (PLF)**

$W_w$ = weight fluid (PLF)

* For ductile iron and steel pipe: friction factor = 0.1.

** Based on depth of cover on pipe, and outside diameter of pipe. Soil weight = 100 pcf.

++ END OF SECTION ++

# SECTION 15052

# EXPOSED PIPING INSTALLATION

## PART 1 - GENERAL

### 1.1 DESCRIPTION

A. Scope:
   1. Provide all labor, materials, equipment and incidentals as shown on the Drawings, specified and required to furnish and install and test all exposed piping, fittings, and specials. The Work includes, but is not limited to, the following:
      a. All types and sizes of exposed piping, except those specified under other Sections.
      b. Piping embedded in concrete within a structure or foundation will be considered as exposed and included herein.
      c. Supports, restraints, thrust blocks and other anchors.
      d. Work on or affecting existing piping.
      e. Testing.
      f. Cleaning and disinfecting.
      g. Installation of all jointing and gasketing materials, specials, flexible couplings, mechanical couplings, harnessed and flanged adapters, sleeves, tie rods, and all other Work required to complete the exposed piping installation.
      h. Incorporation of valves, meters and special items shown on the Drawings or specified into the piping systems as required and as specified in the appropriate Division 15, Mechanical, Sections.
      i. Unless otherwise specifically shown on the Drawings, specified, or included under other Sections, all exposed piping Work required, beginning at the outside face of structures or structure foundation and extending into the structure.

B. Coordination:
   1. Review installation procedures under other Sections and coordinate with the Work that is related to this Section.
   2. Section 15052, Exposed Piping Installation, specifies the installation of all exposed piping materials specified in Division 15, Mechanical. Coordinate with these Sections.

### 1.2 QUALITY ASSURANCE

A. Requirements of Regulatory Agencies:

1. Comply with applicable requirements of NFPA Standard No. 13 for "Installation of Sprinkler Systems" and NFPA Standard No. 14 for "Standpipe and Hose Systems" used for fire protection.
2. Comply with requirements of UL, FM and other jurisdictional authorities, where applicable.
3. Refer to the General and Supplementary Conditions regarding requirements for this Project.

B. Reference Standards: Comply with applicable provisions and recommendations of the following, except as otherwise shown or specified.
1. ANSI B 16.3, Malleable-Iron Threaded Fittings, Classes 150 and 300.
2. ANSI B 16.4, Cast Iron Threaded Fittings, Classes 125 and 250.
3. ANSI B 16.5, Pipe Flanges and Flanged Fittings, Steel Nickel Alloy and Other Special Alloys.
4. ANSI B 16.9, Factory-Made Wrought Steal Butt Welding Fittings.
5. ANSI B 16.11, Forged Steel Fittings, Socket-Welding and Threaded.
6. ANSI B 31.1, Power Piping.
7. ANSI B 31.3, Chemical Plant and Petroleum Refinery Piping.
8. ANSI B 31.8, Gas Transmission and Distribution Piping Systems.
9. AWWA C 111, Rubber Gasket Joints for Ductile-Iron Pressure Pipe and Fittings.
10. AWWA C 206, Field Welding of Steel Water Pipe Joints.
11. AWWA C 600, Installation of Ductile Iron Water Mains and Their Appurtenances.
12. AWWA C 606, Grooved and Shouldered Type Joints.
13. AWWA C 651, Disinfecting Water Mains.
14. AWWA M9, Concrete Pressure Pipe.
15. AWWA M11, Steel Water Pipe Design and Installation.
16. AWWA M23, PVC Piping.
17. AWS D 1.1, Structural Welding Code.
18. AWS D 10.7, Recommended Practices For Gas Shielded-Arc Welding of Aluminum and Aluminum Alloy Pipe.
19. AWS D 10.9, Standard for Qualification of Welding Procedures and Welders for Piping and Tubing.

## 1.3 SUBMITTALS

A. Shop Drawings: Submit for approval the following:
1. Detailed drawings in plan and section, and laying schedules.
2. Details of piping, valves, supports, accessories, specials, joints, harnessing, and connections to existing pipes and structures.

B. Tests: Submit description of proposed testing methods, procedures and apparatus. Submit copies of test report for each test.

C. Certificates: Submit certificates of compliance with referenced standards.

1. Welder's Certificate to comply with the requirements of Paragraph 3.1.D.5.b.1) of this Section, below.

D. Record Drawings:
   1. Submit Record Drawings prior to the time of Substantial Completion.

## 1.4 PRODUCT DELIVERY, STORAGE AND HANDLING

A. Deliver materials to the site to ensure uninterrupted progress of the Work.

B. Handle all pipe, fittings and accessories carefully with approved handling devices. Do not drop or roll pipe off trucks. Do not otherwise drop, roll or skid piping.

C. Store pipes and fittings on heavy wood blocking or platforms so they are not in contact with the ground.

D. Unload pipe, fittings and specials opposite to or as close to the location where they are to be installed as is practical to avoid unnecessary handling. Keep pipe interiors completely free from dirt and foreign matter.

E. Inspect delivered pipe for cracked, gouged, chipped, dented or other damaged material and immediately remove from site.

# PART 2 - PRODUCTS

## 2.1 MATERIALS

A. Required pipe materials are listed in Section 15050, Piping Systems. Refer to applicable Sections for material specifications.

B. General:
   1. Marking Piping:
      a. Clearly mark each piece of pipe or fitting with a designation conforming to that shown on the approved Shop Drawings.
      b. Cast or paint material, type and pressure designation on each piece of pipe or fitting 4-inches in diameter and larger.
      c. Pipe and fittings smaller than 4-inches in diameter shall be clearly marked by manufacturer as to material, type and rating.

C. Pipe Identification Markers and Arrows: Refer to Section 09905, Painting and Protective Coating.

# PART 3 - EXECUTION

## 3.1 INSTALLATION

A. General:
   1. Install piping as shown on the Drawings, specified and as recommended by the manufacturer.
   2. If there is a conflict between manufacturer's recommendations and the Contract Documents, request instructions from ENGINEER before proceeding.

B. Manufacturer's Installation Specialist:
   1. Provide the services of a competent installation specialist of the pipe manufacturer when pipe installation commences, if CONTRACTOR is not experienced installing a particular type of pipe, for the following:
      a. Thermoplastic pipe.

C. Piping Installation:
   1. Install straight runs true to line and elevation.
   2. Install vertical pipe truly plumb in all directions.
   3. Install piping parallel or perpendicular to building walls. Piping at angles and 45 degree runs across corners will not be accepted, unless specifically shown on the Drawings or approved by the ENGINEER.
   4. Install small diameter piping generally as shown on the Drawings when specific locations and elevations are not indicated. Locate such piping as required to avoid ducts, equipment, beams, and other obstructions.
   5. Install piping so as to leave all corridors, walkways, work areas, and like spaces unobstructed. Unless otherwise approved by the ENGINEER, provide a minimum headroom clearance under all piping of 7 feet-6 inches.
   6. Protect and keep clean water pipe interiors, fittings and valves.
   7. Provide temporary caps or plugs over all pipe openings at the end of each day's work, and when otherwise required or directed by ENGINEER.
   8. Cutting: Cut pipe from measurements taken at site, not from Drawings.
   9. Install dielectric unions or dielectric flange kits with sleeves and washers wherever dissimilar metals are connected, except for bronze or brass valves in ferrous piping.
   10. Provide a union downstream of each valve with screwed connections.
   11. Provide screwed or flanged unions at each piece of equipment, where shown on the Drawings, and where necessary to install or dismantle piping.
   12. Additional Requirements for FRP and Thermoplastic Piping:
      a. Support all valves independently of the piping system.
      b. Utilize wide band supports as recommended by manufacturer and approved by ENGINEER to minimize localized stresses.
      c. Provide piping passing through walls with a sleeve of wearing material to prevent abrasion damage to piping.
      d. When anchors are required at locations other than equipment or tanks they shall be placed at elbows, valve locations and at bends in pipe line.

e. Spacing of supports shall be in accordance with the manufacturer's published recommendations at the maximum design operating temperature of the pipe and requirements of Section 15061, Pipe Hangers and Supports.
f. Use "U" clamps with wide band circumferential contact.
g. Use guides on long runs of piping to maintain alignment and reduce chance of elastic failure of pipe. Space guides as recommended by manufacturer.
h. Expansion compensation shall comply with the requirements of Section 15061, Pipe Hangers and Supports.
i. Provide air chambers with shut-off and drain valve on all pump discharge lines to reduce hydraulic hammer and flexible connectors to absorb vibration. Submit details for ENGINEER to review.
j. Do not install pipe when temperature is less than 60°F.

D. Joints:
1. General:
a. Make joints in accordance with the pipe manufacturer's instructions and recommendations and the requirements below.
b. Cut piping accurately and squarely and install without forcing or springing.
c. Ream out all pipes and tubing to full inside diameter after cutting. Remove all sharp edges on end cuts.
d. Remove all cuttings and foreign matter from the inside of pipe and tubing before installation. Thoroughly clean all pipe, fittings, valves, specials, and accessories before installing.
2. Mechanical Joint Pipe:
a. Wipe clean the socket, plain end and adjacent areas immediately before making joint. Make certain that cut ends are tapered and sharp edges are filed off smooth.
b. Lubricate the plain end and gasket with soapy water or manufacturer's recommended pipe lubricant, in accordance with AWWA C 111, just prior to slipping the gasket onto the plain end of the joint assembly.
c. Place the gland on the plain end with the lip extension toward the plain end, followed by the gasket with the narrow edge of the gasket toward the plain end.
d. Insert the pipe into the socket and press the gasket firmly and evenly into the gasket recess. Keep the joint straight during assembly.
e. Push gland toward socket and center it around pipe with the gland lip against the gasket.
f. Insert bolts and hand tighten nuts.
g. Make deflection after joint assembly, if required, but prior to tightening bolts. Alternately tighten bolts 180 degrees apart to seat the gasket evenly. The bolt torque shall be as follows:

| Pipe Size | Bolt Size | Range of Torque |
|---|---|---|

| (inches) | (inches) | (ft-lbs) |
|---|---|---|
| 3 | 5/8 | 45 to 60 |
| 4 to 24 | 3/4 | 75 to 90 |
| 30 to 36 | 1 | 100 to 120 |
| 42 to 48 | 1-1/4 | 120 to 150 |

3. Flanged Joints:
   a. Assemble flanged joints using 1/8-inch ring-type gaskets for raised face flanges. Use full face gaskets for flat face flanges, unless otherwise approved by ENGINEER. Gaskets shall be suitable for the service intended in accordance with the manufacturer's ratings and instructions. Gaskets shall be properly centered.
   b. Bolts shall be tightened in a sequence which will ensure equal distribution of bolt loads.
   c. The length of bolts shall be uniform, and they shall not project beyond the nut more than 1/4-inch or fall short of the nut when fully taken up. The ends of bolts shall be machine cut so as to be neatly rounded. No washers shall be used.
   d. Bolt threads and gasket faces for flanged joints shall be lubricated prior to assembly as recommended by manufacturer.
   e. Alternately tighten bolts 180 degrees apart to compress the gasket evenly.
4. Thermoplastic Pipe Joints:
   a. Solvent Cement Joints:
      1) Bevel pipe ends and remove all burrs before making joints. Clean both pipe and fittings thoroughly. Do not attempt to make solvent cement joints if temperature is below 40°F nor in wet conditions.
      2) Use solvent cement supplied or recommended by the pipe manufacturer.
      3) Apply joint primer and solvent cement and assemble joints in strict accordance with the recommendations and instructions of the manufacturer of the joint materials and the pipe manufacturer.
      4) Observe safety precautions with the use of joint primers and solvent cements. Allow air to circulate freely through pipelines to permit solvent vapors to escape. Slowly admit water when flushing or filling pipelines to prevent compression of gases within pipes.
   b. Threaded Joints:
      1) Cut pipe square and smooth and remove burrs or raised edges with a knife or file. Hold pipe firmly in a pipe vise. Protect pipe at the point of grip by inserting a rubber sheet or other material between the pipe and vise. Thread pipe in accordance with the pipe manufacturer's recommendations. Brush threads clean of chips and ribbons. Then starting with the second full thread, and continuing over the thread length, wrap Teflon thread tape in the direction of the threads.

Overlap each wrap by one half the width of the tape. Screw the fitting or coupling onto the pipe and tighten by hand. Using a strap wrench only, further tighten the connection an additional one to two threads past tightness.

5. Copper Tubing Joints:
   a. Assemble copper tubing with soldered joints. Solder shall be 95-5 tin-antimony conforming to ASTM B 32.
   b. Ream or file pipe to remove burrs.
   c. Clean and polish contact surfaces of joints.
   d. Apply flux to both male and female ends.
   e. Insert end of tube into full depth of fitting socket.
   f. Heat joint evenly.
   g. Form continuous solder bead around entire circumference of joint.
   h. Runs shall contain unions at connections to equipment and at reasonable distances along the lengths of runs to permit convenient disassembly of piping and removal of equipment.

E. Installing Valves and Accessories:
   1. Provide supports for large valves, flow meters and other heavy items as shown on the Drawings or required.
   2. Install floor stands as shown on the Drawings and as recommended by the manufacturer.
   3. Provide lateral restraints for extension bonnets and extension stems as shown on the Drawings and as recommended by the manufacturer.
   4. Provide steel sleeves where operating stems pass through floor. Extend sleeves 2-inches above floor.
   5. Position valve operators as shown on the Drawings. When the position is not shown on the Drawings, install the valve so that it can be conveniently operated and as approved by ENGINEER. Avoid placing operators at angles to the floors or walls.
   6. Position flow measuring devices in pipe lines so that they have the amount of straight upstream and down stream runs recommended by the manufacturer, unless specific location dimensions are shown on the Drawings. Position swing check valves so that they do not conflict with the discs of butterfly valves.

F. Unions:
   1. Install dielectric unions wherever dissimilar metals are connected, except for bronze or brass valves in ferrous piping.
   2. Provide a union downstream of each valve with screwed connections.
   3. Provide screwed or flanged unions at each piece of equipment, where shown on the Drawings, and where necessary to install or dismantle piping.

G. Eccentric Reducers: Use eccentric reducers where shown on the Drawings and where air or water pockets would otherwise occur in mains because of a reduction in pipe size.

H. Transitions from One Type of Pipe to Another:

1. Provide all necessary adapters, specials and connection pieces required when connecting different types and sizes of pipe or connecting pipe made by different manufacturers.

I. Taking Existing Pipelines Out of Service:
   1. Do not take pipelines out of service, unless specifically named below or approved by ENGINEER.
      a. Refer to Section 01143, Coordination with OWNER'S Operations.
   2. Notify ENGINEER at least 48 hours prior to taking pipeline out of service.

J. Work on Existing Pipelines:
   1. Cut or tap pipes as shown on the Drawings or required with machines specifically designed for this Work.
   2. Install temporary plugs to keep out all dirt, water and debris.
   3. Provide all necessary adapters, fittings, pipe and appurtenances required.

## 3.2 THRUST RESTRAINT

A. Provide thrust restraint on all pressure piping systems and where otherwise shown on the Drawings or specified.

B. Thrust restraint shall be accomplished by means of restrained pipe joints. Thrust restraints shall be designed for the axial thrust exerted by the test pressure specified in Section 15050, Piping Systems.

C. Restrained Pipe Joints:
   1. Pipe joints shall be restrained by means suitable for the type of pipe being installed.
      a. Restrain ductile iron mechanical joint pipe utilizing tie rods and clamps or proprietary restrained joint system conforming to the requirements of Section 15101, Ductile Iron Pipe.
      b. Restrain ductile iron pipe connected by flexible couplings or flanged coupling adapters by harnessing across the coupling or adapter using tie rods or extended bolts connecting between flanges.
      c. Steel pipe shall have butt-welded joints, flanged joints, or flexible or mechanical coupling connectors. Provide tie rods connected to ears welded to the steel pipe for restraint at all flexible coupling connectors.

## 3.3 PAINTING

A. Field painting shall conform to the requirements of Section 09905, Painting and Protective Coating.

## 3.4 TESTING OF PIPING

A. General:

1. Test all piping as specified below, unless otherwise authorized by ENGINEER.
2. Notify ENGINEER 48 hours in advance of testing.
3. Provide all testing apparatus including pumps, hoses, gages, and fittings.
4. Pipelines shall hold the specified test pressure for two hours.
5. Repair and retest pipelines which fail to hold specified test pressures or which exceed the allowable leakage rate.
6. Test pressures required are at the lowest elevation of the pipeline section being tested, unless otherwise specified.
7. Follow special test procedures below for gaseous chemical and liquid chlorine lines.
8. Conduct all tests in the presence of the ENGINEER. Repeat tests in the presence of local authorities having jurisdiction, if required.

B. Schedule of Pipeline Tests:
1. Test piping at the test pressure specified in Section 15050, Piping Systems.
2. For piping not included in Section 15050, Piping Systems, the ENGINEER will notify CONTRACTOR, in writing, of the test pressure to be utilized.

C. Pressure Test Procedure:
1. Ensure that all supports and restraint protection are securely in place.
2. Fill section to be tested slowly with water and expel all air. Install cocks, if necessary, to ensure removal of air.
3. Test only one section of pipe at a time.
4. Apply specified test pressure required for two hours and observe pressure gage. Check carefully for leaks while test pressure is being maintained.

D. Leakage Testing:
1. Conduct leakage test after satisfactory completion of pressure test.
2. Allow concrete pipe to stand full of water at least 12 hours prior to starting leakage test.
3. Allowable Leakage Rates (gallons per hour per 1000 feet per inch diameter):
   a. Concrete Pressure Pipe: 0.0.
   b. Copper, Steel, Ductile Iron, Thermoplastic, and all Other Piping: 0.0.
   c. Ductile Iron Pipe with Mechanical Joints: 0.0.
4. Leakage Test Procedure:
   a. Examine exposed pipe, joints, fittings and valves. Repair visible leakage or replace the defective pipe, fitting or valve.
   b. Refill the line under test to reach the required test pressure.
   c. Provide a test container filled with a known quantity of water at the start of the test. Attach the test pump suction to the test container.
   d. Pump water from the test container into the line with the test pump to hold the specified test pressure for the test period. Water remaining in the container shall be measured and the amount used during the test shall be recorded on the test report.
   e. Perform all repair, replacement, and retesting required because of failure to meet testing requirements.

f. Leakage shall be less than rate specified above.

## 3.5 CLEANING AND DISINFECTION

A. Cleaning:
   1. Thoroughly clean all piping and flush prior to placing in service in a manner approved by ENGINEER.
   2. Piping 24-inches in diameter and larger shall be inspected from inside and all debris, dirt and foreign matter removed.
   3. If piping which requires disinfection has not been kept clean during storage or installation, swab each section individually with a five percent hypochlorite solution, to ensure clean piping.

## 3.6 DISPOSAL OF WATER

A. Provide suitable means for disposal of test and flushing water so that no damage results to facilities or waterways.

B. Means of disposal of test and flushing water shall be subject to the approval of ENGINEER, local governing authorities and regulatory agencies.

C. Responsibility for any damages caused by the water disposal operations belongs to CONTRACTOR.

## 3.7 IDENTIFICATION OF PIPING

A. Pipe Identification Markers and Arrows:
   1. Product and Manufacturer: Provide one of the following:
      a. Brady B-500 vinyl cloth self sticking arrows and markers except on insulated pipe. Brady B-350 perma-code film self sticking arrows and markers on pipe insulation.
      b. Equivalent products as made by Seton Name Plate Corporation.
      c. Or equal.
   2. Install markers and arrows at following locations:
      a. At intervals not exceeding 50 feet along continuous runs of pipe.
      b. Wherever pipes pass through walls, floors or panels.
      c. At each valve or equipment connection.
      d. At each branch where it connects to a main line.

+ + END OF SECTION + +

# SECTION 15061

# PIPE HANGERS AND SUPPORTS

## PART 1 - GENERAL

### 1.1 DESCRIPTION

A. Scope:
   1. Provide all labor, materials, equipment, and incidentals as shown on the Drawings, specified and required to design, furnish, and install all hangers, supports and appurtenances required to complete the Work.

### 1.2 QUALITY ASSURANCE

A. Each type of pipe hanger, pipe guide, anchor or support shall be the product of one manufacturer.

B. Reference Standards: Comply with applicable provisions and recommendations of the following, except as otherwise shown or specified.
   1. The Manufacturers Standardization Society of the Valve and Fittings Industry:
      a. MSS SP-58, Pipe Hangers and Supports - Materials and Design.
      b. MSS SP-69, Pipe Hangers and Supports - Selection and Application.
   2. Federal Specification, FS A-A-1192, Hangers and Support, Pipe.
   3. ASTM A 575, Specification for Steel Bars, Carbon, Merchant Quality, M-Grades.
   4. Underwriters' Laboratories, Inc., Standard UL-203-Pipe Hanger Equipment.

### 1.3 SUBMITTALS

A. Shop Drawings: Submit for approval the following:
   1. Detailed drawings showing all hangers, supports and expansion compensation for each piping system specified. Shop Drawings shall show location, installation, material, loads and forces, and deflection of all hangers and supports, including expansion and contraction. Each pipe system shall be analyzed for all loads and forces on the hangers and supports, and their reaction forces to the structure to which they are fastened.
   2. Submit and coordinate these with Shop Drawings required for all piping systems, valves and appurtenances.
   3. Refer to and comply with the requirements of Section 01332, Shop Drawing Procedures.

B. Product Information: Submit manufacturers' catalogs, literature, and engineering data on all hangers and supports. Load ratings, materials and installation shall be consistent with the recommendations of the MSS SP-58, MSS SP-69 and Federal Specification A-A-1192.

## 1.4 PRODUCT DELIVERY, STORAGE, AND HANDLING

A. Deliver materials to the site to ensure uninterrupted progress of the Work. Deliver pipe hanger inserts and anchorage devices which are to be embedded in cast-in-place concrete in ample time to prevent delay of the Work. Refer to and comply with the requirements of Section 01651, Transportation and Handling of Materials and Equipment.

B. All boxes, crates and packages shall be inspected by CONTRACTOR upon delivery to the site. Notify ENGINEER of any loss or damage exists to equipment or components. Replace loss and repair damage to new condition in accordance with manufacturer's instructions.

C. Store materials to permit easy access for inspection and identification. Keep all materials off ground, using pallets, platforms or other supports. Protect steel members and packaged materials from corrosion and deterioration. Refer to and comply with the requirements of Section 01661, Storage of Materials and Equipment.

# PART 2 - PRODUCTS

## 2.1 GENERAL

A. Hangers and supports shall meet with the following requirements:
   1. Standard and fabricated hangers and supports shall be furnished complete with necessary inserts, bolts, nuts, rods, washers, and other accessories.
   2. Install hangers or supports at all locations where pipe changes direction.
   3. All hangers and supports shall be capable of adjustment after placement of piping.
   4. Different types of hangers or supports shall be kept to a minimum.
   5. Maximum support spacing, unless otherwise shown on the Drawings or approved shall be as follows:

| Pipe Size (inches) | Maximum Pipe Span [1] (feet) | | | |
|---|---|---|---|---|
| | Steel | Copper | Plastic [2] | Cast/Ductile Iron [4] |

| | | | | |
|---|---|---|---|---|
| 3/8 to 3/4 | 5 | 6 | Cont. [3] | - |
| 1 | 6 | 6 | 5 | - |
| 1-1/4 | 6 | 6 | 5 | - |
| 1-1/2 | 6 | 6 | 5 | - |
| 2 | 10 | 10 | 5 | - |
| 2-1/2 | 10 | 10 | 5 | - |
| 3 | 10 | 10 | 5 | - |
| 4 | 12 | 12 | 5 | 12 feet for pressure pipe |
| 6 | 12 | 12 | 5 | |
| 8 | 12 | 12 | 5 | |
| 10 | 12 | - | 5 | |
| 12 | 12 | - | 10 | |
| 14 | 12 | - | - | |
| 16 | 12 | - | - | |
| 18 | 12 | - | - | |
| 20 | 12 | - | - | 10 feet for soil pipe |
| 24 | 12 | - | - | |
| 36 | 12 | - | - | |

[1] Pipe shall not have pockets formed in the span due to sagging of the pipe between supports caused by the weight of the pipe, medium in the pipe, insulation, valves and fittings.

[2] Span shown is for Schedule 80 CPVC pipe at 100°F. Spans for other plastics, other CPVC pipe Schedules and pipes at higher temperatures shall be shortened in accordance with the pipe manufacturer's recommendations.

[3] Continuous means pipe shall be in unistrut or similar channel.

[4] Pipe hanger and support selection shall be as shown on the Drawings and this Section.

6. Maximum support spacing, unless otherwise shown on the Drawings, for plastic pipe at ambient temperature shall be one-half of the values specified for steel pipe.
7. Plastic pipe at temperature greater than 130°F shall be continuously supported in a metal cradle or tray.
8. Where proper hanger or support spacing does not correspond with joist or rib spacing, structural steel channels may be attached to joists or ribs and pipes suspended therefrom.
9. Prevent contact between dissimilar metals when supporting copper tubing, by use of copper plated, rubber or vinyl coated, or stainless steel hangers or supports.
10. Isolate thin walled stainless steel piping from carbon steel by use of plastic coated hangers or supports or by taping at points of contact with PVC or vinyl.
11. Supports and hangers shall be of a material that is compatible with the fluid being conveyed in such pipe being supported.

12. Anchors for pipe support systems shall be compatible or protected by a coating system which is compatible with the fluid being conveyed in such pipe being supported.
13. Pipe stands shall be a minimum of 3-inches in diameter and the discharge header shall have hold-down straps. Supports shall have a minimum of 2-inch dry packed grout under 100 percent of the support plate and no voids are allowed. The grout shall be struck off tapered on all sides.
14. Wherever there is a removable, serviceable piece of equipment within the piping system, there must be a support on either side in such a way to allow the equipment to be removed without disturbing the pipe alignment.

B. Expansion compensation shall be designed for individual exposed piping systems with the following Design Criteria:
   1. $\Delta L = L \times \Delta T \times \alpha$
      a. Where $\Delta L$ = pipe length change (in.)
      b. L = pipe length between anchors (in.)
      c. $\Delta T$ = 100 (F)
      d. $\alpha$ = coefficient of thermal expansion (in./in./F)
   2. Expansion compensation shall be designed as an integral part of the piping hanger, support and anchorage system.
   3. Expansion compensation shall be achieved via expansion joints specified in Section 15120, Piping Specialties and Accessories.

## 2.2 HANGERS AND SUPPORTS

A. Hangers, supports, pipe guides and anchors where shown shall be in accordance with the Drawings. Hangers and supports not shown shall be in accordance with MSS SP-58.

## 2.3 PAINTING

A. Clean and shop prime ferrous metal surfaces in the shop in accordance with the requirements of Section 09905, Painting and Protective Coating.

B. Field painting shall conform to the requirements of Section 09905, Painting and Protective Coating.

# PART 3 - EXECUTION

## 3.1 INSTALLATION

A. Locate supports and accessories to support piping, valves, and at all concentrated loads.

B. Locate supports, and accessories within maximum span lengths specified to support continuous pipeline runs unaffected by concentrated loadings.

C. Locate supports to prevent vibration and to provide for expansion and contraction.
   1. Temperature differential as specified in this Section.
   2. Support piping independently so that equipment is not stressed by piping weight or expansion/contraction.
   3. For Uninsulated Copper Pipe or Tubing: Clamps and supports, electroplated copper finish. All tubing layout and connections shall be as approved by the manufacturer of the equipment.
   4. Uncoated Hangers, Rods and Supports: Dip in zinc chromate primer before installation.
   5. Maximum spacing for horizontal piping:
      a. Refer to table in Paragraph 2.1.A.5, above.
      b. Additional supports at:
         1) Change in direction.
         2) Branch piping and runouts over five feet.
         3) Concentrated loads due to valves, strainers and other similar items.
      c. Maximum support spacing for plastic pipe at ambient temperature shall conform to the requirements of the table located in Paragraph 2.1.A.9., above, unless otherwise shown on the Drawings.
   6. Hanger types for horizontal piping, except as noted and shown on the Drawings:
      a. Forged steel adjustable clevis type, rod support for all service.
      b. Slide Bases:
         1) Pipe stand, brackets, trapeze or other equivalent structural support.
         2) For piping 2-inches or larger.
      c. For pipe and covering provide:
         1) Saddles for rollers or slide bases.
         2) Protective shields or saddles for all other types of supports.
      d. Threaded Steel Rods:
         1) Two inch vertical adjustment with two nuts at each end for positioning and locking.
         2) Size hanger rods according to the schedule below, unless otherwise noted on the Drawings:

| Nominal Pipe (Inches) | Rod Diameter (Inches) |
|---|---|
| 2 and less | 3/8 |
| 2-1/2 to 3-1/2 | 1/2 |
| 4 | 5/8 |

| | |
|---|---|
| 6 | 3/4 |
| 8 through 12 | 7/8 |
| 14 through 18 | 1 |
| 20 through 30 | 1-1/4 |

3) For Double Rod Hangers: One size smaller than above.
4) Connection to Structure for Piping to 2-Inches: Concrete inserts in shear into sides of beams.
5) Connection to Structure for Piping 2-1/2 Inches or Larger: Concrete inserts, beam clamps or suitable bridging.

+ + END OF SECTION + +

# SECTION 15101

# DUCTILE IRON PIPE

## PART 1 - GENERAL

### 1.1 DESCRIPTION

A. Scope:
   1. Provide all labor, materials, equipment and incidentals as shown on the Drawings, specified and required to furnish ductile iron pipe and fittings.
   2. The extent of the piping is shown on the Drawings and in Section 15050, Piping Systems.

### 1.2 QUALITY ASSURANCE

A. Manufacturer's Qualifications:
   1. Manufacturer of ductile iron pipe and fittings shall have a minimum of five years of experience producing ductile iron pipe and fittings, and shall be able to show evidence of at least five installations in satisfactory operation.

B. Reference Standards: Comply with applicable provisions and recommendations of the following, except as otherwise shown or specified.
   1. AWWA C104, Cement-Mortar Lining for Ductile Iron Pipe and Fittings for Water.
   2. AWWA C110, Ductile Iron and Gray-Iron Fittings, 3 in. through 48 in., for Water and Other Liquids.
   3. AWWA C111, Rubber-Gasket Joints for Ductile Iron Pressure Pipe and Fittings.
   4. AWWA C115, Flanged Ductile Iron Pipe with Threaded Flanges.
   5. AWWA C150, Thickness Design of Ductile Iron Pipe.
   6. AWWA C151, Ductile Iron Pipe, Centrifugally Cast, for Water or Other Liquids.
   7. AWWA C600, Installation of Ductile Iron Water Mains and Their Appurtenances.
   8. AWWA C606, Grooved and Shouldered Type Joints.
   9. ANSI B16.1, Cast Iron Pipe Flanges and Flanged Fittings.
   10. ANSI B18.2.1, Square and Hex Bolts and Screws Inch Series, Including Hex Cap Screws and Lag Screws.
   11. ANSI B18.2.2, Square and Hex Nuts.
   12. ASTM A 307, Specification for Carbon Steel Bolts and Studs, 60,000 psi Tensile Strength.
   13. ASTM A 354, Specification for Quenched and Tempered Alloy Steel Bolts, Studs and Other Externally Threaded Fasteners.

### 1.3 SUBMITTALS

A. Shop Drawings: Submit for approval the following:
   1. Submit detailed drawings and data on pipe, fittings, gaskets and appurtenances as required. Refer to and comply with the requirements of Section 15051, Buried Piping Installation, Section 15052, Exposed Piping Installation, Section 15121, Wall Pipes, Floor Pipes and Pipe Sleeves, and Section 15061, Pipe Hangers and Supports.
   2. Product data on the NSF approval protective coatings.

B. Certificates: Submit certificates of compliance with referenced standards.

## 1.4 PRODUCT DELIVERY, STORAGE AND HANDLING

A. Refer to Section 15051, Buried Piping Installation, and Section 15052, Exposed Piping Installation.

# PART 2 - PRODUCTS

## 2.1 MATERIALS

A. General: Joints shall be as specified in Section 15050, Piping Systems. If not specified, provide flanged joints for exposed piping and push-on or mechanical joints for buried piping. Couplings shall be provided on pipe with plain or grooved ends where shown on the Drawings or where approved by ENGINEER.

B. Ductile Iron Pipe and Fittings:
   1. Flanged Pipe: Fabricate in accordance with requirements of AWWA C115.
      a. Thickness: As specified in Section 15050, Piping Systems. If not shown on the Drawings, use Class 350.
   2. Non-Flanged Pipe: Conform to AWWA C151 for material, pressure, dimensions, tolerances, tests, markings and other requirements.
      a. Pressure: As specified in Section 15050, Piping Systems. If not shown on the Drawings, use Pressure Class 350.
      b. Thickness: Class 52.
   3. Joints:
      a. Flanged Joints: Conform to AWWA C110 and C115 capable of meeting, working and test pressure specified Section 15050, Piping Systems.
         1) Gaskets: High temperature resistant sealing compounds (Loctite PST 592) or equivalent with Dimethacrylate ester base and Teflon can be used.
            a) Gaskets: Unless otherwise specified, gasket stock shall be a synthetic rubber, 1/8-inch thick, full face, compound in which the elastomer is nitrile or neoprene. The compound shall contain not less than 50 percent by volume nitrile or neoprene and shall be free from factice, reclaimed rubber and other deleterious

substances. Gaskets shall comply with AWWA C111 for push-on and mechanical joints with AWWA C606 for grooved end joints.

2) Bolts and Nuts: Conform to ANSI B18.2.1 and ANSI B18.2.2, respectively. Exposed bolts and nuts shall be ASTM A 307, Grade B. Buried or submerged bolts and nuts shall be Type 316 stainless steel.

b. Mechanical Joints: Conform to AWWA C110 and AWWA C111.
   1) Glands: Ductile iron.
   2) Gaskets: Plain Tip.
   3) Bolts and Nuts: High strength, low alloy steel.

c. Push-On Joints: Conform to AWWA C111.
   1) Gaskets: Molded rubber.
   2) Strips: Each plain end shall be painted with a circular stripe to provide a guide for visual check that joint is properly assembled.

d. Grooved End Joints: Conform to AWWA C606.
   1) Gaskets: Flush seal type designed for ductile iron.
   2) Bolts and nuts: As specified for flanged joints.
   3) Unless otherwise specified, grooved end couplings shall be rigid joint for exposed service and flexible joint for buried service.
   4) Grooved end joints shall be as manufactured by one of the following:
      a) Victaulic, Style 31
      b) Or equal.

e. Restrained Joints: Restrained push-on joints shall be capable of being deflected after full assembly. Joint assembly shall be in strict conformance with AWWA C600 and manufacturer's recommendations. No field cuts of restrained pipe are permitted without prior approval of the ENGINEER.

f. Restrained Joints:
   1) Restrained joints for mechanical joint piping shall be one of the following:
      a) Push-On-Restrained Joint, as manufactured by Clow Cast Iron Pipe and Foundry Division of the Clow Corporation.
      b) Megalug, Series 1100, as manufactured by EBBA Iron Sales, Inc..
      c) Stargrip, Series 3000
   2) Restrained joints for push-on joint piping shall be one of the following:
      a) Clow Super-lock Joint Pipe, as manufactured by Clow Cast Iron Pipe and Foundry Division of Clow Corporation.
      b) Lok-Ring Joint, or Flex-Ring Joint, as manufactured by American Cast Iron Pipe Company.
      c) TR Flex Joint, as manufactured by U.S. Pipe.

4. Flanged fittings: Conform to AWWA C110 and AWWA C115.
   a. Pressure Rating: 150 psi.
   b. Material: Ductile iron.
   c. Gaskets: As specified above for joints.
   d. Bolts and Nuts: As specified above for joints.

5. Mechanical Joint Fittings: Conform to AWWA C110.

a. Pressure Rating: 150 psi.
b. Material: Ductile iron.
c. Glands: Use ductile iron glands only. Cast iron glands are not allowed.
d. Gaskets: As specified above for joints.
e. Bolts and Nuts: As specified above for joints.

6. Coatings:
   a. Exposed pipe shall be prime coated in accordance with Section 09905, Painting and Protective Coating.
7. Epoxy Lining Material: The material shall be an amine cured novalac epoxy containing at least 20 percent by volume of ceramic quartz pigment. Epoxy lining material manufacturer shall demonstrate a successful history of lining pipe and fittings for sewer service and submit a test report verifying the following properties, and a certification of the test results.
   a. A permeability rating of 0.00 when tested according to Method A of ASTM E-96-66, Procedure A with a test duration of 30 days.
   b. The following test shall be run on coupons from factory lined ductile iron pipe:
      1) ASTM B-117 Salt Spray (scribed panel): Results to equal 0.0 undercutting after two years.
      2) ASTM G-95 Cathodic Disbondment 1.5 volts at 77°F: Results to equal no more than 0.5 mm undercutting after 30 days.
      3) Immersion Testing rated using ASTM D-714-87.
         a) 20 percent Sulfuric Acid: No effect after two years.
         b) 25 percent Sodium Hydroxide: No effect after two years.
         c) 160°F Distilled Water: No effect after two years.
         d) 120°F Tap Water (Scribed panel): 0.0 undercutting after two years with no effect.
   c. An abrasion resistance of no more than four mils loss after one million cycles - European Standard EN 598: 1994 Section 7.8 Abrasion Resistance.
   d. Interior of the pipe shall receive 40 mils dry film thickness.
   e. Applicator: The lining shall be applied by a competent firm with a successful history of applying linings to the interior of ductile iron pipe and fittings.
   f. Surface Preparation: Pipe surfaces shall be cleaned and sand blasted prior to lining application in accordance with manufacturer's recommended procedures.
   g. Inspection and Certification:
      1) All ductile iron pipe and fitting linings shall be checked for thickness using a magnetic film thickness gauge. The thickness testing shall be done using the method outlined in SSPC-PA-2 Film Thickness Rating.
      2) The interior lining of all pipe barrels and fittings shall be tested for pinholes with a non-destructive 2,500 volt test. Any defects found shall be repaired prior to shipment.
      3) The pipe or fitting manufacturer shall supply a certificate attesting to the fact that the applicator met the requirements of this specification.

h. Product and Manufacturer: Provide one of the following:
   1) Protecto 401.
   2) Or equal.

C. Couplings:
   1. Refer to Section 15120, Piping Specialties and Accessories.

D. Specials:
   1. Transition Pieces:
      a. Furnish suitable transition pieces (adapters) for connections to existing piping.
      b. Unless shown on Drawings, expose existing piping to determine material, dimensions and other data required for transition pieces.
   2. Taps:
      a. Provide taps where shown on the Drawings or required for small diameter pipe connections.
      b. Provide corporation stops where shown on the Drawings or required.
      c. Provide a tapping saddle conforming to the requirements of Paragraph 2.1.D.3.b.

## 2.2 MARKING FOR IDENTIFICATION

A. All pipeline materials shall be stamped, marked or identified with the following:
   1. Name or trade mark of the manufacturer.
   2. Pipe class.
   3. Size and length dimensions.
   4. Date and place of manufacture.

## 2.3 SURFACE PREPARATION AND SHOP PAINTING

A. Exposed pipe and fittings:
   1. Clean and prime coat ferrous metal surfaces of piping in the shop in accordance with the requirements of Section 09905, Painting and Protective Coating.
   2. Field painting shall conform to the requirements of Section 09905, Painting and Protective Coating.

# PART 3 - EXECUTION

## 3.1 INSTALLATION

A. For buried piping installation and testing, refer to Section 15050, Piping Systems, and Section 15051, Buried Piping Installation.

B. For exposed piping installation and testing, refer to Section 15050, Piping Systems, and Section 15052, Exposed Piping Installation.

## 3.2 INSPECTION

A. Inspect all piping to assure that piping is free from defects in material and workmanship. The compatibility of all pipe, fittings, gaskets and coatings shall be verified.

+ + END OF SECTION + +

# SECTION 15102

# STEEL PIPE – LINED AND COATED

## PART 1 - GENERAL

### 1.1 SECTION INCLUDES

A. Steel transmission piping greater than 22 inches in nominal diameter and internal pressures up to 300 pounds per square inch, including joints, fittings, pipe lining and coating.

B. Related sections:
   1. The Contract Documents are complementary; what is called for by one is as binding as if called for by all.
   2. It is the CONTRACTOR's responsibility for scheduling and coordinating the Work of subcontractors, suppliers, and other individuals or entities performing or furnishing any of CONTRACTOR's Work.

### 1.2 REFERENCES

A. American Association of State Highway and Transportation Officials (AASHTO):
   1. Standard H-20.

B. American Society of Mechanical Engineers (ASME):
   1. B16.5 - Pipe Flanges and Flanged Fittings.
   2. Boiler and Pressure Vessel Code.
   3. B16.47 - Large Diameter Steel Flanges: NPS 26 Through NPS 60 Metric/Inch Standard.

C. American Water Works Association (AWWA):
   1. C200 - Steel Water Pipe 6 Inches and Larger.
   2. C203 - Coal-Tar Protective Coatings and Linings for Steel Water Pipelines-Enamel and Tape-Hot Applied.
   3. C205 - Standard for Cement-Mortar Protective Lining and Coating for Steel Water Pipe-4 Inches and Larger-Shop Applied.
   4. C206 - Field Welding of Steel Water Pipe.
   5. C207 - Standard for Steel Pipe Flanges for Waterworks Service-Sizes 4 inches Through 144 inches.
   6. C208 - Standard for Dimensions for Fabricated Steel Water Pipe Fittings.
   7. C209 - Standard for Cold-Applied Tape Coatings for the Exterior of Special Sections, Connections, and Fittings for Steel Water Pipelines.
   8. C214 - Standard for Tape-Coating Systems for the Exterior of Steel Water Pipelines.
   9. C215 - Extruded Polyolefin Coatings for the Exterior of Steel Water Pipelines.

10. C216 -Standard for Heat-Shrinkable Cross-Linked Polyolefin Coatings for the Exterior of Special Sections, Connections, and Fittings for Steel Water Pipelines.
11. C604 – Installation of Buried Steel Water Pipe 4 Inches Diameter and Larger.
12. Manual M 11 - Steel Pipe - A Guide for Design and Installation.

D. ASTM International (ASTM):
1. A 193 - Standard Specification for Alloy-Steel and Stainless Steel Bolting Materials for High Temperature or High Pressure Service and Other Special Purpose Applications.
2. A 194 - Standard Specification for Carbon and Alloy Steel Nuts for Bolts for High Pressure or High Temperature Service, or Both.
3. C 150 - Standard Specification for Portland Cement.
4. D 297 - Standard Test Methods for Rubber Products-Chemical Analysis.
5. D 412 - Standard Test Methods for Vulcanized Rubber and Thermoplastic Elastomers - Tension.
6. F 37 - Standard Test Methods for Sealability of Gasket Materials.

E. NSF International:
1. 61 - Drinking Water System Components - Health Effects.

## 1.3 SUBMITTALS

A. Shop drawings: Provide detailed layout drawings showing stations, lengths and invert elevations for each joint for the pipeline.
1. Indicate thickness of steel pipe wall, lining and coating, type of joint and joint restraint, if any.
2. Details of straight pipe, fittings, and specials, showing thickness and dimensions of plates, detail of welds, and materials; listing of proposed service and tabulated layout schedules.

B. Design calculations: Wall thicknesses for external earth and live loading, special loading, internal pressures and thrust restraint, including working pressure, surge pressure and test pressure. Include design calculations against buckling. For thrust restraint, all inline valves shall be treated as dead-end in both directions.
1. Weld thickness shall be determined by the pipe manufacturer engineer for both restrained and unrestrained joints and fittings.
2. **All design calculations shall be performed and sealed by an Arizona Registered Professional Engineer.**

C. Certificates of Compliance:
1. Per AWWA C200, C205, C209 and C214.
2. Provide NSF Part 61 certification, where pipe is used for potable water service.
3. Mill Steel Certificates.

D. Test reports: Rubber gaskets.

## 1.4 QUALITY ASSURANCE

A. General: Provide new pipe, not from manufacturer's inventory.

B. Manufacturer's qualifications:
   1. Provide products from manufacturer experienced in design, and manufacture of pipe material for purpose required, and who has established record of manufacturing of such pipe.
   2. Submit references giving location, service, and contact person and contact phone number and e-mail address for 3 similar pipelines now in service.
   3. All the pipe and fittings for the project must be manufactured at the same facility.

C. Factory Testing:
   1. The OWNER reserves the option to have an independent testing laboratory, at the OWNER's expense, inspect pipe and fittings at the Pipe Manufacturer's plant. The OWNER's testing laboratory and ENGINEER shall have free access to the Manufacturer's plant. The pipe manufacturer shall notify the OWNER, in writing, at least two (2) weeks ahead of pipe fabrication as to start of fabrication and fabricating schedule so that the OWNER can advise the Manufacturer as to OWNER's decision regarding tests to be performed by an independent testing laboratory. In event the OWNER elects to retain an independent testing laboratory to make material tests and weld tests, it is the intent that the tests be limited to one (1) spot testing of each category unless the tests do not show compliance with the standard. If these tests do not show compliance, the OWNER reserves the right to have the laboratory make additional tests and observations.
   2. The OWNER will require the Manufacturer to furnish mill test certificates on reinforcing steel or wire, steel plate, and cement. The Manufacturer shall perform the tests described in AWWA C200, for all pipe, fittings, and specials.

D. Manufacturer's Technician for Pipe Installation:
   1. During the construction period, the Pipe Manufacturer shall furnish the services of a factory trained, qualified, job experienced technician assistant as necessary in pipe laying and pipe jointing. This technician shall assist and advise the Construction Contractor in his pipe laying operations and shall instruct construction personnel in proper joint assembly and joint inspection procedures. The technician is not required to be on-site full time; however, the technician shall be on-site during the first week of pipe laying and thereafter as requested by the ENGINEER, OWNER, or CONTRACTOR.

E. Welder's Qualifications:
   1. The CONTRACTOR shall submit current certifications for welders performing work on the project.

F. Warranty:
   1. The CONTRACTOR shall warrant and shall obtain from the manufacturer its warranty that the pipe conforms to these specifications and will be free from defects in materials and workmanship for a period of 1 year from the date of Substantial Completion of this Contract. Said manufacturer's warranty shall be in a form acceptable to, and for the benefit of, the OWNER, and shall be submitted as a condition of final payment.
   2. The CONTRACTOR shall repair or replace, at the sole option of, and at no cost to the OWNER and their representatives, any work found to be defective within said warranty period. Such repair or replacement shall include the cost of removal and reinstallation, inspection, and acceptance testing.

G. The CONTRACTOR shall also warrant to the OWNER that the materials used on this Contract, where covered by patents or license agreements, are furnished in accordance with such agreements and that the prices included herein cover all applicable royalties and fees in accordance with such license agreements.

## 1.5 DELIVERY, STORAGE, AND HANDLING

A. General: Deliver, store, and handle pipe in accordance with AWWA C200, M-11 and as specified.

B. Preparations for shipping:
   1. Minor repairs to cement mortar lining or coating:
      a. Defective linings as identified in AWWA C205 shall be removed from the pipe wall and replaced to the full thickness required. Defective linings shall be cut back to a square shoulder to avoid feather edges.
      b. Subject to review and approval of the ENGINEER, shrinkage cracks less than 0.005 inch wide need not be repaired. Pipe and fittings with cracks wider than 0.005 inch shall be repaired or rejected.
      c. Do not make minor repairs without prior acceptance by the ENGINEER of the written repair procedures.
      d. Compact coating repairs to the same density as the original machine applied mortar.
      e. Do not apply curing compound to the repair where a barrier coating is specified over the mortar coating.
      f. Repair in accordance with AWWA C602 and C205.

C. Stulling:
   1. 48-inch and larger diameter pipe:
      a. Install nominal 4-inch by 4-inch, 6-point wooden stulls or equivalent with nailed wooden wedges, at the quarter points, following the cure of the lining. One 4-point set shall be installed 2 feet from each end of pipe.
   2. Greater than 30-inch to 48-inch diameter pipe:

a. Install nominal 2-inch by 4-inch, 4-point wooden stulls or equivalent with nailed wooden wedges at the quarter points, following the cure of the lining.
b. Install a similar single strut 2 feet from each end of the pipe.

3. 30 Inch and smaller diameter pipe:
   a. Install 2-inch by 4-inch (nominal) stulls both ways 2 feet from the end of each pipe.
4. Keep the stulls in place during:
   a. Subsequent manufacturing process and curing.
   b. Transport to the job site.
   c. Placement in the trench for pipe 30 to 42 inches in diameter.
      1) Horizontal stulls must be removed prior to backfilling.
      2) Vertical stulls should remain in place until after the trench is backfilled.
5. Remove stulls prior to testing.
6. Temporary removal of stulls will be allowed for repairs to the lining, if required.

D. Plastic covers:
1. Attach to the ends of the pipe and fittings during curing of lining storage and shipment, and on the installation site.
   a. They may be removed just prior to installation.
2. Banding:
   a. Steel bands, or
   b. Reinforced plastic straps.
3. Temporary holes may be cut into the covers during curing or to add water to facilitate repairs.
   a. Promptly tape the holes closed after completing the curing or repair.

E. Loading, transporting, unloading and handling pipe and fittings:
1. Handle pipe in a manner and by methods that prevent damage to pipe, lining, and coatings.
2. Use padded slings and supports during handling as necessary to prevent damage.
3. Take all necessary precautions to maintain the integrity of the coating.
4. Handle pipe with proper equipment and do not push or drag along the ground.
5. Do not stack or otherwise externally load pipe such that the dimensional integrity of the joint configuration and/or roundness of the pipe may be compromised.

F. Storage:
1. Store pipe and fittings on skids, sand or dirt berms, sand bags, old tires, or other suitable means to prevent damage to pipe and fittings.
2. Store and protect pipe from damage from equipment, traffic, and vandalism.

G. Inspection:
1. Inspect pipe lining and coating immediately before installation for damage and holidays.
2. Repair damaged pipe lining and coatings or reject in accordance with specified criteria for identifying and making minor repairs.

3. Remove rejected pipe from the project site.

## PART 2 – PRODUCTS

### 2.1 SYSTEM DESCRIPTION

A. Design requirements:

1. CONTRACTOR shall design the pipe, fittings and specials in accordance with AWWA Manual M11 with the following modifications:
   a. Steel wall thickness: As designed, or minimum 1/8 inch to provide a slenderness ratio (nominal diameter divided by steel thickness) of not more than 240.
   b. Deflection of pipe and fittings: Maximum of 2 percent of pipe diameter.
   c. Working stress of steel: Maximum 50 percent of yield stress for internal working pressure; maximum 75 percent of yield strength at design pressure (including transient pressure (1.33 times working pressure); and a limiting value of 18,000 psi for design pressure.
   d. Maximum combined stresses for pipe, fittings, and specials including thrust loading shall not exceed 18,000 psi or 50 percent of the steel yield strength at the thrust design pressure.
   e. Calculate earth loads using the following formula:

      $W_T = W_C + W_l$

      the various terms have the following meaning:

      $W_T$ = Total load on pipe, pounds per linear foot of pipe.

      $W_c$ = Earth load, pounds per linear foot of pipe calculated as outlined in M11 (prism load) and using 130 pounds per cubic foot as the weight of soil or backfill.

      $W_l$ = Live loads, pounds per linear foot of pipe, as outlined in AWWA M11. Add AASHTO's H-20 loading to earth loads for all locations where pipeline is placed in an area of an existing or future street or roadway.

   f. A Bedding constant K = 0.100 and a Deflection Lag Factor of 1.0.
   g. Modulus of soil reaction E’ = 1,500 pounds per square inch where aggregate base course and E’ = 2,500 pounds per square inch where controlled low strength is indicated on the Drawings for bedding and pipe zone backfill. A combined pipe zone detail utilizing both CLSM and ABC is indicated on Drawings, **pipe manufacturer shall use E’=1,500 psi for calculations**.
   h. Design Operating Pressure = 150 psi
   i. Field Test pressure = 150 psi

j. Surge Allowance = 50 psi (surge allowance equal to 0.33 times the design operating pressure)
k. **Maximum Design Pressure = 200 psi** (shall be used for pipeline calculations)

2. Use only the area of the steel to calculate the total pipe stiffness for pipelines 42 inches in diameter and larger.
   a. Do not include the area of the lining or coating in the calculation.

## 2.2 MATERIALS

A. Steel pipe, fittings, and specials:
   1. General:
      a. Steel pipe in accordance with AWWA C200, and as specified.
      b. Fittings and specials dimensions in accordance with AWWA C208.
      c. Provide identification marks in accordance with AWWA C200.
      d. Diameter designation: The pipe diameter indicated on the Drawings is the clear inside diameter after application of the lining with a tolerance conforming to AWWA C200 and M11.

B. Manufacturers
   1. Hanson Pressure Pipe
   2. Ameron International
   3. Northwest Pipe Company

## 2.3 FABRICATION

A. Pipe segments shall be spirally formed and welded.

B. Shop fabricate steel piping fittings and specials in units as long as practicable for safe hauling and installation.
   1. Minimize number of field welds.
   2. Do not exceed 50 feet for pipe lengths.

C. Fabricate fittings and specials to uniform lengths with proper end clearance for the specified types of joint or attachment.

D. Fabricate fittings and specials to allow field assembly without cutting or special work.
   1. Do not weld flanges to nozzles until the nozzles and reinforcements are completely welded to the header.
   2. Accurately space and align flanges so that when connections have been made there will be minimal stress on the header, piping, or equipment.

E. **Identification marks**: Stenciled or otherwise shown at the top of the piping items **exterior and interior**, and include the following information:
   1. Date of manufacture of the item.
   2. Name or trademark of the manufacturer.
   3. Internal diameter in inches.

4. Lay Drawing - number of the item, sequential from initial to end station, shall match approved shop drawings.
5. NSF approval.

## 2.4 LINING - STEEL PIPE FITTING AND SPECIALS

A. General: Mortar line inside of steel pipe except where otherwise specified or indicated on the Drawings.
   1. Finish joints of fabricated steel piping fittings and specials as specified for pipe lining after field welding is complete.
   2. All materials used in the pipe lining for pipe used in potable water systems in accordance with NSF Part 61.

B. Cement mortar lining:
   1. For the inside of fabricated steel pipe fittings and specials in accordance with AWWA C205.
   2. Reinforcement: Reinforce lining of fittings and specials, 24 inches in diameter and larger with wire mesh if not cut out of straight pipe previously lined.
   3. Cement: ASTM C 150, Type II, low alkali.
   4. Sand: AWWA C205 except that the total percentage of deleterious material not exceed 3 percent.

## 2.5 COATING - STEEL PIPE, FITTINGS AND SPECIALS

A. General:
   1. The steel pipe shall be tape coated with a cement-mortar overcoat or armour coat, except when otherwise specified or indicated on the Drawings**.**
   2. Extend pipe coating for underground piping 6 inches above finish grade or 3 inches above finish floor, and neatly terminate.

B. Cement-mortar overcoat: Overcoat steel pipe in accordance with AWWA C205, modified as follows:
   1. Portland cement: ASTM C 150, Type II, low alkali.
   2. Sand: AWWA C205 except that the total percentage of deleterious material not exceed 3 percent.

C. Plastic tape wrap coating: Plastic tape wrap for exterior of steel pipe, fittings and specials in accordance with AWWA C209 and AWWA C214 as applicable.
   1. General:
      a. The tape coating system consists of the following:
         1) Primer coat, thickness per coating manufacturer recommendation (machine or brush applied).
         2) 1 layer of 20 mil inner wrap.
         3) 1 layer of 30 mil outer wrap.
         4) A second layer of 30 mil outer wrap.
      b. System thickness of 80 mils per AWWA C214.

c. All materials shall be of products of the same manufacturer.

2. Primer: One of the following or equal:
   a. Polyken Pipeline Coatings, Number 1019 or 1039 Primer.
   b. The Tapecoat Company, TC Omniprime Primer.
3. Pipe wrap:
   a. First wrap: One of the following or equal:
      1) Polyken Pipeline Coatings, Number 989-20 (932-50 for fittings).
      2) The Tapecoat Company, Tapecoat 1020B.
   b. Middle wrap: One of the following or equal:
      1) Polyken Pipeline Coatings, Number 955-30 outerwrap (955-30 for fittings).
      2) The Tapecoat Company, Tapecoat 2030B.
   c. Finish wrap: One of the following or equal:
      1) Polyken Pipeline Coatings, Number 956-30,
      2) The Tapecoat Company, Tapecoat 2030B.
4. Filler tape:
   a. Polyken 939.
   b. Or equal.
5. Joint wrap:
   a. Polyken 932-50, white Hi-Tack Joint Wrap tape.
   b. Tapecoat Company, Joint Tape.
   c. Heat-Shrinkable Sleeves, as specified below.
6. Application on welded joints:
   a. Remove sharp edges of weld spatter and slag with a file or ball peen hammer before wrapping joints.
   b. Apply plastic tape wrap in accordance with AWWA C209.
      1) Clean and prime all surfaces, then apply a wrap of 0.125 thick by 2-inch wide filler tape centered on the weld. Push and knead the tape into all voids.
   c. Apply 2 wraps of 30 mil joint tape; or the tape may be half lapped to obtain the double thickness.
   d. Finish wrap: Apply final wrapping in same manner.
   e. Wrap fittings, valves, and other odd shaped components in the pipeline with first and finish wrapping over the prime coat, total thickness of tape 80 mils.

## 2.6 STEEL PIPE JOINTS AND CONNECTIONS

A. General:
   1. Joints:
      a. Provide lap welded joints for pipelines 42 inches and larger, except as otherwise specified or indicated on the Drawings.
      b. Provide lap welded or bell and spigot type joints with rubber gaskets for pipelines 36 inches and smaller, except as otherwise specified or indicated on the Drawings.

c. Use lap joints on field-welded joints for restraint.
d. Use butt-strap joints only where required for closures or where indicated on the Drawings.
e. Provide deep bells where required for shrinkage expansion control joints.
f. Provide joints with the same or higher pressure rating as the abutting pipe.

2. Connections:
   a. Provide a flange at the project termination point for future connection and isolation by others.
   b. Make connections to existing systems using a flange isolation joint.
   c. If an existing pipeline or facility does not include a flange at or near the connection point, place an isolation flange in the first length of pipe.
   d. Use a butt-strap joint to connect the first length of pipe to the existing pipeline.

B. Bell and spigot joint rings:
   1. Rolled Carnegie shape M-3818 with rubber gaskets.
   2. Rubber gasket requirements:
      a. Minimum tensile strength, tested in accordance with ASTM D 412, between 2,000 and 2,700 pounds per square inch.
      b. Minimum elongation at rupture, tested in accordance with ASTM D 412, between 350 and 400 percent.
      c. Specific gravity, tested in accordance with ASTM D 297, between 0.90 and 1.50.
   3. Install Joint Bonding on all joints, regardless of whether cathodic protection is provided or not, electrical isolation and test stations should be provided to isolate the joints between major structures and existing pipelines.
   4. Furnish joints with recesses in the coating exposing the joint for attachment of electrical bonds, or provide factory-installed electrical bonds. Install 2 exterior electrical bonds at each joint.

C. Flanges: AWWA C207, Class D, Pressure Class 150 steel ring, and as follows:
   1. Match pipe flanges to the valve flanges.
   2. Provide a shop coating of primer on flanges and portions of pipe not covered with cement-mortar.
   3. Flange bolts and nuts: Bolts and nuts for flanges submerged in water or wastewater, buried, in wet vaults or structures, adjacent to wet walls, or above open water-containing structures shall be Type 304 stainless steel in accordance with ASTM A 193, Grade B8M for bolts and in accordance with ASTM A 194, Grade 8M for nuts.
   4. Provide washer on the nut end of each bolt to protect the flange coatings. Washer shall be of the same material as the nut.
   5. Nuts shall be Heavy hex-head, Type 2H.
   6. Cut and finish flange bolts to project a maximum of 1/4 inch beyond outside face of nut after assembly.
   7. Tap holes for cap screws or stud bolts when used.

8. Lubricant for stainless steel bolts and nuts: Provide lubricant for stainless steel bolts and nuts to prevent seizing. Lubricant shall be chloride free, Huskey FG-1800, or equal.
9. Gaskets: Gaskets shall be neoprene elastomer, compressed, with non-asbestos fiber reinforcement; Teflon ring; or Teflon envelope with non-asbestos filler. Garlock, Bluegard 3300; John Crane' similar product, or equal.

D. Welded joints:
1. Lap welded joints:
   a. Lap joints prepared for electric field welding in accordance with AWWA C206.
   b. Joint forming:
      1) Joint geometry and joint field weld will be such that no part of any field weld will be closer than 1 inch to the nearest point of tangency to the bell radius.
      2) Form bell ends by and expanding press or by being moved axially over a die in such a manner as to stretch the steel plate beyond its elastic limit to form a truly round bell of suitable diameter and shape.
   c. Provide surfaces of the bell and spigot that are essentially parallel, but in no case shall the bell slope vary by more than the maximum recommended manufacturer's deflection from the longitudinal axis of the pipe.

## PART 3 – EXECUTION

### 3.1 INSTALLATION

A. Cleaning: Thoroughly clean pipe and fittings before placement.

B. Pipe laying:
1. Lay pipe to the lines and grades indicated on the Drawings unless they are amended or supplemented by the manufacturer's tabulated lay schedule and accepted by the ENGINEER.
2. Lower pipe into the trench slowly and gently with slings or properly padded calipers.
3. Make the bell end of the pipe face the direction of laying wherever practicable.
4. Keep the pipe trench free from water which might impair the bedding or joining and welding operations.

C. Joints:
1. Gasket joints:
   a. Lubricate the spigot groove, and the first 2 inches of the bell, with a soft vegetable soap compound that is approved for use on potable water pipelines.
   b. Position the gasket in the spigot groove such that the rubber is distributed uniformly around the circumference.

c. Lay the pipes in such manner that the blockouts on the interior linings are at the spring line of the pipe to facilitate electrical connection of adjacent pipes.
d. The width of the space provided at the joint may be varied to compensate for the permissible manufacturing tolerance in pipe lengths plus or minus 1/4 inch to maintain the laying length indicated on the Drawings and lay schedule.
e. Place metal or wooden spacers against the inside shoulder of the bells.
f. Joints may be pulled on one side and most joint designs can be closed on the opposite side of pipe for long radius curves and slight changes or correction of alignment and grade.
    1) Do not exceed the pipe manufacturer recommendation on the amount of joint deflection for the type and size of the joint being used.
g. Insert a thin metal feeler gauge between the bell and spigot after the joint is assembled in order to check the position of the gasket around the complete circumference of the pipe.
h. If the gasket is not in its proper position, disassemble the joint and inspect the gasket for cuts or damage.
    1) If gasket is damaged relay the pipe with a new gasket.
    2) If the gasket is not damaged, relay the pipe.
i. Install Joint Bonding on all joints, regardless of whether cathodic protection is provided or not, electrical isolation and test stations should be provided to isolate the joints between major structures and existing pipelines.
j. Install 2 exterior bonding clips at each joint.

2. Flange joints:
    a. Flanges:
        1) Apply cement-mortar lining and coating to the steel pipe section.
        2) Coat buried flanges with Plastic Tape Wrap Coating.
    b. Flange connections between dissimilar metals such as ductile iron pipe and steel pipe, and flanged connections to existing pipe regardless of pipe material, shall be furnished with isolation bushings and washers; stainless steel bolts, nuts and washers as specified herein; and full-face flange gaskets.
3. Welded joints:
    a. Use lap type electric welded joints for field welded joints in accordance with AWWA C206. Perform field welding by welders certified by ASME Boiler and Pressure Vessel Code.
    b. Where exterior welds are performed, provide adequate space for welding and inspection of the joints.
    c. During installation of welded steel pipe in either straight alignment or on curves, lay the pipe so that at any point around the circumference of the joint there is a minimum lap of 1-1/2 inch and a minimum space of 1 inch between the end of the fillet weld or the spigot end of the pipe and the nearest tangent to a bell radius.
    d. Field welded lap joints may, at the CONTRACTOR’s option, be made on either the inside or the outside of the pipe.
    e. Prior to the beginning of the welding procedure, remove any tack welds used to position the pipe during laying.

1) Equally distribute any annular space between the faying surfaces of the bell and spigot around the circumference of the joint by shimming, jacking, or other suitable means.

f. Make weld in accordance with AWWA C206.
   1) Where more than 1 pass is required, peek to relieve shrinkage stresses on each pass except the first and final one; and remove all dirt, slag and flux before the succeeding bead is applied.

g. Place no more than a 1/8 inch of weld material on each weld pass using a combination of stitch and weave weld.

4. Restrained joints:
   a. Double fillet-welded lap joints (inside and outside) are required for areas of restrained length determined in accordance with AWWA M11 and as required for pipeline bending.
5. Shrinkage/expansion control joints:
   a. Location:
      1) At intervals not exceeding 1,000 feet along welded reaches of the pipeline, or as specified on construction drawings
      2) The first regular lap-welded field joints outside of each concrete encasement or structure.
      3) Where the shrinkage/expansion control joints occur in a traveled roadway or other inconvenient location, the location of the joint may be adjusted to a convenient location, with the approval of OWNER and ENGINEER.
      4) Contractor shall specify location of expansion joints on lay drawing, detail provided in construction drawings.
   b. Installation:
      1) Lay the pipe with an initial lap of not less than 1 inch greater than the typical lap.
      2) Install welded shrinkage control joint when:
         a) The temperature is approximately the lowest during the workday.
         b) At least 500 feet of pipe have been laid and the joints have been welded ahead of and in back of the shrinkage control joint.
         c) After backfill has been completed to at least 1 foot above the top of the pipe ahead and in back of the joint.
6. Butt-strap joints:
   a. A minimum of 10 inches wide.
   b. The same thickness as the pipe wall.
   c. Provide for a minimum of 2-inch lap at each pipe joint.
   d. Joint stress analysis will be required for restrained joint areas on pipelines 36 inches and larger.

D. Joint coating:
   1. Coat joints on mortar-coated pipe with field placed mortar. Place mortar by:
      a. Placing closed-cell polyethylene strips with cloth backing around the pipe joint:
         1) Using plastic bands at least 8 inches in width.

2) Centered and secured over the exterior joint recess.
3) Use box strapping or equivalent methods to bind the band to the pipe so that it encases the outside joint recess completely and snugly.
4) Provide an opening near the top of the joint.

b. After the band is secure, moisten the joint recess with water.
c. Mix mortar grout, consisting of 1 part Portland cement to 2 parts of sand mixed with water to the consistency of thick cream.
d. Pour mortar grout into the opening to fill the joint recess.
e. Fill the outside annular space between the ends of the adjacent pipes with the mortar grout for its full circumference.
f. Do not bed and backfill at the joint until the top opening has been closed and the mortar allowed to take initial set.
g. When using gusseted joints with electrical bonds, first moisten the joint recess and the areas over the bonding jumpers and then fill with stiff cement mortar consisting of 1 part Portland cement to 2 parts sand.
h. Encase the entire stranded copper cable in the mortar.
i. This operation should be conducted at least 2 joints from the pipe laying operations.
j. Provide a smooth finished joint.

E. Corrosion protection - steel pipe:
1. Provide corrosion monitoring and cathodic protection facilities as indicated on the Drawings.

F. Joint lining:
1. Line joints on cement mortar lined pipe by hand placing field mixed cement mortar in the joint recess to the level to provide a smooth pipe interior across the joint.
2. The joint material must be properly cured before water is placed into the pipeline.

## 3.2 FIELD QUALITY CONTROL

A. Perform field-testing as indicated on the Drawings.

B. Weld testing: Perform weld testing conforming to the following requirements:
1. Liquid penetrant testing: As soon as practicable after welding of each joint, test all single field-welded joints by the liquid penetrant inspection procedure in accordance with ASTM E 165 under Method “B” and “Leak Testing”, OR
2. Magnetic particle weld testing: As soon as practicable after welding of each joint, test all single field-welded joints by the CONTRACTOR using the magnetic particle examination procedure in accordance with ASTM E 709.
3. Air weld testing and visual inspection by a Level 4 or higher Certified Welding Inspector by a Level 4 WSI: As soon as practicable after welding of each joint, test all double lap weld joints using this procedure.
a. Test procedure:
1) Shop drill and tap two 1/4-inch NPT air test holes in the lap or bell end of the pipe.

2) Apply 40 pounds per square inch of air, or other satisfactory gas, into the connection between the 2 fillet welds.
3) Paint the welds with soap solution.
4) Mark leaks indicated by the escaping gas bubbles.

C. Test results:
1. Chip out, rebell and retest all defects.
2. Upon retest, the repaired area shall show no leaks or other defects.
3. Close the threaded openings with pipe plugs or by welding.

## 3.3 CLEANING AND DISINFECTION

A. Perform cleaning and disinfection as indicated on the Drawings and in the Specifications.

+ + END OF SECTION + +

# SECTION 15110

# GATE VALVES, OPERATORS AND APPURTENANCES

## PART 1 - GENERAL

### 1.1 DESCRIPTION

A. Scope:
   1. The Work includes, but is not necessarily limited to, all valves required for buried, exposed, submerged, and other types of piping, except where otherwise specifically included in other Sections.

### 1.2 QUALITY ASSURANCE

A. Manufacturer's Qualifications:
   1. Manufacturer shall have a minimum of five (5) years experience of producing substantially similar equipment, and shall be able to show evidence of at least five installations in satisfactory operation for at least five years.
   2. Each gate valve shall be the product of one manufacturer.

B. Reference Standards: Comply with applicable provisions and recommendations of the following, except as otherwise shown or specified.
   1. ANSI B16.1, Cast Iron Pipe Flanges and Flanged Fittings.
   2. ASTM A48, Standard Specification for Gray Iron Castings.
   3. ASTM A126, Standard Specification for Gray Iron Castings for Valves, Flanges and Pipe Fittings.
   4. ASTM A307, Standard Specification for Carbon Steel Bolts and Studs, 60,000 psi Tensile Strength.
   5. ASTM A354, Standard Specification for Quenched and Tempered Alloy Steel Bolts, Studs and Other Externally Threaded Fasteners.
   6. ASTM A436, Standard Specification for Austenitic Gray Iron Castings.
   7. ASTM A536, Standard Specification for Ductile Iron Castings.
   8. ASTM B62, Standard Specification for Composition Bronze or Ounce Metal Castings.
   9. AWWA C111, Rubber Gasket Joints for Ductile Iron and Gray Iron Pressure Pipe and Fittings.
   10. AWWA C500, Metal Seated Gate Valves for Water Supply Service.
   11. AWWA C515, Reduced-Wall, Resilient-Seated Gate Valves for Water Supply Service.
   12. AWWA C550, Protective Epoxy Interior Coating for Valves and Hydrants.
   13. AGMA Standards.

14. MAG Standard Specification 630.3, Gate Valves
15. NEMA, National Electrical Manufacturer's Association.
16. NSF/ANSI 61, Drinking Water System Components-Health Effects.

## 1.3 SUBMITTALS

A. Shop Drawings: Submit for approval the following:
   1. Manufacturer's literature, illustrations, paint certifications, specifications, detailed drawings, data, and descriptive literature on all valves and appurtenances.
   2. Deviations from Contract Documents.
   3. Engineering data including dimensions, materials, size and weight.
   4. Certificates of Compliance with AWWA Standards, where applicable.
   5. Corrosion resistance information to confirm suitability of the valve materials for the application. Information on chemical resistance of elastomers shall be furnished from the elastomer manufacturers.
   6. Special tools list.
   7. $C_v$ values and headloss curves.

B. Calculations:
   1. Sizing of operating mechanism with extension stems.
   2. Sizing of gear actuators.
   3. Sizing of anchor bolts.

C. Operation and Maintenance Manuals:
   1. Submit complete Installation, Operation, and Maintenance Manuals, including test reports, maintenance data and schedules, description of operation, and spare parts information.

D. Shop Tests:
   1. Hydrostatic tests shall be performed when required by the valve specifications included herein.

E. Certificates: Where specified or otherwise required by ENGINEER, submit test certificates.

## 1.4 PRODUCT DELIVERY, STORAGE, AND HANDLING

A. Deliver materials to the site to ensure uninterrupted progress of the Work. Deliver anchor bolts and anchorage devices, which are to be embedded in cast-in-place concrete, in ample time to not delay the Work.

B. All boxes, crates, and packages shall be inspected by CONTRACTOR upon delivery to the site. CONTRACTOR shall notify ENGINEER if any loss or

damage exists to equipment or components. Replace loss and repair damage to new condition, in accordance with manufacturer's instructions.

C. Store materials to permit easy access for inspection and identification. Keep all material off the ground using pallets, platforms, or other supports. Protect steel members and packaged materials from corrosion and deterioration.

D. Store all mechanical equipment in covered storage off the ground and prevent condensation and in accordance with the manufacturer's recommendations for long term storage.

## PART 2 - PRODUCTS

### 2.1 MATERIALS

A. General:
1. Valves shall have manufacturer's name, working pressure, and the words “DI” or “Ductile Iron” cast in raised letters on valve body.
2. Manual valve operators shall turn clockwise to close, unless otherwise specified. Valves shall indicate the direction of operation.
3. Manually operated valves, with or without extension stems, shall require not more than a 40 lb pull on the manual operator to open or close a valve against the specified criteria. The gear actuator and the valve components shall be able to withstand a minimum pull of 200 lbs on the manual operator and an input torque of 300 ft/lbs to an actuator nut. Manual operators include handwheel, chain, crank, lever, and a T-handle wrench.
4. Unless otherwise specified, all flanged valves shall have ends conforming to ANSI B16.1. The pressure class of the flanges shall be equal to or greater than specified pressure rating of the valves.
5. Iron body valves shall be provided with screwed-on seat rings. Buried or submerged gate valves shall be of the non-rising stem type. Exposed gate valves shall be rising stem type. Rising stem valves and brass non-rising stem valves shall be provided with O-ring stem seals.
6. All bolts, nuts and studs on or required to connect buried or submerged valves shall be Type 316 stainless steel.
7. For stainless steel bolting, except where nitronic 60 nuts are required, use anti-seize compound, graphite free, to prevent galling. Strength of the joint shall not be affected by the use of anti-seize compound.
8. All other bolts, nuts, and studs shall, unless otherwise approved, conform to ASTM A-307, Grade B, or ASTM A-354.
9. Bolts and nuts shall have hexagon heads and nuts.
10. All materials of construction of the valves shall be suitable for the applications as shown on the Drawings.

11. Protect wetted parts from galvanic corrosion due to contact of two different metals.
12. Buried service valves shall be provided with grease filled actuators with position indicators.
13. Gasket material and installation shall conform to manufacturer's recommendations.
14. Identification: Identify each valve 3-inches and larger with a stainless steel nameplate stamped with the approved designation. Nameplate shall be permanently fastened to valve body at the factory. Stenciled designations are acceptable for buried valves.
15. Valves shall meet all requirements of NSF 61.

B. Gate Valves:
1. Exposed, 3-inch Diameter and Larger:
   a. Standard: AWWA C515 and as specified herein
   b. Type: Resilient seat, non-rising stem.
   c. Construction:
      1) Body and Bonnet: Ductile iron, ASTM A-536, coated inside and out with fusion bonded epoxy.
      2) Gate: Ductile iron, ASTM A-536, symmetrically and fully encapsulated with an elastomer having a minimum 1/8-inch thickness suitable for the service intended.
      3) Stem: Stainless steel.
      4) Stem Seal: O-ring.
      5) All internal and external bolting and other hardware including pins, set screws, plug, studs, bolts, nuts and washers: Type 316 stainless steel.
      6) Provide position indicators for non-rising stem valves.
   d. Pressure Rating: Gate valves shall have the following minimum pressure ratings.
      1) 3-inch Through 16-inch Diameter Valves: 250 lbs per square inch.
      2) Greater Than 16-inch Diameter Valves: 150 lbs per square inch.
   e. End Connection: Unless otherwise shown on the Drawings or specified valves shall be flanged ends conforming to ANSI B16.1, class 125.
   f. Interior Coating:
      1) All valves shall be coated inside. The steel, cast iron, and ductile iron surfaces, except machined surfaces, shall be epoxy coated in accordance with AWWA C550.
   g. Testing:
      1) Test all valves in conformance with AWWA C515.
   h. Gear Actuators for Manually Operated Valves:
      1) Provide valves with gear actuators conforming with AWWA C500.
      2) Gate valves having a diameter greater than 12-inches shall have a spur gear for vertical valve installation.

3) Size gear actuators for the following maximum differential pressures:
   a) Maximum Differential Pressure Across Closed Valve: 150 psi.

i. Product and Manufacturer: Provide one of the following:
   1) City of Chandler, Pre-Approved list

2. Buried, 3-inch Diameter and Larger:
   a. Standard: AWWA C509.
   b. Type: Resilient seat, nonrising stem.
   c. Construction:
      1) Body and Bonnet: Ductile Iron, ASTM A 536, coated inside and out with fusion bonded epoxy.
      2) Gate: Ductile Iron, ASTM A 536, symmetrically and fully encapsulated with an elastomer having a minimum 1/8-inch thickness suitable for the service intended.
      3) Stem: Stainless Steel.
      4) Stem Seal: "O"-Ring.
      5) All internal and external bolting and other hardware including pins, set screws, plug, studs, bolts, nuts and washers: Type 316 stainless steel.
      6) Provide position indicators for non-rising stem valves.
   d. Pressure Rating: Gate valves shall have the following minimum pressure ratings unless otherwise specified in the Valve Schedule.
      1) 3-inch through 16-inch diameter valves: 250 pounds per square inch.
      2) Greater than 16-inch diameter valves: 150 pounds per square inch.
   e. End Connection: Unless otherwise shown on the Drawings or specified valves shall be mechanical joint ends conforming to AWWA C111.
   f. Interior Coating:
      1) All valves shall be coated inside. The steel, cast-iron and ductile iron surfaces, except machined surfaces, shall be epoxy coated in accordance with AWWA C550.
   g. Testing:
      1) Test all valves in conformance with AWWA C509.
   h. Gear Actuators for Manually Operated Valves:
      1) Provide valves with gear actuators conforming AWWA C500.
      2) Size gear actuators for the following maximum differential pressures:
         a) Maximum Differential Pressure Across Closed Valve: 150.
   i. Product and Manufacturer: Provide one of the following:
      1) See City of Chandler, Pre-Approved list

## 2.2 APPURTENANCES

A. Wrench Nuts:

1. Provide wrench nuts on all buried valves of nominal 2-inch size conforming to AWWA C500.
2. Arrow indicating direction of opening the valve shall be cast on the nut along with the word "OPEN".
3. Material: Ductile iron.
4. The nut shall be secured to the stem by mechanical means.

## 2.3 ANCHOR AND MISCELLANEOUS MOUNTING BOLTS

A. All bolts, nuts, and washers for connection of the valve appurtenances to concrete structure or other structural members shall be obtained from the valve manufacturer, and shall be of ample size and strength for the purpose intended. Anchor bolts shall be hooked or adhesive type and shall be Type 316 stainless steel.

B. Provide anchor bolts for stem guides of required strength to prevent twisting or sagging of the guides under load.

C. Provide bolts and washers of Type 316 stainless steel and nuts of nitronic 60. The bolts shall have rolled threads and both bolts and nuts shall be electropolished to remove burrs.

D. Minimum Size of Anchor Bolts: 5/8-inch.

## 2.4 TOOLS AND SPARE PARTS

A. Tools
   1. Provide the Following T-Handle Operating Wrenches for Exposed Valves:
      a. Length of T-Handle Operating Wrench: 5 feet.
      b. Quantity: 2.

B. Spare Parts
   1. Provide the Following Spare Parts for valves over 24-inches:
      a. Upper Stem O-ring - Quantity: 2
      b. Lower Stem O-ring - Quantity: 2
      c. Valve Stem - Quantity: 1
      d. Thrust Washers - Quantity: 2
      e. Wedge - Quantity: 1

## 2.5 SURFACE PREPARATION AND PAINTING

A. Valves, appurtenances, etc., shall receive shop primer and shop finish coating conforming to the requirements of MAG Specification 630.3, Gate Valves. If any

damage to the paint system occurs, the equipment shall be repainted as directed by the ENGINEER.

B. Surface preparation and painting shall conform to the requirements of MAG Specification 630.3, Gate Valves.

C. All gears, bearing surfaces, machined surfaces, and other surfaces which are to remain unpainted shall receive a heavy application of grease or other rust-resistant coating. This coating shall be maintained during storage and until the equipment is placed into operation.

D. CONTRACTOR shall certify, in writing, that the shop primer and shop finish coating system conforms to the requirements of MAG Specification 630.3, Gate Valves.

+ + END OF SECTION + +

# SECTION 15119

# SPECIALTY VALVES AND APPURTENANCES

## PART 1 - GENERAL

### 1.1 DESCRIPTION

A. Scope:
1. Provide all labor, materials, equipment and incidentals required to furnish and install all specialty valves and appurtenances complete and operational as shown on the Drawings and as specified.
2. The Work includes, but is not necessarily limited to, all types of valves required for buried, exposed, submerged and other types of piping, except where otherwise specifically included in other Sections.

B. Coordination:
1. Review installation procedures under other Sections and coordinate with the Work which is related to this Section including buried piping installation, exposed piping installation, site utilities, insulation, heating, ventilating and air conditioning and plumbing.

### 1.2 QUALITY ASSURANCE

A. Manufacturer's Qualifications:
1. Manufacturer shall have a minimum of five years experience of producing substantially similar equipment, and shall be able to show evidence of at least five installations in satisfactory operation for at least five years.
2. Each type of specialty valve shall be the product of one manufacturer.

B. Reference Standards: Comply with applicable provisions and recommendations of the following, except as otherwise shown or specified.
1. ANSI A13.1, Scheme for Identification of Piping Systems.
2. ANSI/ASME A112.1.2, Air Gaps in Plumbing Systems.
3. ANSI B16.1, Cast Iron Pipe Flanges and Flanged Fittings.
4. ANSI B16.4, Cast Iron Fittings.
5. ANSI B40.1, Gauges-Pressure Indicating Dial Type-Elastic Element.
6 ASTM A 48, Specification for Gray Iron Castings.
7. ASTM A 126, Specification for Gray Iron Castings for Valves, Flanges and Pipe Fittings.
8. ASTM A 240, Specification for Heat-Resisting Chromium and Chromium-Nickel Stainless Steel Plate, Sheet and Strip for Pressure Vessels.
9. ASTM A 307, Specification for Carbon Steel Bolts and Studs, 60,000 psi Tensile Strength.

10. ASTM A 354, Specification for Quenched and Tempered Alloy Steel Bolts, Studs and Other Externally Threaded Fasteners.
11. ASTM A 436, Specification for Austenitic Gray Iron Castings.
12. ASTM A 536, Specification for Ductile Iron Castings.
13. ASTM B 62, Specification for Composition Bronze or Ounce Metal Castings.
14. ASTM D 1784, Specification for Rigid Poly (Vinyl Chloride) PVC Compounds and Chlorinated Poly (Vinyl Chloride) CPVC compounds.
15. ASTM D 1785, Specification for Poly (Vinyl Chloride) (PVC) Plastic Pipe, Schedulers 40, 80 and 120.
16. AWWA C111, Rubber-Gasket Joints for Ductile-Iron and Gray-Iron Pressure Pipe and Fittings.
17. AWWA C500, Gate Valves for Water and Sewerage Systems.
18. AWWA C502, Dry-Barrel Fire Hydrants.
19. AWWA C503, Wet-Barrel Fire Hydrants.
20. AWWA C506, Backflow Prevention Devices - Reduced Pressure Principle and Double Check Valve Types.
21. AWWA C507, Ball Valves, 6-Inch Through 48-Inch.
22. AWWA C508, Swing Check Valves for Waterworks Service, 2-inch through 24-inch NPS.
23. AWWA C509, Resilient-Seated Gate Valves, 3 through 12 NPS, for Water and Sewerage Systems.
24. AWWA C512 Air-Release, Air/Vacuum and Combination Air Valves for Water Works Service
25. AGMA Standards.
26. ASSE 1003, Water Pressure Reducing Valves.
27. NEMA, National Electrical Manufacturer's Association.

## 1.3 SUBMITTALS

A. Shop Drawings: Submit for approval the following:
   1. Manufacturer's literature, illustrations, paint certifications, specifications, detailed drawings, data and descriptive literature on all valves and appurtenances.
   2. Deviations from Contract Documents.
   3. Engineering data including dimensions, materials, size and weight.
   4. Fabrication, assembly, installation and wiring diagrams.

B. Operation and Maintenance Manuals:
   1. Submit complete installation, operation and maintenance manuals including test reports, maintenance data and schedules, description of operation, and spare parts information.
   2. Furnish Operation and Maintenance Manuals in conformance with the requirements of Section 01781, Operation and Maintenance Data.

C. Shop Tests:

1. Test motor operated valves before shipment to ensure that the mechanisms can close the valves in the specified time limit, and for proper seating.
2. Hydrostatic tests shall be performed, when required by the valve specifications included herein.

D. Certificates:
1. Where specified or otherwise required by ENGINEER, submit test certificates.

## 1.4 PRODUCT DELIVERY, STORAGE AND HANDLING

A. Deliver materials to the site to ensure uninterrupted progress of the Work. Deliver anchor bolts and anchorage devices, which are to be embedded in cast-in-place concrete, in ample time to not delay the Work.

B. All boxes, crates and packages shall be inspected by CONTRACTOR upon delivery to the site. Notify ENGINEER if any loss or damage exists to equipment or components. Replace loss and repair damage to new condition, in accordance with manufacturer's instructions.

C. Store materials to permit easy access for inspection and identification. Keep all material off the ground, using pallets, platforms or other supports. Protect steel members and packaged materials from corrosion and deterioration.

D. Store all mechanical equipment in covered storage off the ground and prevent condensation and in accordance with the manufacturer's recommendations for long term storage.

# PART 2 - PRODUCTS

## 2.1 MATERIALS

A. General:
1. Valves shall have manufacturer's name and working pressure cast in raised letters on the valve body or on a stainless steel manufacturer's nameplate stamped with the approved designation and permanently attached to the valve body.
2. Manual valve operators shall turn clockwise to close, unless otherwise specified. Valves shall indicate the direction of operation.
3. Unless otherwise specified, all flanged valves shall have ends conforming to ANSI B16.1. The pressure class of the flanges shall be equal to or greater than the specified pressure rating of the valves.
4. Buried valves shall have flanged ends with mechanical joint adapters and installed with a flanged adapter or have grooved mechanical couplings. All bolts shall be Type 316 stainless steel.

5. Buried valves shall be provided with adjustable two piece valve boxes and provided with extension stems, operating nuts and covers, unless otherwise shown or specified. Extension stems shall terminate 12-inches below finished grade.
6. All bolts, nuts and studs on or required to connect buried or submerged valves shall be Type 316 stainless steel.
7. All bolts and studs embedded in concrete and studs required for wall pipe shall be of Type 316 stainless steel.
8. For stainless steel bolting, except where Nitronic-60 nuts are required, use anti-seize compound, graphite free, to prevent galling. Strength of the joint shall not be affected by the use of anti-seize compound.
9. All other bolts, nuts and studs shall, unless otherwise approved, conform to ASTM A 307, Grade B; or ASTM A 354.
10. Bolts and nuts shall have hexagon heads and nuts.
11. Gasket material and installation shall conform to manufacturer's recommendations.
12. Identification: Identify each valve 4-inches and larger with a stainless steel manufacturer's nameplate stamped with the approved designation. Manufacturer's nameplate shall be permanently fastened to valve body at the factory. Stenciled designations are acceptable for buried valves.
13. All materials of construction of the valves shall be suitable for the applications as shown on the Drawings.
14. Protect wetted parts from galvanic corrosion due to contact of two different metals.

B. Strainers:
1. Two-inches and smaller, screwed; 2-1/2-inches and larger, flanged.
2. Body: 125 lbs.
3. Screen:
   a. Type 316 stainless steel.
   b. Free area not less than 2-1/2-inches times inlet area.
   c. Perforations: 1/16-inch.
   d. Construction:
      1) Screen wire gage to suit size and service.
      2) Reinforcement.
4. Strainers for seal or flushing water connections shall be (--1--) with screwed ends. Strainers shall be self-cleaning wye type design, with Type 316 stainless steel mesh screens.

C. Angle Hose Valves:
1. Angle hose valves shall be suitable for 150 psi water pressure, with cast brass body and brass handwheel, end threaded female outlet, opening counter-clockwise.
2. Product and Manufacturer: Provide one of the following:
   a. Potter-Roemer Incorporated.
   b. Or equal.

D. Hose Bibbs, Pipe Drains:
   1. Valve:
      a. Type: Boiler drain globe valve, chrome plated.
      b. Material: Bronze body, screwed bonnet, renewable composition disc.
      c. End Connections: Hose thread outlet, male pipe thread or sweat inlet.
      d. Rating: 125 lbs. WOG.
   2. Vacuum Breaker:
      a. Type: Non-removable, atmospheric.
      b. Materials: Brass body, stainless steel trim, silicone rubber diaphragm and disc.
      c. End Connections: Hose thread inlet and outlet.
   3. Product and Manufacturer: Provide one of the following:
      a. Woodford Manufacturing Co.
      b. Nibco Incorporated.
      c. Or Approved Equal.

E. Quick Coupler Connections:
   1. Type: Cam arms lock into adaptor groove.
   2. Materials: Adaptor and Coupler:
      a. Body: Stainless steel.
      b. Cam arms: Stainless steel.
      c. Gaskets: Buna N.
   3. Ends: Socket weld quick connect adaptor for connection to copper tubing; hose shank quick connect coupler.
   4. Reference: MIL-C-27487.
   5. Product and Manufacturer: Provide one of the following:
      a. Dover Corp.; OPW “Kamlok” (--1--) series.
      b. Or equal.

F. Combination Air Valves:
      a. Purpose: Combination valves are designed to automatically exhaust large quantities of air during pipeline filling, and to admit large quantities of air when the internal pressure drops below atmospheric and automatically release small pockets of air from a pipeline under pressure like an air release valve.
      b. Operation: Float actuated valve with large orifice exhausts or admits air from the system, with small venting orifice discharges accumulated air or vapor to atmosphere with the system under pressure.
      c. Valve shall be designed to operate in a pressurized sewer environment.
      d. Construction:
         1) Body Configuration: Single or Dual-Body.
         2) Body, Cover: Type 316 Stainless Steel.
         3) Float: Type 316 Stainless Steel ASTM A240.
         4) O-Ring: EPDM.
         5) Trim: Type 316 Stainless Steel ASTM A240.
         6) Outlet Size/Conn: Inlet shall be 2-inch, (threaded, flanged) unless

otherwise shown on the Drawings.

7) Outlet Size/Conn: Size and connection (threaded, flanged, hooded) as shown on drawings.

e. Product and Manufacturer: Provide one of the following:
   1) ARI
   2) or approved equal

## 2.2 SURFACE PREPARATION AND PAINTING

A. Valves, appurtenances, etc., shall receive shop primer and shop finish coating conforming to the requirements of Section 09905, Painting and Protective Coating. If any damage to the paint system occurs, the equipment shall be repainted as directed by the ENGINEER.

B. Surface preparation and painting shall conform to the requirements of Section 09905, Painting and Protective Coating.

C. All bearing surfaces, machined surfaces and other surfaces which are to remain unpainted shall receive a heavy application of grease or other rust-resistant coating. This coating shall be maintained during storage and until the equipment is placed into operation.

D. Certify, in writing, that the shop primer and shop finish coating system conforms to the requirements of Section 09905, Painting and Protective Coating.

# PART 3 - EXECUTION

## 3.1 INSTALLATION

A. Install all valves and appurtenances in accordance with manufacturer's instructions and recommendations.

B. Install all valves so that operating handwheels or wrenches may be conveniently turned from operating floor but without interfering with access, and as approved by ENGINEER.

C. Unless otherwise approved by the ENGINEER, install all valves plumb and level. Install valves free from distortion and strain caused by misaligned piping, equipment or other causes.

## 3.2 FIELD TESTS AND ADJUSTMENTS

A. Adjust all parts and components as required to provide correct operation.

B. Conduct functional field test of each valve in presence of ENGINEER to demonstrate that each part and all components together function correctly.

+ + END OF SECTION + +

# SECTION 15120

# PIPING SPECIALTIES AND ACCESSORIES

## PART 1 - GENERAL

### 1.1 DESCRIPTION

A. Scope:
   1. Provide all labor, materials, equipment and incidentals as shown on the Drawings, specified and required to furnish and install all piping specialties and accessories. Included, but not limited to, are: flexible couplings, mechanical couplings, flanged and harnessed adapters, and expansion joints.

### 1.2 QUALITY ASSURANCE

A. Manufacturer's Qualifications:
   1. Manufacturer shall have a minimum of five years experience of producing substantially similar types of piping specialties specified and shall be able to show evidence of at least five installations in satisfactory operation for at least five years.
   2. Each type of piping specialty and accessory shall be the product of one manufacturer.

### 1.3 SUBMITTALS

A. Shop Drawings: Submit for approval the following:
   1. Detailed drawings and data on each type of coupling, adaptor and expansion joint to be furnished. Submit and coordinate these with Shop Drawings required for piping systems. Comply with requirements of Section 01330, Submittals, and Section 01332, Shop Drawing Procedures.

### 1.4 PRODUCT DELIVERY, STORAGE AND HANDLING

A. Refer to Section 15051, Buried Piping Installation, and Section 15052, Exposed Piping Installation.

## PART 2 - PRODUCTS

### 2.1 MATERIALS

A. Couplings: Unless otherwise specified, piping 2-inches in diameter and larger passing from concrete to earth shall be provided with two pipe couplings or flexible

joints as specified within 2-feet or one pipe diameter of the structure, whichever is greater.

1. Sleeve Type, Flexible Couplings:
   a. Pressure and Service: Same as connected piping.
   b. Material: Carbon steel for carbon steel and exposed ductile iron piping systems, or stainless steel for stainless steel and buried or submerged ductile iron piping systems.
   c. Gasket: Suitable for wastewater service, or high temperature air service.
   d. Bolts and Nuts: Alloy steel, corrosion-resistant, prime coated. Buried couplings shall have Type 316 stainless steel bolts and nuts.
   e. Harnessing:
      1) Harness couplings to restrain pressure piping. Test pressures for pressure pipelines shall conform to the requirements of Section 15050, Piping Systems.
      2) Adjacent flanges shall be tied with bolts of corrosion resistant alloy steel. Provide flange mounted stretcher bolt plates as shown on the Drawings and to be designed by manufacturer, unless otherwise approved by the ENGINEER.
      3) Conform to dimensions, size, spacing and materials for lugs, bolts, washers and nuts as recommended by manufacturer and approved by ENGINEER for the pipe size, wall thickness and test pressure required. However, the following minimum bolting shall be provided, unless otherwise approved by the ENGINEER.

| Pipe Diameter (Inches) | Number of Bolts | Bolt Diameter (Inches) | At (Degrees) |
|---|---|---|---|
| 4 | 2 | 5/8 | 180 |
| 6-8 | 2 | 3/4 | 180 |
| 10-12 | 2 | 7/8 | 180 or 250 |
| 14-20 | 4 | 1 | 190 |
| 24-48 | 4 | 1 | 90 |
| 54 | 4 | 1 | 250 |
| 60 | 4 | 1-1/4 | 90 |

   f. Remove pipe stop, unless otherwise shown on the Drawings or specified.
   g. Product and Manufacturer: Provide one of the following:
      1) Romac
      2) Rockwell International.
      3) Ford FC2A
      4) Or equal.
2. Flanged Adapters:
   a. Description: One end of adapter shall be flanged and the other end shall have a sleeve type flexible coupling.
   b. Pressure and Service: Same as connected piping.
   c. Material: Cast iron or steel.
   d. Gasket suitable for wastewater and digester gas service and can withstand the specified temperature. EPDM gaskets for 250°F air service.

e. Bolts and Nuts: Type 316 stainless steel.
f. Harnessing:
   1) Harness adapters to restrain pressure piping. Test pressures for pressure pipelines shall conform to the requirements of Section 15050, Piping Systems.
   2) For adapters 12-inch diameter and less, provide 1/2- inch minimum stainless steel anchor studs installed in a pressure tight anchor boss. Provide number of studs required to restrain test pressure and service conditions. Harness shall be as designed and recommended by manufacturer; however, the following minimum anchor studs shall be provided, unless otherwise approved by ENGINEER.
      a) 6-inch diameter and less: Two.
      b) 8-inch diameter and less: Four.
      c) 10-inch diameter and less: Six.
      d) 12-inch diameter and less: Eight.
   3) For adapters larger than 12-inch diameter, provide split-ring harness clamps with a minimum of four Type 316 stainless steel bolts. Harness assembly shall be as designed and recommended by manufacturer. Dimensions, sizes, spacings and materials shall be suitable for service and conditions encountered and shall be approved by ENGINEER.
   4) Harness couplings to restrain pressure piping.
   5) Test pressures for pressure pipe lines shall conform to the requirements of Section 15050, Piping Systems.
   6) Harnessing shall conform to the details shown on the Drawings.
g. Product and Manufacturer: Provide one of the following:
   1) Dresser Industries.
   2) Rockwell International.
   3) Or equal.

B. Dielectric Connections:
   1. Where a dissimilar metals ate connected, an insulating section of rubber or plastic pipe shall be provided. The insulating section shall have a minimum length of 12 pipe diameters. Dielectric unions may be used instead of the specified insulating sections.
   2. Product and Manufacturer: Provide one of the following:
      a. EPCO.
      b. Capitol Manufacturing.
      c. Or equal.

C. Materials or products which contact drinking water as part of a water treatment process or water supply system including but not limited to pipe, gaskets, fittings, linings, coatings, etc., must Comply with National Sanitation Foundation (NSF-61) and Arizona Administration Code requirements as stated in Specification Section 01420 – References.

## 2.2 PAINTING

A. Clean and shop prime and shop finish coat ferrous metal surfaces of equipment in accordance with the requirements of Section 09905, Painting and Protective Coating.

B. Coat machined, polished and non-ferrous surfaces and similar unpainted surfaces with corrosion prevention compound which shall be maintained during storage and until equipment begins operation.

C. Field painting shall conform to the requirements of Section 09905, Painting and Protective Coating .

# PART 3 - EXECUTION

## 3.1 INSTALLATION

A. Install piping specialties and accessories in accordance with manufacturer's instructions and recommendations.

B. Make adjustments to expansion joints as required to ensure that they will be fully extended when the ambient temperature is at minimum operating temperature and fully compressed at maximum operating temperature for the system in which they are installed.

+ + END OF SECTION + +

# SECTION 15121

# WALL PIPES, FLOOR PIPES AND PIPE SLEEVES

## PART 1 - GENERAL

### 1.1 DESCRIPTION

A. Scope:
   1. CONTRACTOR shall provide all labor, materials, equipment and incidentals as shown on the Drawings, specified and required to furnish and install all floor pipes, pipe sleeves, wall pipes, other wall pieces, and escutcheons to complete the Work.

### 1.2 QUALITY ASSURANCE

A. Reference Standards: Comply with applicable provisions and recommendations of the following, except as otherwise shown or specified.
   1. ANSI B16.1, Cast-Iron Pipe Flanges and Flanged Fittings.
   2. ANSI B16.4, Cast-Iron Threaded Fittings.
   3. AWWA C104 (ANSI A21.4), Cement-Mortar Lining for Ductile Iron Pipe and Fittings for Water.
   4. AWWA C106 (ANSI A21.6), Cast Iron Pipe Centrifugally Cast in Metal Molds, for Water and Other Liquids.
   5. AWWA C110 (ANSI A21.10), Ductile Iron and Gray Iron Fittings, 3-in. Through 48-in., for Water and Other Liquids.
   6. AWWA C111 (ANSI A21.11), Rubber-Gasket Joints for Ductile Iron and Gray-Iron Pressure Pipe and Fittings.
   7. AWWA C115 (ANSI A21.15), Flanged Ductile Iron and Gray Iron Pipe with Threaded Flanges.
   8. AWWA C151 (ANSI A21.51), Ductile Iron Pipe, Centrifugally Cast in Metal Molds or Sand-Lined Molds, for Water or Other Liquids.
   9. AWWA C200, Steel Water Pipe 6-Inches and Larger.

### 1.3 SUBMITTALS

A. Shop Drawings: Submit for approval the following:
   1. Detailed drawings and data on all wall and floor pipe, and pipe sleeves. Submit and coordinate these with Shop Drawings required for all piping systems.

### 1.4 PRODUCT DELIVERY, STORAGE AND HANDLING

A. Refer to Section 15051, Buried Piping Installation and Section 15052, Exposed Piping Installation.

## PART 2 - PRODUCTS

### 2.1 MATERIALS

A. Wall and Floor Pipes:
   1. Material: Same as specified for the piping connected to wall or floor pipe, unless otherwise approved by ENGINEER.
   2. Length: Wall fittings shall be equal to the thickness of the wall in which they are installed plus the exterior projection required for connection.
   3. End Connections: As shown on the Drawings or approved by the ENGINEER.
   4. Thickness: Same as specified for the piping connected to wall or floor pipe, except for stainless steel piping.
   5. Collars: Provide collars at mid-point of wall for anchorage and water tightness.
   6. Pipes ends shall be flush with wall face, unless otherwise shown on the Drawings.
   7. Flanged ends and mechanical joint bells shall be drilled and tapped for studs. Provide studs of same material as connected piping, except submerged and buried studs shall be of Type 316 stainless steel.
   8. Steel pipe which is cast into walls or floors shall have a collar at mid-point of wall for anchorage and water tightness, as shown on the Drawings or as required.

B. Pipe Sleeves:
   1. Ferrous and Plastic Pipe: Use standard weight steel pipe with integral wall collar continuously welded to mid-point of sleeve for anchorage and water tightness, unless otherwise shown on the Drawings.
   2. Copper Pipe: Use Type K hard drawn copper pipe, unless otherwise shown on the Drawings.
   3. Size sleeves to provide annular space required to accommodate mechanical link-type seals that are used.
   4. Buried steel pipe sleeves shall comply with Section 15102, Steel Pipe.

C. Cast Wall Sleeves:
   1. Material: Ductile iron furnished with integral wall collar.
   2. Dimensions: As required for pipe to pass through sleeve. Length as required.

D. Mechanical Seals: Provide link-type mechanical seals in pipe sleeves with adjusting bolts suitable for 20 psi working pressure.
   1. Type: Mechanical seals through non-fire rated walls or floors:
      a. Pressure Plate: Glass reinforced nylon plastic.
      b. Bolts and Nuts: 18-8 stainless steel.

c. Sealing Element: EPDM rubber.

2. Type: Mechanical seals through fire-rated walls or floors; two independent mechanical seal assemblies required:
   a. Pressure Plate: Low carbon steel, galvanized.
   b. Bolts and Nuts: Low carbon steel, galvanized.
   c. Sealing Element: Silicone rubber.
3. Type: Mechanical seals through buried steel sleeves:
   a. Pressure Plate: Composite.
   b. Bolts and Nuts: Type 316 Stainless Steel.
   c. Sealing Element: EPDM rubber.
4. Product and Manufacturer: Provide one of the following:
   a. Thunderline Corporation.
   b. Or equal.

E. Wall and Ceiling Plates:
1. Bare pipes passing through walls and ceilings in finished rooms: Provide escutcheon plates of chrome plated steel, clevis or split ring and hinged with set screws.
2. Insulated pipes passing through walls, floors, and ceilings in finished rooms: Provide plated escutcheon plates of 18 gage chrome plated steel.

## PART 3 - EXECUTION

### 3.1 INSTALLATION

A. Wall and Floor Pipes: Install as shown on the Drawings and in accordance with approved Shop Drawings and manufacturer's recommendations.

B. Pipe Sleeves:
1. Use sleeves wherever pipes pass through walls, partitions, floors, and roofs, unless otherwise shown on the Drawings.
2. All sleeves through floor slabs in process areas shall extend a minimum of 2-inches above finished floor.
3. All sleeves through floor slabs in finished areas shall extend a maximum of 1/4-inch above finished floor.
4. Anchor sleeves to concrete and masonry walls as shown on the Drawings or otherwise approved by the ENGINEER.
5. Sleeves through walls shall be flush with wall face.
6. All pipe joints and annular spaces in exterior walls or walls subjected to hydrostatic pressure shall be completely watertight.
7. For mechanical seals size sleeves to provide annular space required to suit link-type mechanical seals that are provided.
8. Do not install sleeves and pipes through structural members, unless specifically shown on the Drawings and approved by the ENGINEER. Such sleeves, if required, shall be Schedule 40, steel pipe or approved seamless steel tubing.

9. Size sleeves to provide annular space as follows:

| Pipe Size | Sleeve ID Minus Pipe or Insulation OD |
|---|---|
| Less than 2-inches | 1/2-inch to 3/4-inch |
| 2-inches to 4-inches | 3/4 inches to 1-1/4-inch |
| 6-inches to 12-inches | 1-1/4 inches to 2-inches |
| Over 12-inches | 2-inches to 3-inches |

10. Seal annular spaces between pipe and sleeve, material and installation shall be as specified in Section 07920, Calking and Sealants.
11. Buried pipe sleeves shall have mechanical seals at each end.

C. Install wall and ceiling plates in accordance with the manufacturer's recommendations and the approved Shop Drawings.

+ + END OF SECTION + +

# CITY OF CHANDLER, ARIZONA

## MUNICIPAL UTILITIES DEPARTMENT

# LARGE VALVE REPLACEMENT

## PROJECT NO. WA1504.401

### JUNE 2015

Chandler + Arizona
*Where Values Make The Difference*

**MAYOR**
JAY TIBSHRAENY

**VICE MAYOR**
KEVIN HARTKE

**COUNCIL**
NORA ELLEN
RICK HEUMANN
RENE LOPEZ
TERRY ROE
JACK SELLARS


**CITY OF CHANDLER**
**MUNICIPAL UTILITIES DEPARTMENT**
975 E. ARMSTRONG WAY
BUILDING L
CHANDLER, AZ 85286
PHONE NO. (480) 782-3800


## BENCHMARK:

POINT 5000 FOUND CITY OF CHANDLER BENCHMARK NO 35B: SECTION 2, T2S, R5E, 3" CITY OF CHANDLER BRASS CAP IN CONCRETE, FLUSH, AT THE INTERSECTION OF CANYON OAKS WAY AND DERRINGER WAY; 660' WEST OF COOPER RD AND 280' SOUTH OF PECOS RD. (NORTHING, 8335859.554, EASTING, 732956.040).
CITY OF CHANDLER DATUM (NGVD 29) = NAVD88 -1.709'
NGVD '29 PUBLISHED ELEVATION = 1232.64
NAVD '88 PUBLISHED ELEVATION = 1234.35
OBSERVED ELEVATION = 1232.60

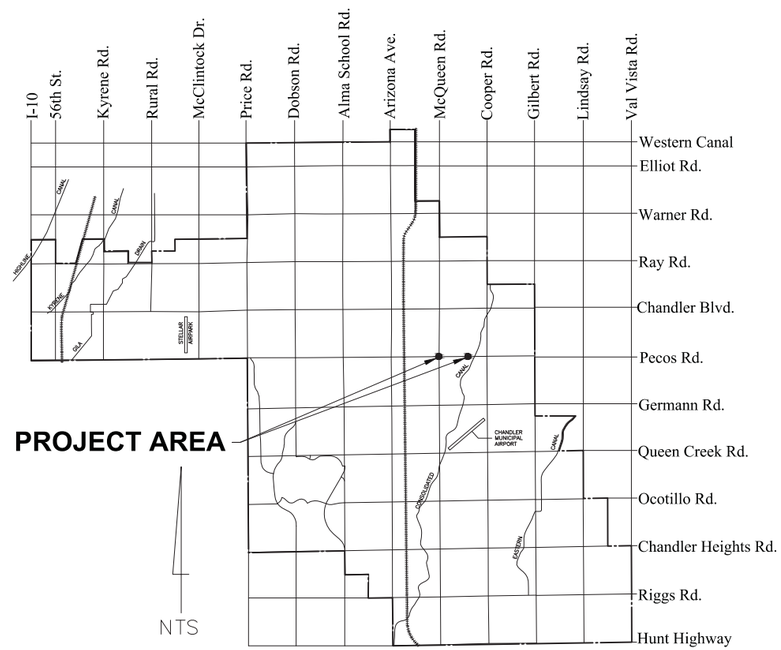


## VICINITY MAP

| UTILITY CONTACTS | DATE SUBMITTED | CONTACT NAME | CONTACT INFORMATION |
|---|---|---|---|
| APS | 6/5/2015 | SUSAN LIPE | 602.493.4124 |
| AT&T | 6/5/2015 | JOE FORKERT | 714.963.7964 |
| CENTURYLINK | 6/5/2015 | ROXANNE CHITWOOD | 480.768.7294 |
| COX | 6/5/2015 | KIRSTEN VELDMAN | 623.328.3425 |
| KINDER MORGAN | 6/5/2015 | KARLY PAYNE | 714.560.4604 |
| SPRINT | 6/5/2015 | COLIN SWORD | 602.430.3615 |
| SRP POWER | 6/5/2015 | ANDRE BENAVIDEZ | 602.236.5527 |
| SW GAS | 6/5/2015 | DEAN PODHADSKY | 602.484.5431 |

## SHEET INDEX


| DWG NO. | SHEET NO. | DESCRIPTION |
|---|---|---|
| | 1 | COVER SHEET |
| G1 | 2 | LEGEND & ABBREVIATIONS |
| G2 | 3 | GENERAL NOTES |
| G3 | 4 | KEY MAP |
| G4 | 5 | SURVEY CONTROL |
| D1 | 6 | DEMOLITION PLAN |
| PP1 | 7 | PLAN & PROFILE – PECOS ROAD |
| PP2 | 8 | PLAN & PROFILE – FIRE STATION ENTRANCE |
| PP3 | 9 | PLAN & PROFILE – LATERAL PIPING |
| CD1–CD3 | 10–12 | CIVIL DETAILS |


"IN ACCORDANCE WITH AAC R18–4–213, ALL MATERIALS INSTALLED AFTER JANUARY 1, 1993 WHICH MAY COME INTO CONTACT WITH DRINKING WATER SHALL CONFORM TO NATIONAL SANITATION FOUNDATION STANDARD 60 & 61." ALL POTABLE WATERLINES AND FITTINGS SHALL HAVE A NSF–PW SEAL. ALL MATERIALS SHALL BE LEAD FREE AS DEFINED IN AAC R18–5–504 AND R18–4–101.

## APPROVED:

| | |
|---|---|
| TRANSPORTATION & DEVELOPMENT DIRECTOR | DATE |
| CITY ENGINEER | DATE |
| DEVELOPMENT SERVICES ENGINEER | DATE |
| MARICOPA COUNTY ENVIRONMENTAL SERVICE DEPARTMENT (AS REQUIRED) | DATE |
| FLOOD CONTROL DISTRICT OF MARICOPA COUNTY (AS REQUIRED) | DATE |

I HEREBY CERTIFY THAT THE "AS-BUILT" INFORMATION AS SHOWN HEREON WAS MADE UNDER MY SUPERVISION, OR AS NOTED, AND IS CORRECT TO THE BEST OF MY KNOWLEDGE AND BELIEF.

REGISTERED LAND SURVEYOR | REGISTRATION NO. | DATE
FIRM NAME:

I HEREBY CERTIFY THAT THE AS-BUILT INFORMATION SHOWN HEREON SATISFIES THE INTENT OF THE DESIGN.

REGISTERED LAND SURVEYOR | REGISTRATION NO. | DATE
FIRM NAME:

| REV. NO. | DATE | DRWN | CHKD | REMARKS |
|---|---|---|---|---|
| | | | | |


Dibble Engineering
7500 N. Dreamy Draw Drive
Suite 200
Phoenix, AZ 85020
P 602.957.1155
F 602.957.2838
www.dibblecorp.com


C.O.C. LOG NO. EON14-0008

LARGE VALVE REPLACEMENT PROJECT NO. WA1504.401

# STANDARD ABBREVIATIONS & LEGEND

| | |
|---|---|
| AASHTO | AMERICAN ASSOCIATION OF STATE HIGHWAY AND TRANSPORTATION OFFICIALS |
| ABAND | ABANDONED |
| ABC | AGGREGATE BASE COURSE |
| AC | ACRES |
| AC | ASPHALT CONCRETE |
| ACFC | ASPHALT CONCRETE FRICTION COURSE |
| ACI | AMERICAN CONCRETE INSTITUTE |
| ACP | ASBESTOS CEMENT PIPE |
| ACSC | ASPHALT CONCRETE SURFACE COURSE |
| ADA | AMERICANS WITH DISABILITIES ACT |
| ADOT | ARIZONA DEPARTMENT OF TRANSPORTATION |
| AHD | AHEAD |
| AISC | AMERICAN INSTITUTE OF STEEL CONSTRUCTION |
| APS | ARIZONA PUBLIC SERVICE |
| ASLD | ARIZONA STATE LAND DEPARTMENT |
| ASTM | AMERICAN SOCIETY FOR TESTING MATERIALS |
| AVE | AVENUE |
| AVV | AIR/VACUUM VALVE |
| B/C | BACK OF CURB |
| BC | BRASS CAP |
| BCF | BRASS CAP FLUSH |
| BCHH | BRASS CAP IN HANDHOLE |
| BCR | BEGIN CURB RETURN |
| BK | BACK |
| BKFL | BACKFILL |
| BLDG | BUILDING |
| BLVD | BOULEVARD |
| BM | BENCHMARK |
| BOT | BOTTOM |
| C | CONCRETE ELEVATION |
| C | CONDUIT |
| C&G | CURB AND GUTTER |
| CAP | CORRUGATED ALUMINUM PIPE |
| CATV | CABLE TELEVISION |
| CB | CATCH BASIN |
| CIP | CAST IRON PIPE |
| CIP | CAST IN PLACE |
| CIPP | CURED IN PLACE PIPE |
| CK | CHECKED |
| ℄ | CENTERLINE |
| CLR | CLEAR |
| CMP | CORRUGATED METAL PIPE |
| CO | CLEAN OUT |
| COMM | COMMUNICATION |
| CONC | CONCRETE |
| CONST | CONSTRUCTION |
| COR | CORNER |
| CORR | CORRECTION |
| CSP | CORRUGATED STEEL PIPE |
| CTB | CEMENT TREATED BASE |
| D/W | DRIVEWAY |
| DB | DUCT BANK |
| DES | DESIGN |
| DET | DETAIL |
| DG | DECOMPOSED GRANITE |
| DIP | DUCTILE IRON PIPE |
| DR | DRIVE |
| DRN | DRAWN |
| DRNG | DRAINAGE |
| DS | DEWATERING STANDPIPE |
| DWG | DRAWING |
| E | EAST, EASTING |
| E/P | EDGE OF PAVEMENT |
| EA | EACH |
| EB | ELECTRIC PULLBOX |
| ECR | END CURB RETURN |
| EGL | ENERGY GRADE LINE |
| EL | ELEVATION |
| ELEC | ELECTRIC |
| ESMT | EASEMENT |
| EVAC | EAST VALLEY ASPHALT COMMITTEE |
| EXST | EXISTING |
| F | FAX NUMBER |
| F/C | FACE OF CURB |
| FCDMC | FLOOD CONTROL DISTRICT OF MARICOPA COUNTY |
| FF | FINISH FLOOR ELEVATION |
| FG | FINISH GRADE ELEVATION |
| FH | FIRE HYDRANT |
| FHWA | FEDERAL HIGHWAY ADMINISTRATION |
| FL | FIRE LINE |
| FL | FLOWLINE |
| FL | FLANGE |
| FND | FOUND |
| FO | FIBER OPTIC |
| FT | FOOT OR FEET |
| G | GUTTER ELEVATION |
| G | GAS |
| GAF | GRID ADJUSTMENT FACTOR |
| GB | GRADE BREAK |
| GM | GAS METER |
| GND | GROUND |
| GV | GAS VALVE |
| H | HORIZONTAL |
| HDPE | HIGH DENSITY POLYETHYLENE |
| HDWL | HEADWALL |
| HGL | HYDRAULIC GRADE LINE |
| HP | HIGH PRESSURE |
| HW | HIGH WATER |
| HWY | HIGHWAY |
| ID | INSIDE DIAMETER |
| INV | INVERT |
| IRR | IRRIGATION |
| IV | IRRIGATION VALVE |
| L | LENGTH OF CURVE |
| LF | LINEAR FEET |
| LS | LUMP SUM |
| LT | LEFT |
| MAG | MARICOPA ASSOCIATION OF GOVERNMENTS |
| MAX | MAXIMUM |
| MB | MAILBOX |
| MCDOT | MARICOPA COUNTY DEPARTMENT OF TRANSPORTATION |
| MCESD | MARICOPA COUNTY ENVIRONMENTAL SERVICES DEPARTMENT |
| ME | MATCH EXISTING |
| MH | MANHOLE |
| MI | MILES |
| MIN | MINIMUM |
| MJ | MECHANICAL JOINT |
| ℳ | MONUMENT LINE |
| MOD | MODIFIED |
| N | NORTH, NORTHING |
| NC | NORMAL CROWN |
| NE | NORTHEAST |
| NO | NUMBER |
| NPDES | NATIONAL POLLUTANT DISCHARGE ELIMINATION SYSTEM |
| NPI | NON-PAY ITEM |
| NSF | NATIONAL SANITATION FOUNDATION |
| NTS | NOT TO SCALE |
| NW | NORTHWEST |
| OC | ON CENTER |
| OD | OUTSIDE DIAMETER |
| OHE | OVERHEAD ELECTRIC |
| OHT | OVERHEAD TELEPHONE |
| P | PAVEMENT ELEVATION |
| P | PHONE NUMBER |
| PB | PULLBOX |
| PC | POINT OF CURVATURE |
| PCC | POINT OF COMPOUND CURVATURE |
| PCCP | PORTLAND CEMENT CONCRETE PAVEMENT |
| PE | POLYETHYLENE PIPE |
| PED | TELEPHONE PEDESTAL |
| PGL | PROFILE GRADE LINE |
| PH# | POTHOLE NUMBER |
| PI | POINT OF INTERSECTION |
| PIP | PROTECT IN PLACE |
| ℙ | PROPERTY LINE |
| PLSS | PUBLIC LAND SURVEY SYSTEM |
| POC | POINT ON CURVE |
| POT | POINT ON TANGENT |
| PP | POWER POLE |
| PRC | POINT OF REVERSE CURVATURE |
| PROP | PROPOSED |
| PSI | POUNDS PER SQUARE INCH |
| PT | POINT OF TANGENCY |
| PT | POINT |
| PUE | PUBLIC UTILITY EASEMENT |
| PVC | POLY VINYL CHLORIDE |
| PVI | POINT OF VERTICAL INTERSECTION |
| PVMT | PAVEMENT |
| PVRC | POINT OF VERTICAL REVERSE CURVATURE |
| PVT | POINT OF VERTICAL TANGENCY |
| R | RADIUS |
| R | RANGE |
| R/W | RIGHT-OF-WAY |
| RCBC | REINFORCED CONCRETE BOX CULVERT |
| RCP | REINFORCED CONCRETE PIPE |
| RD | ROAD |
| RDWY | ROADWAY |
| RELOC | RELOCATE |
| RGRCP | RUBBER GASKET REINFORCED CONCRETE PIPE |
| RR | RAILROAD |
| RT | RIGHT |
| RW | RECLAIMED WATER |
| S | SLOPE |
| S | SOUTH |
| S/W | SIDEWALK |
| SD | STORM DRAIN |
| SE | SOUTHEAST |
| SEC | SECTION |
| SF | SQUARE FOOT |
| SG | SUBGRADE ELEVATION |
| SHLDR | SHOULDER |
| SHT | SHEET |
| SPEC | SPECIFICATIONS |
| SRP | SALT RIVER PROJECT |
| SS | SANITARY SEWER |
| SSD | STOPPING SIGHT DISTANCE |
| ST | STREET |
| STA | STATION |
| STD | STANDARD |
| STL | STEEL |
| SW | SOUTHWEST |
| SWG | SOUTHWEST GAS COMPANY |
| SY | SQUARE YARD |
| T | TOWNSHIP |
| T | TANGENT LENGTH |
| T/W | TOP OF WALL |
| TBM | TEMPORARY BENCHMARK |
| TC | TOP OF CURB |
| TCE | TEMPORARY CONSTRUCTION EASEMENT |
| TEL | TELEPHONE |
| TEMP | TEMPORARY |
| TN | TOP OF NUT |
| TOE | TOE OF EMBANKMENT |
| TOP | TOP |
| TRAN | TRANSITE PIPE |
| TS | TRAFFIC SIGNAL |
| TYP | TYPICAL |
| UNK | UNKNOWN |
| UPRR | UNION PACIFIC RAILROAD |
| V | VERTICAL |
| VC | VERTICAL CURVE |
| VCP | VITRIFIED CLAY PIPE |
| VG | VALLEY GUTTER |
| VNAE | VEHICULAR NON ACCESS EASEMENT |
| W | WEST |
| W | WATER |
| W/ | WITH |
| W/O | WITHOUT |
| WM | WATER METER |
| WSE | WATER SURFACE ELEVATION |
| WV | WATER VALVE |
| XFMR | TRANSFORMER |

## EXISTING

- BENCHMARK
- BRASS CAP FLUSH
- BRASS CAP IN HANDHOLE
- BACKFLOW PREVENTER
- CACTUS
- DRYWELL
- FIRE HYDRANT
- FIRE DEPT CONNECTION
- FLAG POLE
- GATE
- GRATE
- GUY WIRE
- HEADWALL
- MAILBOX
- MANHOLE (TYPE NOTED)
- METER (TYPE NOTED)
- PEDESTAL (TYPE NOTED)
- PULLBOX (TYPE NOTED)
- RIPRAP
- ROCK
- SHRUB
- SIGN
- STREET LIGHT
- TREE
- UTILITY POLE
- VALVE (TYPE NOTED)
- BUILDING SETBACK
- DISTRICT BOUNDARY OR CITY LIMITS
- EASEMENT
- FOREST BOUNDARY LINE
- MID-SECTION
- PROPERTY LINE
- RIGHT-OF-WAY
- SECTION
- CHANNEL
- CURB & GUTTER
- EDGE OF PAVEMENT
- FENCE WOOD
- FENCE WIRE
- FENCE CHAINLINK
- FLOWLINE
- GUARDRAIL
- MASONRY WALL/RETAINING WALL
- MAJOR CONTOUR
- MINOR CONTOUR
- RAILROAD
- SINGLE CURB
- SIDEWALK

## EXISTING

- CABLE TV
- COMMUNICATION
- ELECTRIC (UNDERGROUND)
- ELECTRIC (OVERHEAD)
- FIBER OPTIC
- FIRE LINE
- GAS
- IRRIGATION LINE 18" OR SMALLER
- IRRIGATION LINE 21" OR LARGER
- RECLAIMED WATER 18" OR SMALLER
- RECLAIMED WATER 21" OR LARGER
- TELEPHONE
- SEWER LINE 18" OR SMALLER
- SEWER LINE 21" OR LARGER
- STORM DRAIN 18" OR SMALLER
- STORM DRAIN 21" OR LARGER
- WATER LINE 18" OR SMALLER
- WATER LINE 21" OR LARGER

## NEW

- BENCHMARK
- BRASS CAP FLUSH
- BRASS CAP IN HANDHOLE
- BACKFLOW PREVENTER
- BORING LOCATION
- CACTUS
- DRYWELL
- FIRE HYDRANT
- FIRE DEPT CONNECTION
- FLAG POLE
- GATE
- HEADWALL
- MAILBOX
- MANHOLE
- METER
- PIPE PLUG
- POTHOLE LOCATION
- PULLBOX
- RIPRAP
- ROCK
- SHRUB
- SIGN
- STREET LIGHT
- TREE
- UTILITY POLE
- VALVE
- BUILDING SETBACK
- CENTERLINE
- EASEMENT
- LIMITS OF CONSTRUCTION
- RIGHT-OF-WAY
- BASE FLOOD ELEVATION
- CHANNEL
- CURB & GUTTER
- DAYLIGHT LINE, CUT
- DAYLIGHT LINE, FILL
- EDGE OF PAVEMENT
- FENCE WOOD
- FENCE WIRE
- FENCE CHAINLINK
- FLOWLINE
- GUARDRAIL
- MASONRY WALL/RETAINING WALL
- MAJOR CONTOUR
- MINOR CONTOUR
- SIDEWALK
- SINGLE CURB

## NEW

- STORM DRAIN
- UTILITY LINE

Call at least two full working days before you begin excavation
ARIZONA811
Arizona Blue Stake, Inc.
Dial 811 or 1-800-STAKE IT (800-782-5348)
In Maricopa County: (602) 263-1100

| REV. NO. | DATE | DRWN | CHKD | REMARKS |
|---|---|---|---|---|

DESIGNED BY: KJN
DRAWN BY: RAK
SHEET CHK'D BY: RAK
CROSS CHK'D BY: KJN
APPROVED BY: JRF
DATE: 6/5/15

PRELIMINARY SUBMITTAL
60%
NOT FOR CONSTRUCTION OR RECORDING

Dibble Engineering

CITY OF CHANDLER, ARIZONA
MUNICIPAL UTILITIES DEPARTMENT
LARGE VALVE REHABILITATION/
REPLACEMENT PROGRAM

LEGEND & ABBREVIATIONS

PROJECT NO. PROJECT NO.
FILE NAME: 1471_02-LGND.DWG
SHEET NO.
G1
SHEET 2 OF 12

## CITY OF CHANDLER GENERAL NOTES (REVISED 6/25/14):

1. ALL CONSTRUCTION SHALL BE IN ACCORDANCE WITH THE MOST CURRENT ADOPTED MAG SPECIFICATIONS AND STANDARD DETAILS AS SUPPLEMENTED BY THE CITY OF CHANDLER.
2. THE CONTRACTOR SHALL OBTAIN ALL NECESSARY PERMITS PRIOR TO CONSTRUCTION.
3. THE CITY ENGINEER'S OFFICE SHALL BE NOTIFIED 24 HOURS PRIOR TO STARTING EACH PHASE OF CONSTRUCTION (480-782-3320).
4. PROJECT ELEVATIONS ARE BASED UPON NAVD 88 DATUM. THE FOLLOWING BENCHMARK WAS UTILIZED:

| BENCHMARK NUMBER | NGVD 29 ELEVATION | DESCRIPTION | EQUATION | NAVD 88 ELEVATION |
|---|---|---|---|---|
| 35B | 1232.64 | 3" CITY OF CHANDLER BRASS CAP IN CONCRETE, FLUSH, AT THE INTERSECTION OF CANYON OAKS WAY AND DERRINGER WAY | =NGVD22 +1.709 | 1234.35 |

5. PRIOR TO ANY CONSTRUCTION IN THE PUBLIC RIGHT-OF-WAY, THE CONTRACTOR/DEVELOPER SHALL NOTIFY THE LANDSCAPE COMPLIANCE COORDINATOR AT 480-782-3428. ANY CONSTRUCTION WITHIN THE PUBLIC RIGHT-OF-WAY SHALL BE RESTORED TO ORIGINAL CONDITIONS USING THE FOLLOWING REQUIREMENTS:
   - A. ALL TREES IMPACTED BY CONSTRUCTION SHALL BE REPLACED WITH THE SAME SIZE AND TYPE OF TREE AT A LOCATION DETERMINED BY THE CITY;
   - B. ALL IRRIGATION SYSTEMS SHALL BE RESTORED TO FULLY FUNCTIONING STATUS. ANY IRRIGATION LOCATED BENEATH ASPHALT OR CONCRETE SHALL BE SLEEVED WITH SCHEDULE 40 PVC TWO NOMINAL SIZES LARGER;
   - C. THE AREA OF CONSTRUCTION SHALL BE TREATED WITH PRE-EMERGENT HERBICIDE (I.E. SURFLAN);
   - D. GRANITE OF A SIZE AND COLOR TO MATCH EXISTING SHALL BE SPREAD A MINIMUM OF TWO INCHES THICK;
   - E. THE STREET DIVISION SHALL BE CONTACTED TO INSPECT ALL WORK BEFORE A CONDITIONAL ACCEPTANCE IS ISSUED;
   - F. THE CONTRACTOR/DEVELOPER SHALL MAINTAIN THE AREA FOR NINETY DAYS AFTER CONDITIONAL ACCEPTANCE. AFTER 90 DAYS THE CITY SHALL BE CONTACTED FOR FINAL ACCEPTANCE AND ASSUMPTION OF MAINTENANCE.
6. ANY WORK PERFORMED WITHOUT THE APPROVAL OF THE CITY ENGINEER AND/OR ALL WORK AND MATERIAL NOT IN CONFORMANCE WITH THE SPECIFICATIONS IS SUBJECT TO REMOVAL AND REPLACEMENT AT THE CONTRACTOR'S EXPENSE.
7. THE CONTRACTOR SHALL UNCOVER ALL EXISTING LINES BEING TIED INTO TO VERIFY THEIR LOCATION. THE CONTRACTOR SHALL LOCATE OR HAVE LOCATED ALL EXISTING UNDERGROUND UTILITIES (ELECTRIC, TELEPHONE, PIPELINES, ETC.) AND STRUCTURES IN ADVANCE OF CONSTRUCTION AND SHALL ELIMINATE ALL CONFLICTS PRIOR TO START OF CONSTRUCTION. BLUE STAKE TELEPHONE (602) 263-1100.
8. THE CITY OF CHANDLER IS NOT RESPONSIBLE FOR LIABILITY INCURRED DUE TO DELAYS AND/OR DAMAGES TO UTILITIES IN CONJUNCTION WITH THIS CONSTRUCTION. THE CITY WILL NOT PARTICIPATE IN THE COST OF CONSTRUCTION OR UTILITY RELOCATION.
9. NO FINAL ACCEPTANCE SHALL BE ISSUED UNTIL 4 MIL PHOTO MYLAR REPRODUCIBLE "AS-BUILT" PLANS CERTIFIED AND SEALED BY A REGISTERED CIVIL ENGINEER, HAVE BEEN SUBMITTED AND ACCEPTED BY THE CITY ENGINEER.
10. APPLICATIONS FOR STREET CUT PERMITS MUST BE APPROVED BY THE CITY ENGINEER PRIOR TO APPROVAL OF IMPROVEMENT PLANS. ALL PAVEMENT REPLACEMENT SHALL BE IN ACCORDANCE WITH SECTION 336 AND AS MODIFIED BY CITY SUPPLEMENTS.
11. BACKFILLING SHALL NOT BE STARTED UNTIL LINES ARE APPROVED BY THE CITY ENGINEER. ALL BACKFILL SHALL BE HALF-SACK CLSM UNLESS OTHERWISE APPROVED ON THE PLANS. ABC OR NATIVE MATERIAL SHALL BE INSTALLED IN ACCORDANCE WITH MAG SECTION 601, TYPE I. BACKFILL PLACEMENT AND SURFACE REPLACEMENT SHALL BE IN ACCORDANCE WITH MAG STD DTL 200 T-TOP WITH 16" MIN DEPTH ABC SHELF.
12. CONSTRUCTION OF CONCRETE OR PAVING ITEMS SHALL NOT COMMENCE UNTIL ALL UNDERGROUND WORK HAS BEEN INSPECTED AND TESTED.
13. DISPOSAL OF AND STOCKPILING OF EXCESS MATERIAL WITHIN THE CHANDLER CITY LIMITS OR PLANNING AREA SHALL BE DONE IN SUCH A WAY THAT WILL NOT CREATE A NUISANCE. THE PLACING OF MATERIAL ON PRIVATE PROPERTY OF ANOTHER REQUIRES WRITTEN AUTHORIZATION. EARTHWORK STOCKPILES ARE NOT TO EXCEED 6 FEET IN HEIGHT. SLOPES ON ALL SIDES OF THE STOCKPILE SHALL NOT EXCEED A 1 TO 2 RATIO OF HEIGHT TO LENGTH. ANY EARTHWORK STOCKPILE, EVEN LESS THAN 6 FEET, MUST BE REMOVED WITHIN 7 DAYS OF CITY NOTIFICATION IF DUST SUPPRESSION EFFORTS FAIL TO MAINTAIN SATISFACTORY AIRBORNE CONTAMINANT CONTROL.
14. TRAFFIC CONTROL SHALL BE MAINTAINED IN ACCORDANCE WITH THE CHANDLER TRAFFIC BARRICADE MANUAL.
15. THE CONTRACTOR SHALL PROVIDE ADEQUATE MEANS FOR CLEANING TRUCKS AND/OR OTHER EQUIPMENT OF MUD PRIOR TO ENTERING PUBLIC STREETS, AND IT IS THE CONTRACTOR'S RESPONSIBILITY TO CLEAN STREETS, ALLAY DUST, AND TAKE WHATEVER MEASURES ARE NECESSARY TO INSURE THAT ALL ROADS ARE MAINTAINED IN A CLEAN, MUD AND DUST-FREE CONDITION AT ALL TIMES THE CONTRACTOR SHALL UTILIZE A PM10-CERTIFIED STREET SWEEPER FOR STREET CLEANING.
16. AN APPROVED SET OF PLANS SHALL BE MAINTAINED ON THE JOB SITE AT ALL TIMES THAT WORK IS IN PROGRESS. DEVIATION FROM THE PLANS SHALL NOT BE ALLOWED WITHOUT AN APPROVED PLAN REVISION.
17. A MINIMUM HORIZONTAL SEPARATION OF SIX (6) FEET IS REQUIRED BETWEEN SEWER SERVICES AND WATER OR FIRELINE SERVICES. A MINIMUM HORIZONTAL SEPARATION OF SIX (6) FEET IS REQUIRED BETWEEN RECLAIMED WATER SERVICES AND SEWER, WATER, OR FIRELINE SERVICES.
18. SETBACKS FOR UTILITY POLES, STRUCTURES, AND OTHER SIMILAR FACILITIES (NOT INCLUDING LANDSCAPING) GREATER THAN 6 INCHES IN HEIGHT SHALL BE 5 FEET FROM THE BACK OF CURB UNLESS APPROVED IN WRITING BY THE CITY ENGINEER. IN CASES WHERE THE FACILITIES ARE ADJACENT TO A DECELERATION LANE, BUS BAY, OR MEDIAN CURB, THE SETBACK CAN BE REDUCED TO 2 FEET FROM THE BACK OF CURB.
19. ANY PROPOSED RETAINING WALLS, OR COMBINATION RETAINING/SCREEN WALLS, SHALL BE CONSTRUCTED, AND THE RETAINING WALL AS-BUILT CERTIFICATION SIGNED BY THE REGISTERED CIVIL/STRUCTURAL ENGINEER, BEFORE ANY IMPROVEMENTS ARE ACCEPTED, OR CONDITIONALLY ACCEPTED, BY THE CITY ENGINEER.

## CITY OF CHANDLER GENERAL NOTES:

20. ALL UNDERGROUND FACILITIES INSTALLED IN ANY REAL PROPERTY OUTSIDE THE CITY'S RIGHT-OF-WAY SHALL COMPLY WITH THE FOLLOWING MARKING STANDARDS IN ACCORDANCE WITH HOUSE BILL 2256. A YELLOW INSULATED COPPER WIRE OR OTHER APPROVED CONDUCTOR SHALL BE INSTALLED ADJACENT TO UNDERGROUND UTILITIES FOR FIRE LINE PIPING, POTABLE WATER DISTRIBUTION PIPING, SANITARY SEWER LINES, STORMWATER PIPING, RECLAIMED WATER PIPING, GRAVITY FLOW IRRIGATION PIPING AND PRESSURIZED IRRIGATION PIPING LARGER THAN TWO (2) INCHES IN DIAMETER UNLESS THESE FACILITIES CAN BE DETECTED FROM ABOVE GROUND WITH AN ELECTRONIC LOCATING DEVICE. ACCESS SHALL BE PROVIDED TO THE TRACER WIRE OR THE TRACER WIRE SHALL TERMINATE ABOVE GROUND AT EACH END OF THE PIPING. THE TRACER WIRE SHALL NOT BE LESS THAN 18 AWG AND THE INSULATION TYPE SHALL BE SUITABLE FOR DIRECT BURIAL.
21. ANY CONSTRUCTION DETOURS WILL REQUIRE AN ALL-WEATHER SURFACE PER MARICOPA COUNTY AIR QUALITY REQUIREMENTS.
22. THE FOLLOWING UTILITY COMPANIES HAVE BEEN IDENTIFIED BY BLUE STAKE COORDINATION AND PROJECT PLANS HAVE BEEN SUBMITTED MOST RECENTLY AS NOTED.

UTILITIES WITHIN OR AFFECTED BY THE PROJECT

| UTILITY CONTACT | DATE SUBMITTED |
|---|---|
| | 6/5/2015 |
| ARIZONA PUBLIC SERVICE | 6/5/2015 |
| AT&T TELEPHONE LONG DISTANCE | 6/5/2015 |
| CENTURYLINK | 6/5/2015 |
| COX CABLE | 6/5/2015 |
| KINDER MORGAN ENERGY PARTNERS | 6/5/2015 |
| SALT RIVER PROJECT (POWER) | 6/5/2015 |
| SOUTHWEST GAS | 6/5/2015 |
| SPRINT TELEPHONE LONG DISTANCE | 6/5/2015 |

## ENGINEER'S GENERAL NOTES:

1. PRIOR TO THE START OF ANY WORK ACTIVITIES, THE CONTRACTOR SHALL PROVIDE NOTIFICATION TO THE OWNER AND THE ENGINEER. A PRE-ACTIVITY MEETING (PRECONSTRUCTION CONFERENCE) IS REQUIRED.
2. EXISTING UTILITIES AND OTHER FACILITIES HAVE BEEN SHOWN ON THE CONTRACT DRAWINGS BASED ON CITY PROVIDED GIS DATA, EXISTING MAPS AND OTHER INFORMATION GATHERED BY THE ENGINEER DURING DESIGN. THE CONTRACTOR SHALL BE RESPONSIBLE FOR VERIFYING THE EXACT LOCATIONS OF ALL UTILITIES IMPACTING CONSTRUCTION AND PROTECTION OF SAID UTILITIES. IF RELOCATION OF UTILITIES IS REQUIRED, THE CONTRACTOR SHALL COORDINATE THE RELOCATION WITH THE OWNER. UTILITIES DAMAGED BY CONTRACTOR'S ACTIVITIES SHALL BE REPAIRED WITH NEW MATERIALS AT NO COST TO THE OWNER AND TO THE OWNER'S SATISFACTION.
3. CONTRACTOR SHALL SUPPORT AND PROTECT IN-PLACE UTILITIES WITHIN THE EXCAVATION IN ACCORDANCE WITH MAG SPECIFICATIONS, UNLESS OTHERWISE APPROVED IN WRITING BY THE OWNER OF THE UTILITY.
4. EXISTING FEATURES AND FACILITIES WHICH ARE NOT SPECIFICALLY LOCATED WITH HORIZONTAL AND VERTICAL CONTROLS ARE LOCATED APPROXIMATELY WITH THE BEST AVAILABLE INFORMATION. VARIATIONS BETWEEN PLAN LOCATION AND ACTUAL DIMENSIONS WILL NOT BE A BASIS FOR A MODIFICATION OF THE CONTRACT AMOUNT.
5. THE OWNER HAS OBTAINED PERMIT APPROVAL FROM DESIGNATED AGENCIES. THE CONTRACTOR SHALL BE RESPONSIBLE FOR OBTAINING PERMITS, PAYING PERMIT FEES, COORDINATING DESIGNATED AGENCY INSPECTIONS AND CLOSURE OF PERMITS. ALL WORK SHALL BE PERFORMED IN ACCORDANCE WITH THE PROVISIONS OF THE DESIGNATED PERMITS AND THE REGULATIONS OF THE PERMITTING AGENCIES.
6. CONTRACTOR'S WORK ACTIVITIES SHALL BE SCHEDULED AND PHASED SO AS NOT TO UNDULY IMPEDE OR PREVENT ACCESS TO PRIVATE RESIDENCES, PUBLIC FACILITIES, SCHOOLS, OR BUSINESS EXCEPT BY PRIOR WRITTEN AGREEMENT WITH THE IMPACTED OWNER(S) OR OPERATORS.
7. ALL EQUIPMENT, MATERIALS, VEHICLES AND CONSTRUCTION ACTIVITIES SHALL REMAIN WITHIN PUBLIC RIGHTS-OF-WAY OR DESIGNATED EASEMENTS.
8. ANY EXISTING FEATURES OR FACILITIES DISTURBED BY THE CONTRACTOR SHALL BE REPLACED IN KIND WITH NEW MATERIALS MEETING THE OWNER'S APPROVAL AT NO ADDITIONAL COST TO THE OWNER.
9. CONSTRUCTION STAKING SHALL BE THE RESPONSIBILITY OF THE CONTRACTOR.
10. THE CONTRACTOR SHALL PROVIDE CLEAR AND ACCURATE REDLINES TO THE OWNER FOR PREPARATION OF RECORD DRAWINGS. THE REDLINES SHALL BE UPDATED ON A DAILY BASIS TO REFLECT THE CURRENT CONSTRUCTION ACTIVITIES AT ALL TIMES AND MAY BE INSPECTED BY THE OWNER/ENGINEER AT ANY TIME UPON REQUEST.
11. THE CONTRACTOR SHALL BE SOLELY RESPONSIBLE FOR SAFETY ON THE CONSTRUCTION SITE. THE CONTRACTOR SHALL IMPLEMENT AN APPROVED SAFETY PLAN, AND ALL PERSONNEL ON THE JOB SHALL FOLLOW THE APPROVED SAFETY PLAN.
12. THE CONTRACTOR SHALL PROVIDE SUITABLE PROTECTION FOR EXCAVATIONS. AT A MINIMUM, OSHA REGULATIONS REQUIRE PROTECTION FROM CAVE-INS FOR EXCAVATIONS GREATER THAN FIVE FEET IN DEPTH. WHERE EXCAVATIONS ARE DEEPER THAN TWENTY FEET, EXCAVATION PLANS AND SHORING SYSTEM DESIGN SHALL BE SIGNED BY A PROFESSIONAL ENGINEER REGISTERED IN THE STATE OF ARIZONA.
13. TRENCH EXCAVATION, BACKFILL, AND SURFACE REPLACEMENT SHALL BE AS SHOWN ON THE DRAWINGS AND/OR REQUIRED BY THE CONTRACT DOCUMENTS. IN NO CASE SHALL TRENCH EXCAVATION, BACKFILL AND SURFACE REPLACEMENT BE LESS STRINGENT THAN MAG REQUIREMENTS, EXCEPT AS MAY BE SPECIFICALLY ALLOWED IN WRITING BY THE ENGINEER. UNLESS OTHERWISE DESIGNATED, ALL COMPACTION DENSITIES SHALL MEET THE REQUIREMENTS OF MAG SPECIFICATION SECTION 601, TYPE I.
14. CONTRACTOR SHALL USE EXTREME CAUTION WHILE WORKING IN THE VICINITY OF ALL GAS AND POWER LINES. THE CONTRACTOR SHALL MAINTAIN THE INTEGRITY OF THE GAS AND POWER TRENCHES AND PIPELINES AT ALL TIMES. SPECIAL ATTENTION SHALL BE GIVEN TO BRACING AND SUPPORT FOR UNDERGROUND POWER CROSSINGS. POLE BRACING MAY BE REQUIRED BY THE POWER COMPANY WHEN EXCAVATING NEAR POWER POLES.

## CITY OF CHANDLER LANDSCAPE NOTES:

1. PRIOR TO ANY CONSTRUCTION OR UTILITY WORK STARTING WITHIN A CITY RIGHT-OF-WAY, WHICH WILL AFFECT EXISTING CITY-OWNED AND MAINTAINED LANDSCAPING OR IRRIGATION SYSTEMS, THERE WILL BE A MEETING ON SITE TO SHOW THAT THE EXISTING SYSTEMS OR LANDSCAPED AREAS ARE IN PROPER REPAIR AND FUNCTIONING. AT THE COMPLETION OF THE CONSTRUCTION WORK THERE WILL BE ANOTHER MEETING AND INSPECTION ON SITE. THE SAME AREAS AND SYSTEMS WILL AGAIN BE REVIEWED.
2. ANY DAMAGE TO THE LANDSCAPING OR TO THE IRRIGATION SYSTEM WILL BE THE RESPONSIBILITY OF THE GENERAL CONTRACTOR OR UTILITY COMPANY AND MUST BE REPAIRED TO THE SATISFACTION OF THE CITY WITHIN FIVE (5) WORKING DAYS. IF THIS WORK IS NOT COMPLETED WITHIN THE ALLOTTED TIME, THE CITY WILL MAKE THE REPAIRS OR CORRECTIONS AND MONEY WILL BE DEDUCTED OR BILLED TO THE GENERAL CONTRACTOR ON THE PROJECT. THE INDIVIDUALS WHICH SHOULD BE REPRESENTED AT THESE ON-SITE MEETINGS SHALL BE: A REPRESENTATIVE FROM THE CONTRACTOR, A REPRESENTATIVE FROM THE ENGINEERING FIRM OR CITY RESPONSIBLE FOR THE CONSTRUCTION INSPECTION AND A REPRESENTATIVE FROM THE CITY STREET DEPARTMENT.
3. PRIOR TO ANY LANDSCAPE OR IRRIGATION CONSTRUCTION IN THE PUBLIC RIGHT-OF-WAY, THE CONTRACTOR/DEVELOPER SHALL NOTIFY THE CITY LANDSCAPE COMPLIANCE COORDINATOR AT 480-782-3428 AT LEAST 48 HOURS IN ADVANCE OF INSTALLATION WORK.
4. CONTRACTOR MUST SUBMIT A DECOMPOSED GRANITE SAMPLE TO CITY LANDSCAPE COMPLIANCE COORDINATOR PRIOR TO ORDERING.

## CITY OF CHANDLER WATER NOTES (REVISED 9/29/14):

1. WATERLINES SHALL BE INSTALLED PER C-308 AND THE CITY SUPPLEMENT TO SECTION 610.
2. FIRE HYDRANTS SHALL BE FURNISHED BY THE CONTRACTOR AND INSTALLED IN ACCORDANCE WITH C-303. ALL FIRE HYDRANTS SHALL BE PAINTED ACCORDING TO FD121 AFTER INSTALLATION.
3. ALL WATER SERVICE LINE AND METER BOX INSTALLATIONS SHALL CONFORM TO C-301. METER BOXES AND LIDS SHALL BE SUPPLIED BY THE DEVELOPER AND INSTALLED FACING THE LOT.
4. CITY OF CHANDLER WILL FURNISH AND INSTALL ALL WATER METERS WITH PREVAILING COSTS TO BE PAID BY DEVELOPER. THE CITY OF CHANDLER WATER DIVISION SHALL BE NOTIFIED AT (480) 782-3700 24 HOURS PRIOR TO INSTALLATION. (SEE C-316.) THE DEVELOPER SHALL PROVIDE ANY NECESSARY WATER METER ADAPTERS FOR CONNECTION TO THE SERVICE LINES.
5. ALL VALVES 6" - 24" SHALL BE GATE TYPE IN CONFORMANCE WITH MAG SECTION 630.3, UNLESS OTHERWISE NOTED.
6. ALL VALVE BOXES SHALL CONFORM TO C-307.
7. CITY WATER VALVES SHALL BE OPERATED BY CITY PERSONNEL ONLY. CITY REQUIRES A 48 HOUR NOTICE FOR SYSTEM SHUTDOWNS. CONTRACTOR IS REQUIRED TO NOTIFY AFFECTED CUSTOMERS 24 HOURS PRIOR. BUSINESS' MAY REQUIRE AFTER HOURS SHUTDOWNS. RESIDENTIAL FLOWS AFTER SHUTDOWN MAY REQUIRE A PUMP. CONTRACTOR IS RESPONSIBLE TO INSTALL 2" TAPS TO RELIEVE PRESSURE AND ALLEVIATE RESIDUAL FLOWS WHEN NEEDED.
8. RESERVE FOR FUTURE USE.
9. ALL TAPS SHALL USE A BRONZE SERVICE SADDLE. EIGHT (8) INCHES OR LESS SHALL BE SINGLE STRAP AND TEN (10) INCHES OR GREATER SHALL BE DOUBLE STRAP.
10. TAPS IN ACP SHALL BE MADE IN ACCORDANCE WITH THE RECOMMENDATIONS OF THE ACP MANUFACTURERS ASSOCIATION.
11. ALL FIRELINE PIPING, POTABLE WATER DISTRIBUTING PIPING LARGER THAN TWO (2) INCHES IN DIAMETER SHALL HAVE TRACER WIRES INSTALLED PER C-408.
12. ALL PIPE IN THE GROUND SHALL HAVE AWG THWN #14 INSULATED COPPER TRACING WIRE ATTACHED TO THE PIPE AND INTERCONNECTED TO VALVES AT VALVE BOX SPACING INTERVALS. WARNING TAPE IS TO BE USED BURIED A MINIMUM 12" ABOVE THE PIPE. SEE C-408.
13. POLYETHYLENE ENCASEMENT SHALL CONFORM WITH THE APPLICABLE REQUIREMENTS OF AWWA C-600 & AWWA C-105.
14. MECHANICAL OR RESTRAINED JOINT DUCTILE IRON PIPE SHALL BE USED FOR WATER LINE PROTECTION WHEN MAG STD DTL 404 IS SPECIFIED ON THE PLANS.
15. VALVE BOX AND COVER GRADE LOCATED OUTSIDE OF A PAVED AREA SHALL BE SET ONE HALF INCH ABOVE SIDEWALK OR ADJACENT GRADE PER C-317.
16. NO VALVE BOX SHALL BE LOCATED WITHIN SIDEWALK OR SIDEWALK RAMP.
17. ALL 1" SERVICES SHALL BE INSTALLED WITH ANGLE BALL METER VALVE, OF A SIZE DEPENDENT ON WATER METER SIZE. SEE C-301.
18. ALL FIRE HYDRANTS SHALL BE PROVIDED WITH "OUT OF SERVICE" SIGNS AT TIME OF INSTALLATION. THE SIGNS SHALL COMPLY WITH FIRE DEPARTMENT STANDARD DETAIL NO. FD123 AND SHALL REMAIN ON THE FIRE HYDRANTS UNTIL THE WATER LINES ARE TESTED, APPROVED AND PRESSURIZED. THE SIGNS SHALL BE REINSTALLED AT ANY TIME ANY FIRE HYDRANTS ARE TAKEN OUT OF SERVICE, REGARDLESS OF REASON OR THE AMOUNT OF TIME THE FIRE HYDRANTS ARE EXPECTED TO BE OUT OF SERVICE, AND DISPATCH SHALL BE NOTIFIED AT (480) 782-4130. ONLY CITY PERSONNEL SHALL REMOVE A SIGN.

## ENGINEER'S NOTES FOR WATER MAIN CONSTRUCTION:

1. NEW WATER TRANSMISSION MAINS SHALL BE CONSTRUCTED OF MATERIALS IN ACCORDANCE WITH THE SPECIFICATIONS. ACCEPTABLE MATERIALS INCLUDE THE FOLLOWING:

   DUCTILE IRON PIPE (DIP) IN ACCORDANCE WITH MAG STANDARD SPECIFICATION SECTION 750, AMERICAN WATER WORKS ASSOCIATION (AWWA) C-150 AND C-151, CEMENT MORTAR LINING IN ACCORDANCE WITH AWWA C-104. FITTINGS SHALL COMPLY WITH AWWA C-153 (MINIMUM PRESSURE RATING OF 250 PSI FOR FITTINGS). PRESSURE CLASS 350 WILL BE USED FOR ALL DUCTILE IRON PIPE.

   STEEL PIPE PER AWWA C200 AND PROJECT SPECIFICATIONS.

2. VALVES SHALL BE OF THE TYPE DESIGNATED ON THE DRAWINGS AND SHALL COMPLY WITH MAG STANDARD SPECIFICATION SECTION 630 WITH THE EXCEPTION THAT GATE VALVES (14-INCH THROUGH 36-INCH) SHALL BE INSTALLED FOR OPERATION IN THE VERTICAL POSITION. VALVES ARE REQUIRED TO HAVE BLOCKING PER MAG STANDARD DETAIL 301. VALVE BOXES AND COVERS ARE REQUIRED FOR ALL GATE VALVES NOT INSTALLED IN VAULTS. VALVE BOXES SHALL BE ADJUSTED TO FINISH GRADE.

3. JOINT RESTRAINT SHALL BE PROVIDED AT LOCATIONS SHOWN ON THE DRAWINGS AND AT ALL CHANGES IN PIPELINE DIRECTION, TEES, BENDS, DEAD ENDS AND VALVES. RESTRAINED JOINT LENGTHS SHALL BE IN ACCORDANCE WITH MAG STANDARD DETAIL 303 UNLESS OTHERWISE SHOWN ON THE DRAWINGS OR APPROVED BY THE ENGINEER. AT LOCATIONS WHERE PROPER JOINT RESTRAINT OF EXISTING PIPELINES CANNOT BE ACHIEVED, THE CONTRACTOR HAS THE OPTION TO USE THRUST BLOCKS PER MAG STANDARD DETAIL 380 OR REPLACE EXISTING PIPE WITH NEW RESTRAINED JOINT PIPE.

4. THE CONTRACTOR SHALL CONFIRM EXISTING PIPE MATERIAL AT DESIGNATED CONNECTION POINTS PRIOR TO ORDERING FITTINGS.

5. ALL NEW WATER MAINS SHALL BE PRESSURE TESTED PRIOR TO ACCEPTANCE. UNLESS OTHERWISE NOTED IN THE SPECIFICATIONS, PRESSURE TESTING SHALL BE IN ACCORDANCE WITH MAG STANDARD SPECIFICATION SECTION 610.15. UNLESS SPECIFICALLY AUTHORIZED BY THE OWNER, PRESSURE TESTING AGAINST EXISTING SYSTEM COMPONENTS WILL NOT BE ALLOWED.

6. ALL NEW WATER MAINS SHALL BE FLUSHED AND DISINFECTED PRIOR TO CONNECTION TO EXISTING SYSTEMS. OWNER SHALL BE PROVIDED WITH COPIES OF PASSING BACTERIOLOGICAL TEST FROM AN APPROVED LABORATORY PRIOR TO CONNECTING NEW WATER MAINS TO EXISTING SYSTEM. UNLESS OTHERWISE NOTED IN THE SPECIFICATIONS, FLUSHING, DISINFECTION AND BACTERIOLOGICAL TESTING SHALL BE IN ACCORDANCE WITH MAG STANDARD SPECIFICATION SECTION 611.

7. RESTRAINED JOINTS SHALL BE IN ACCORDANCE WITH THE CITY OF CHANDLER WATER SYSTEM DESIGN TECHNICAL DESIGN MANUAL #1, JANUARY 2011.
   CITY OF CHANDLER APPROVED RESTRAINED JOINTS FOR PIPE:
   - A. TR FLEX GRIPPER RING AND TR FLEX JOINT AS MANUFACTURED BY US PIPE.
   - B. AMERICAN FAST GRIP AND FLEX-RING JOINT AS MANUFACTURED BY AMERICAN CAST IRON PIPE COMPANY.
   - C. MEGALUG DUCTILE IRON PIPE RESTRAINTS AS MANUFACTURED BY EBAA IRON, INC.
   - D. SIGMA DIP ONE LOK SLDE SERIES
   - E. TYLER UNION TUF GRIP RESTRAINT

   CITY OF CHANDLER APPROVED RESTRAINED JOINTS FOR FITTINGS:
   - A. SERIES 1100 MEGALUG RESTRAINT PRODUCED BY EBAA IRON, INC.
   - B. SERIES 3000-30000S STARGRIP BY STAR PIPE PRODUCTS.

Call at least two full working days before you begin excavation.
ARIZONA811
Arizona Blue Stake, Inc.
Dial 8-1-1 or 1-800-STAKE-IT (782-5348)
In Maricopa County: (602) 263-1100

| REV. NO. | DATE | DRWN | CHKD | REMARKS |
|---|---|---|---|---|
| | | | | |

DESIGNED BY: KJN
DRAWN BY: RAK
SHEET CHK'D BY: RAK
CROSS CHK'D BY: KJN
APPROVED BY: JRF
DATE: 6/5/15

PRELIMINARY SUBMITTAL
60%
NOT FOR CONSTRUCTION OR RECORDING

Dibble Engineering

CITY OF CHANDLER, ARIZONA
MUNICIPAL UTILITIES DEPARTMENT
LARGE VALVE REHABILITATION/
REPLACEMENT PROGRAM

GENERAL NOTES

PROJECT NO. PROJECT NO.
FILE NAME: 1471_02-NOTE.DWG
SHEET NO.
G2
SHEET 3 OF 12

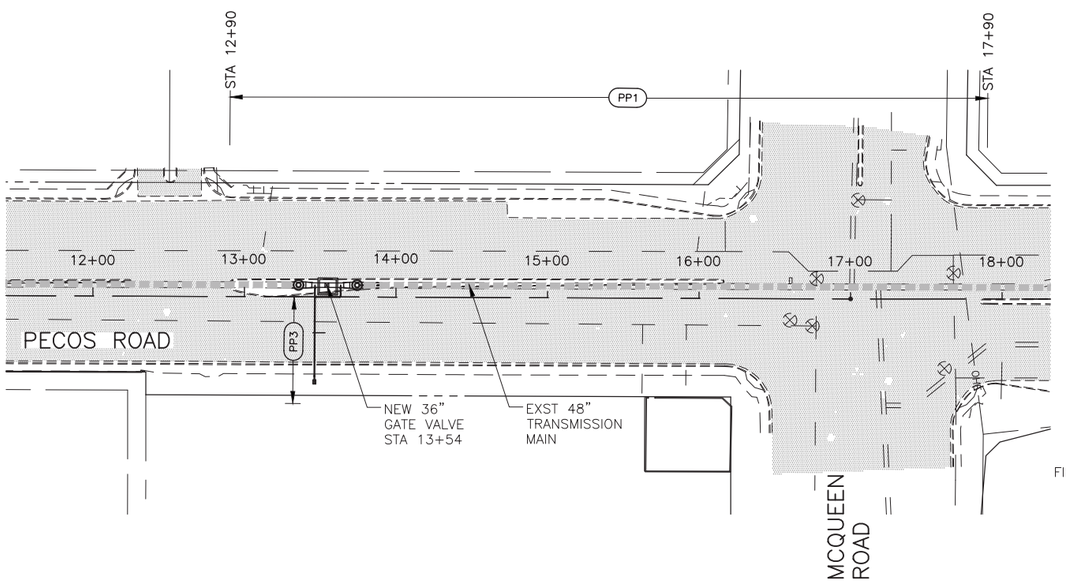


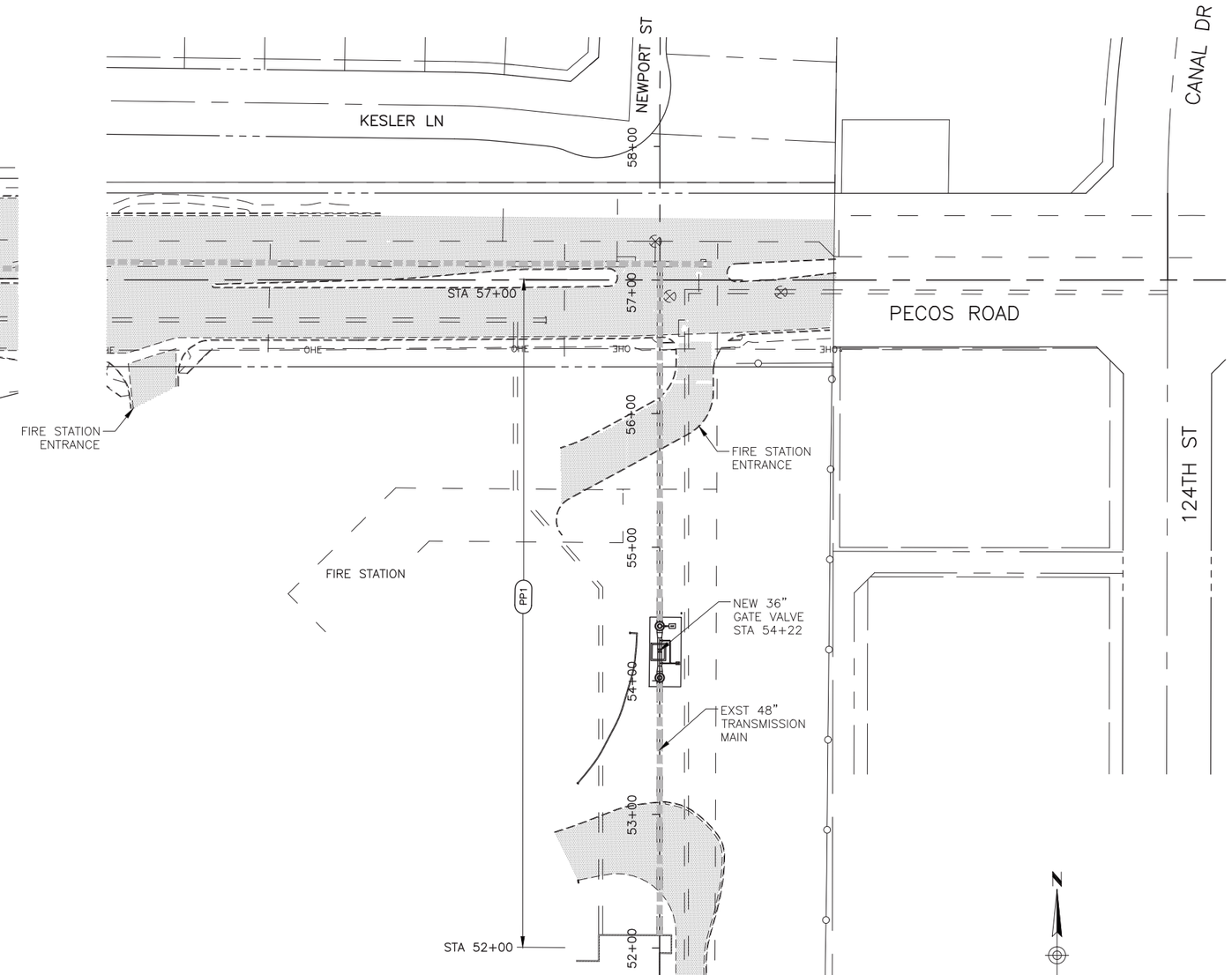


LEGEND

PPX PLAN & PROFILE SHEET

EXST GATE VALVE

NEW GATE VALVE

0' 25' 50' 100'

SCALE: 1"=50'

Call at least two full working days before you begin excavation
Arizona Blue Stake, Inc.
Dial 811 or 1-800-STAKE-IT (782-5348) to notify utilities in Maricopa County (602) 263-1100

| REV. NO. | DATE | DRWN | CHKD | REMARKS |
|---|---|---|---|---|

DESIGNED BY: KJN
DRAWN BY: RAK
SHEET CHK'D BY: RAK
CROSS CHK'D BY: KJN
APPROVED BY: JRF
DATE: 6/5/15

PRELIMINARY SUBMITTAL

60%

NOT FOR CONSTRUCTION OR RECORDING

Dibble Engineering

CITY OF CHANDLER, ARIZONA
MUNICIPAL UTILITIES DEPARTMENT
LARGE VALVE REHABILITATION/
REPLACEMENT PROGRAM

KEY MAP

PROJECT NO. PROJECT NO.

FILE NAME: 1471_02-KMAP.DWG

SHEET NO.

G3

SHEET 4 OF 12

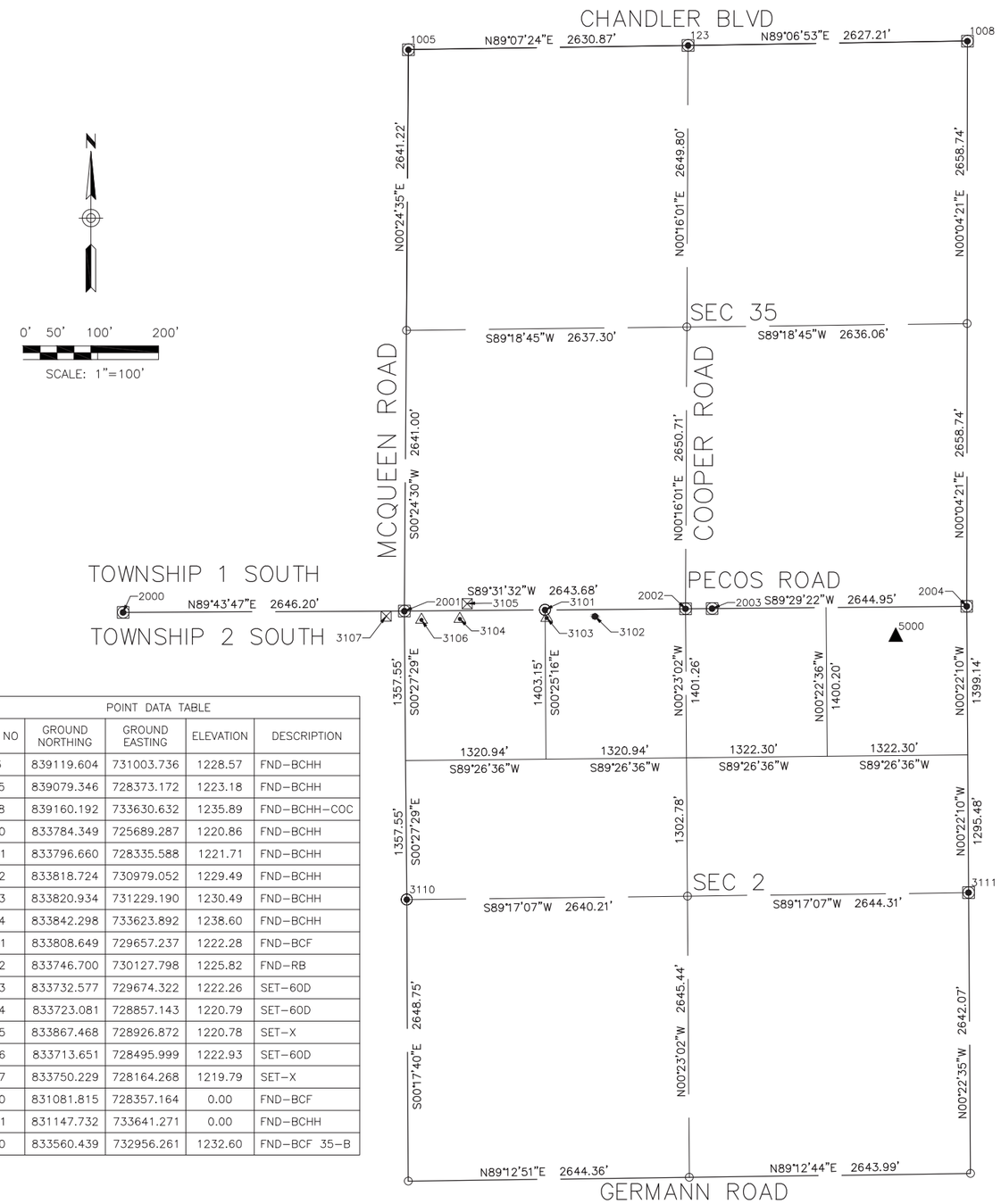


| POINT DATA TABLE | | | | |
|---|---|---|---|---|
| POINT NO | GROUND NORTHING | GROUND EASTING | ELEVATION | DESCRIPTION |
| 123 | 839119.604 | 731003.736 | 1228.57 | FND–BCHH |
| 1005 | 839079.346 | 728373.172 | 1223.18 | FND–BCHH |
| 1008 | 839160.192 | 733630.632 | 1235.89 | FND–BCHH–COC |
| 2000 | 833784.349 | 725689.287 | 1220.86 | FND–BCHH |
| 2001 | 833796.660 | 728335.588 | 1221.71 | FND–BCHH |
| 2002 | 833818.724 | 730979.052 | 1229.49 | FND–BCHH |
| 2003 | 833820.934 | 731229.190 | 1230.49 | FND–BCHH |
| 2004 | 833842.298 | 733623.892 | 1238.60 | FND–BCHH |
| 3101 | 833808.649 | 729657.237 | 1222.28 | FND–BCF |
| 3102 | 833746.700 | 730127.798 | 1225.82 | FND–RB |
| 3103 | 833732.577 | 729674.322 | 1222.26 | SET–60D |
| 3104 | 833723.081 | 728857.143 | 1220.79 | SET–60D |
| 3105 | 833867.468 | 728926.872 | 1220.78 | SET–X |
| 3106 | 833713.651 | 728495.999 | 1222.93 | SET–60D |
| 3107 | 833750.229 | 728164.268 | 1219.79 | SET–X |
| 3110 | 831081.815 | 728357.164 | 0.00 | FND–BCF |
| 3111 | 831147.732 | 733641.271 | 0.00 | FND–BCHH |
| 5000 | 833560.439 | 732956.261 | 1232.60 | FND–BCF 35–B |

## LEGEND

| | |
|---|---|
| ◉ | FOUND BRASS CAP FLUSH |
| ◉ | FOUND BRASS CAP IN HAND HOLE |
| ● | FOUND REBAR |
| ▲ | PROJECT BENCHMARK |
| | SET 60D NAIL |
| ⊠ | SET CHISELED X |
| ○ | CALCULATED POSITION |
| | SECTION LINE |
| | MID–SECTION LINE |
| FND–ACF | FOUND ALUMINUM CAP FLUSH |
| FND–BCHH | FOUND BRASS CAP IN HANDHOLE |
| FND–BCF | FOUND BRASS CAP FLUSH |
| FND–MAG | FOUND MAG NAIL |

1. COORDINATES WERE VERIFIED IN THE FIELD USING REAL TIME KINEMATIC GPS OBSERVATIONS RELATIVE TO NGS PUBLISHED CONTROL POINTS.

2. SURVEYED DURING THE MONTH OF JANUARY 2015.

3. CONTRACTOR SHALL VERIFY HORIZONTAL AND VERTICAL CONTROLS IN THE FIELD PRIOR TO CONSTRUCTION.

4. PROJECT META DATA
   UNITS:
   COORDINATES, DISTANCES AND ELEVATIONS ARE SHOWN IN INTERNATIONAL FEET.

   HORIZONTAL DATUM:
   NAD83 (2011 Epoch) ARIZONA CENTRAL ZONE

   HORIZONTAL ADJUSTMENT:
   COMBINED SCALE FACTOR (CSF): 0.999847120
   GROUND NORTHING (CSF) = GRID NORTHING
   GROUND EASTING (CSF) = GRID EASTING

   VERTICAL DATUM:
   CITY OF CHANDLER (NGVD '29)

   PROJECT BENCHMARK:
   POINT NUMBER 5000
   FOUND CITY OF CHANDLER PUBLISHED BENCHMARK DESCRIBED AS:
   BRASS CAP IN CONCRETE AT CANYON OAKS WY / DERRINGER WY
   PUBLISHED ELEVATION = 1232.64'
   OBSERVED ELEVATION = 1232.60'

5. THE COORDINATES PRESENTED ARE SHOWN TO THREE DECIMAL PLACES FOR CALCULATION PURPOSES AND ARE NOT REPRESENTATIVE OF THE PRECISION OF THE SURVEY MEASUREMENTS

6. THIS IS NOT A PROPERTY BOUNDARY SURVEY.

Call at least two full working days before you begin excavation
ARIZONA 811
Blue Stake, Inc.
Dial 8-1-1 or 1-800-STAKE-IT (1-800-782-5348)
In Maricopa County (602) 263-1100

| REV. NO. | DATE | DRWN | CHKD | REMARKS |
|---|---|---|---|---|

DESIGNED BY: KJN
DRAWN BY: JPG
SHEET CHK'D BY: CSD
CROSS CHK'D BY: VG
APPROVED BY: JRF
DATE: 1/30/15

PRELIMINARY SUBMITTAL
60%
NOT FOR CONSTRUCTION OR RECORDING

Dibble Engineering

CITY OF CHANDLER, ARIZONA
MUNICIPAL UTILITIES DEPARTMENT
LARGE VALVE REPLACEMENT

# SURVEY CONTROL

PROJECT NO. PROJECT NO.
FILE NAME: 1471 CTRL.DWG
SHEET NO.
G4
SHEET 5 OF 12

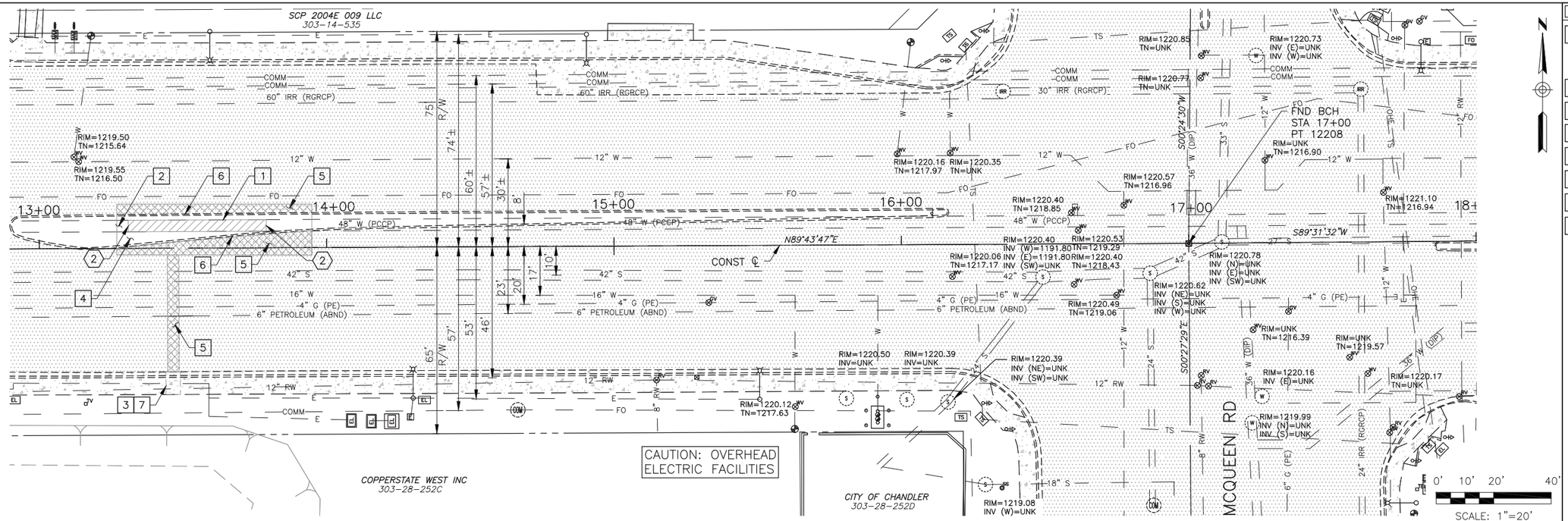


PECOS ROAD

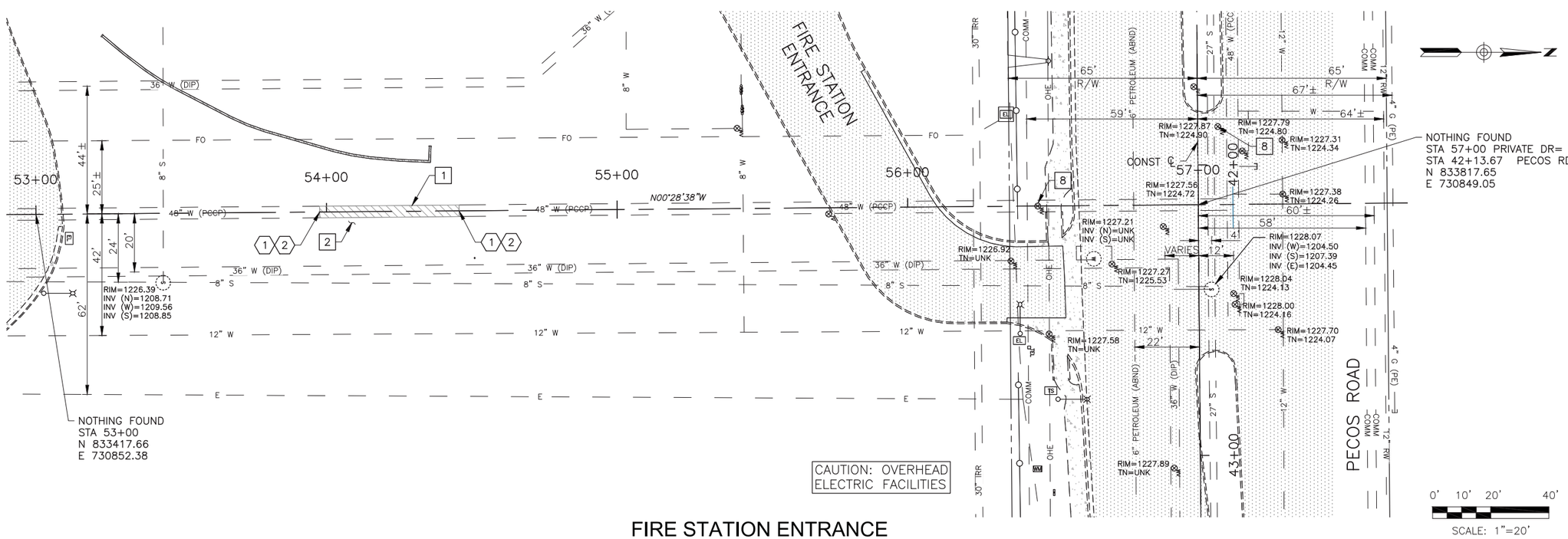


FIRE STATION ENTRANCE

## REMOVAL NOTES

| | | |
|---|---|---|
| 1 | STA 13+31 TO STA 13+79<br>STA 53+97 TO STA 54+45<br>REMOVE EXST 48" PCCP PIPE TO NEAREST JOINTS | 96 LF |
| 2 | REMOVE LANDSCAPE | 1 LS |
| 3 | REMOVE CONCRETE CURB & GUTTER | 5 LF |
| 4 | REMOVE BRICK MEDIAN | 90 SF |
| 5 | REMOVE AC PAVEMENT | 90 SY |
| 6 | REMOVE VERTICAL CURB | 137 LF |
| 7 | REMOVE CONCRETE SIDEWALK | 30 SF |
| 8 | ABANDON IN PLACE 48" BUTTERFLY VALVE. REMOVE MINIMUM 12" OF EXISTING VALVE BOX & COVER. BACKFILL WITH 1/2 SACK CLSM. MATCH EXISTING GRADE | 2 EA |

## REFERENCE NOTES

1. APPROXIMATE LOCATION OF EXST PCCP PIPE JOINTS PER AMERON LAY DRAWINGS
2. CONTRACTOR TO FIELD VERIFY JOINT LOCATIONS

| REV. NO. | DATE | DRWN | CHKD | REMARKS |
|---|---|---|---|---|

DESIGNED BY: KJN
DRAWN BY: RAK
SHEET CHK'D BY: RAK
CROSS CHK'D BY: KJN
APPROVED BY: JRF
DATE: 6/5/15

PRELIMINARY SUBMITTAL
60%
NOT FOR CONSTRUCTION OR RECORDING

Dibble Engineering

CITY OF CHANDLER, ARIZONA
MUNICIPAL UTILITIES DEPARTMENT
LARGE VALVE REHABILITATION/
REPLACEMENT PROGRAM

DEMOLITION PLAN

PROJECT NO. PROJECT NO.
FILE NAME: 1471_02-D1.DWG
SHEET NO.
D1
SHEET 6 OF 12

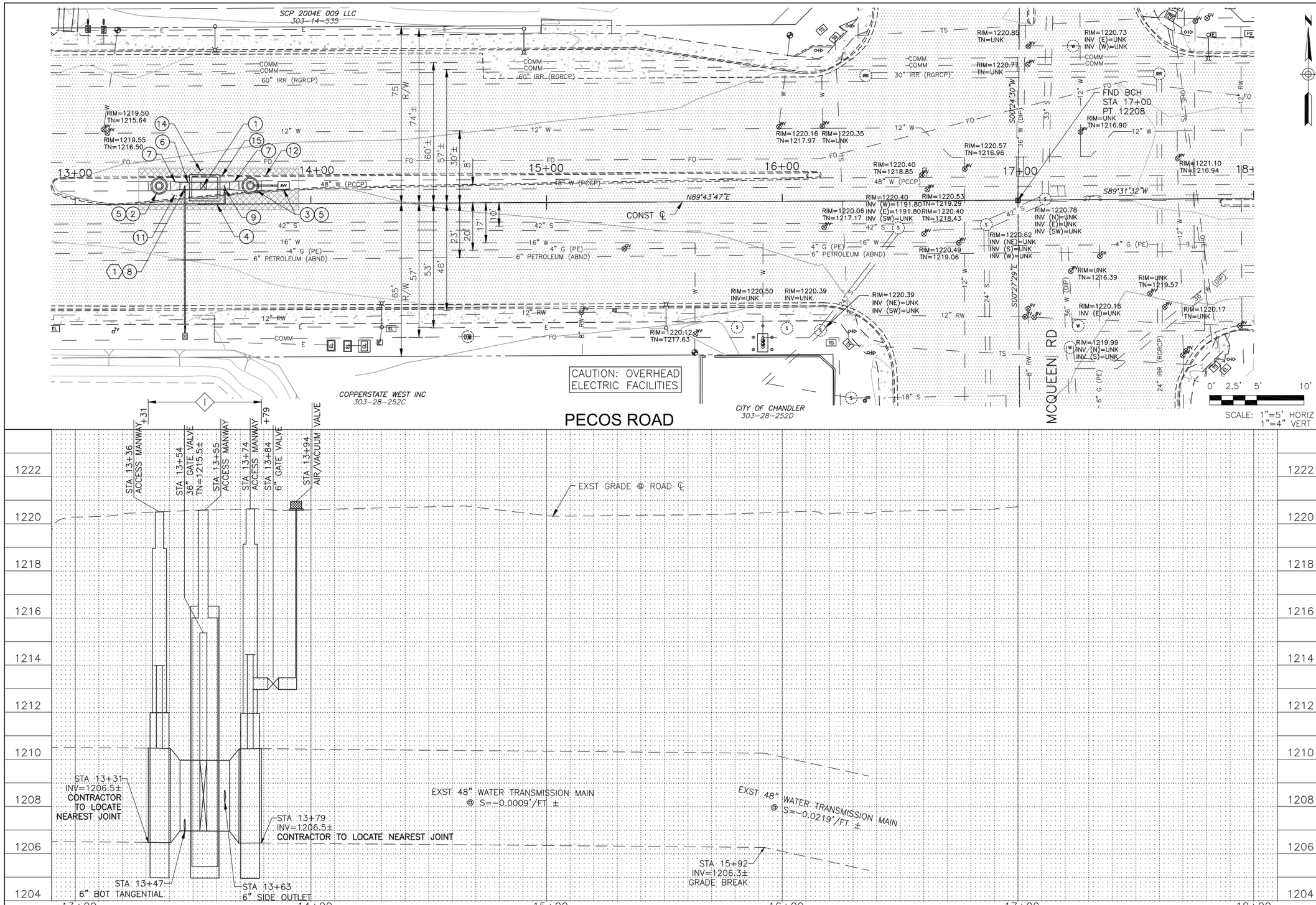


## CONSTRUCTION NOTES

| | | |
|---|---|---|
| 1 | STA 13+55<br>36" GATE VALVE<br>36" DISMANTLING JOINT<br>11'X9' VALVE VAULT<br>DET 1, DWG CD1 | <br>1 EA<br>1 EA<br>1 EA |
| 2 | STA 13+36<br>ACCESS MANWAY<br>36"X30" FLANGED OUTLET<br>DET 2, DWG CD2 | <br>1 EA<br>1 EA |
| 3 | STA 13+74<br>ACCESS MANWAY<br>DET 1, DWG CD3<br>AIR/VACUUM VALVE ASSEMBLY<br>6" DIP<br>6" GATE VALVE<br>VALVE BOX & COVER<br>MAG STD DET 391-1, TYPE 'C'<br>36"X30" FLANGED OUTLET<br>CONCRETE ENCASEMENT<br>DET 3, DWG CD2 | <br>1 EA<br><br>1 EA<br>4 LF<br>1 EA<br>1 EA<br><br>1 EA<br>1 EA |
| 4 | BYPASS ASSEMBLY<br>6" DIP (RESTRAINED)<br>6" TEE<br>6" GATE VALVE<br>VALVE BOX & COVER<br>MAG STD DET 391-1, TYPE 'C'<br>INSULATING FLANGE KIT<br>6" 90° BEND | <br>24 LF<br>1 EA<br>2 EA<br>2 EA<br><br>2 EA<br>1 EA |
| 5 | STA 13+31 TO STA 13+41,<br>STA 13+70 TO STA 13+79<br>48" WATER TRANSMISSION MAIN<br>(WELDED JOINTS) | <br><br>19 LF |
| 6 | STA 13+45 TO STA 13+66<br>36" WATER TRANSMISSION MAIN<br>(WELDED JOINTS) | <br>21 LF |
| 7 | STA 13+43, STA 13+68<br>48"X36" REDUCER | <br>2 EA |
| 8 | STA 13+47<br>36"X6" BOTTOM TANGENTIAL | <br>NPI |
| 9 | STA 13+64<br>36"X6" SIDE OUTLET | <br>NPI |
| 10 | REPLACE CONCRETE SIDEWALK<br>MAG STD DET 230 | 60 SF |
| 11 | RESTORE DISTURBED LANDSCAPING<br>AND IRRIGATION TO ORIGINAL CONDITION | 1 LS |
| 12 | REPLACE MEDIAN IN KIND | 90 SF |
| 14 | BACKFILL, PAVEMENT & SURFACE<br>REPLACEMENT<br>MAG STD DET 200-1 'T-TOP'<br>MODIFIED<br>BACKFILL SHALL BE 1/2 SACK CLSM<br>SEE CITY OF CHANDLER<br>GENERNAL NOTE 11 | 71 SY |
| 15 | REPLACE CONCRETE CURB<br>MAG STD DET 222, TYPE 'A' | 137 LF |
| 16 | REPLACE CONCRETE CURB AND GUTTER<br>MAG STD DET 220, TYPE 'A' | 10 LF |

## REFERENCE NOTES

1. SEE OUTLET CONNECTION DWG PP3 FOR DE-WATERING STANDPIPE PLAN & PROFILE

CONTRACTOR SHALL VERIFY HORIZONTAL AND VERTICAL LOCATION OF UTILITIES PRIOR TO CONSTRUCTION AND PRIOR TO ORDERING MATERIALS

Call at least two full working days before you begin excavating
ARIZONA 811
Blue Stake, Inc.
Dial 811 or 1-800-STAKE-IT (Arizona Only)
for Maricopa County (602) 263-1100

| REV. NO. | DATE | DRWN | CHKD | REMARKS |
|---|---|---|---|---|
| | | | | |

DESIGNED BY: KJN
DRAWN BY: RAK
SHEET CHK'D BY: RAK
CROSS CHK'D BY: KJN
APPROVED BY: JRF
DATE: 6/5/15

PRELIMINARY SUBMITTAL
60%
NOT FOR CONSTRUCTION OR RECORDING

Dibble Engineering

CITY OF CHANDLER, ARIZONA
MUNICIPAL UTILITIES DEPARTMENT
LARGE VALVE REHABILITATION/
REPLACEMENT PROGRAM

PLAN & PROFILE
PECOS ROAD

PROJECT NO. PROJECT NO.
FILE NAME: 1471_02-PP1.DWG
SHEET NO.
PP1
SHEET 7 OF 12

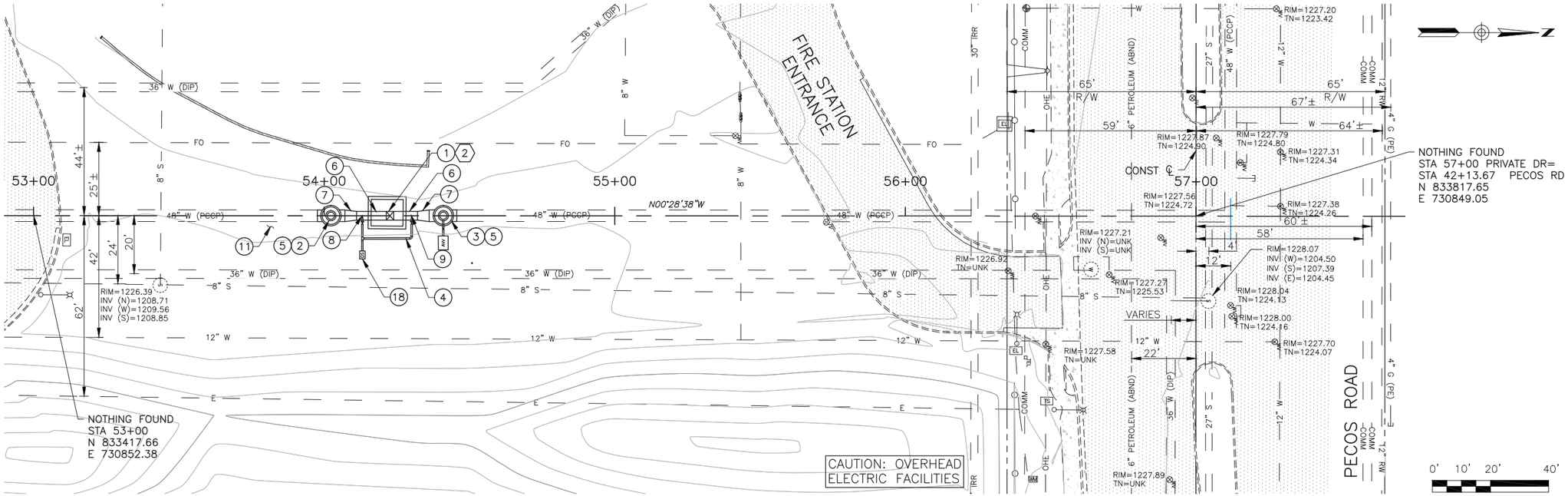


## FIRE STATION ENTRANCE

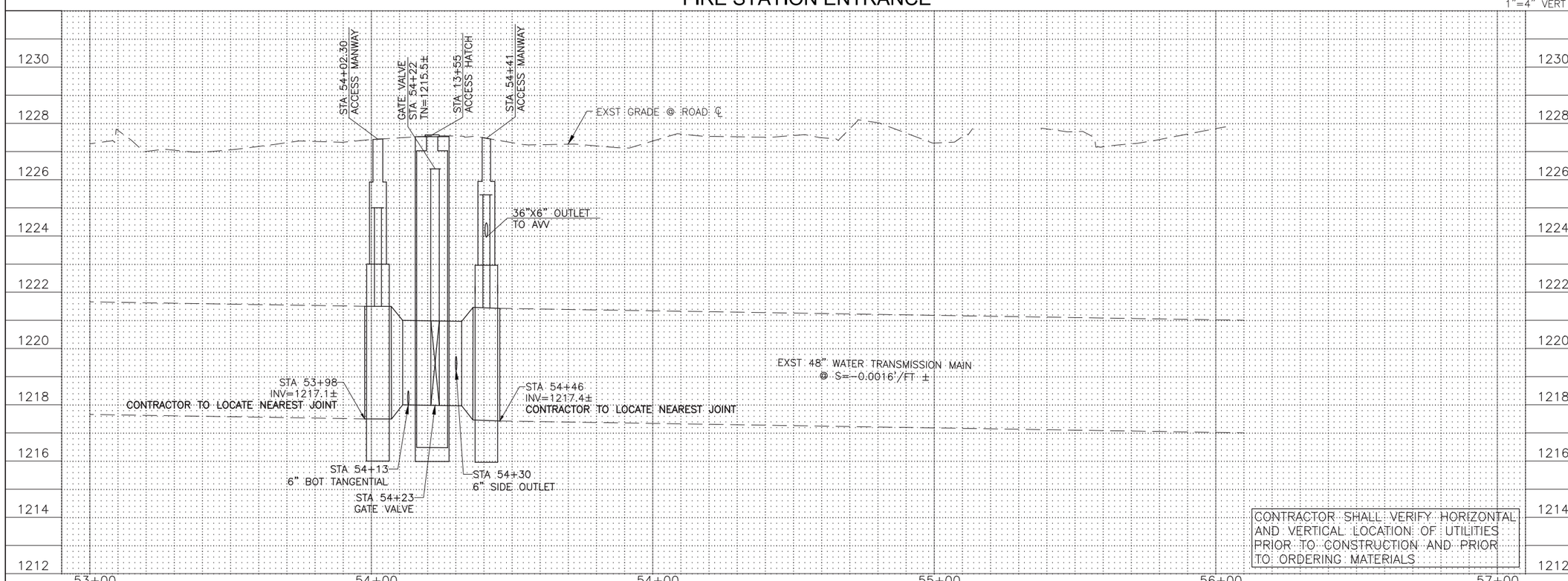


## CONSTRUCTION NOTES

| | | |
|---|---|---|
| (1) | STA 54+23 | |
| | 36" GATE VALVE | 1 EA |
| | 36" DISMANTLING JOINT | 1 EA |
| | 11'X9' VALVE VAULT | 1 EA |
| | DET 1, DWG CD1 | |
| (2) | STA 54+02 | |
| | ACCESS MANWAY | 1 EA |
| | 36"X30" FLANGED OUTLET | 1 EA |
| | DET 2, DWG CD2 | |
| (3) | STA 54+41 | |
| | ACCESS MANWAY | 1 EA |
| | DET 3, DWG CD3 | |
| | AIR/VACUUM VALVE ASSEMBLY | 1 EA |
| | 6" DIP | 4 LF |
| | 6" GATE VALVE | 1 EA |
| | VALVE BOX & COVER | 1 EA |
| | MAG STD DET 391-1, TYPE 'C' | |
| | 36"X30" FLANGED OUTLET | 1 EA |
| | CONCRETE ENCASEMENT | 1 EA |
| | DET 3, DWG CD2 | |
| | 30"X6" FLANGED OUTLET | 1 EA |
| (4) | BYPASS ASSEMBLY | |
| | 6" DIP (RESTRAINED) | 28 LF |
| | 6" TEE | 1 EA |
| | 6" GATE VALVE | 2 EA |
| | VALVE BOX & COVER | 3 EA |
| | MAG STD DET 391-1, TYPE 'C' | |
| | INSULATING FLANGE KIT | 2 EA |
| | 6" 90° BEND | 1 EA |
| (5) | STA 53+98 TO STA 54+07, STA 54+36 TO STA 54+46 48" WATER TRANSMISSION MAIN (WELDED JOINTS) | 19 LF |
| (6) | STA 54+11 TO STA 54+32 36" WATER TRANSMISSION MAIN (WELDED JOINTS) | 21 LF |
| (7) | STA 54+09, STA 54+34 48"X36" REDUCER | 1 EA |
| (8) | STA 54+13 36"X6" BOTTOM TANGENTIAL | NPI |
| (9) | STA 54+30 36"X6" SIDE OUTLET | NPI |
| (11) | RESTORE DISTURBED LANDSCAPING AND IRRIGATION TO ORIGINAL CONDITION | 1 LS |
| (18) | 12" DEWATERING STANDPIPE DET 2, DWG CD3 | 1 EA |

## REFERENCE NOTES

(2) SEE DET 1, DWG CD1 FOR GATE VALVE INSTALLATION & ORIENTATION

| REV. NO. | DATE | DRWN | CHKD | REMARKS |
|---|---|---|---|---|

DESIGNED BY: KJN
DRAWN BY: RAK
SHEET CHK'D BY: RAK
CROSS CHK'D BY: KJN
APPROVED BY: JRF
DATE: 6/5/15

PRELIMINARY SUBMITTAL
60%
NOT FOR CONSTRUCTION OR RECORDING

Dibble Engineering

CITY OF CHANDLER, ARIZONA
MUNICIPAL UTILITIES DEPARTMENT
LARGE VALVE REHABILITATION/
REPLACEMENT PROGRAM

PLAN & PROFILE
FIRE STATION ENTRANCE

PROJECT NO. PROJECT NO.
FILE NAME: 1471_02-PP2.DWG
SHEET NO.
PP2
SHEET 8 OF 12

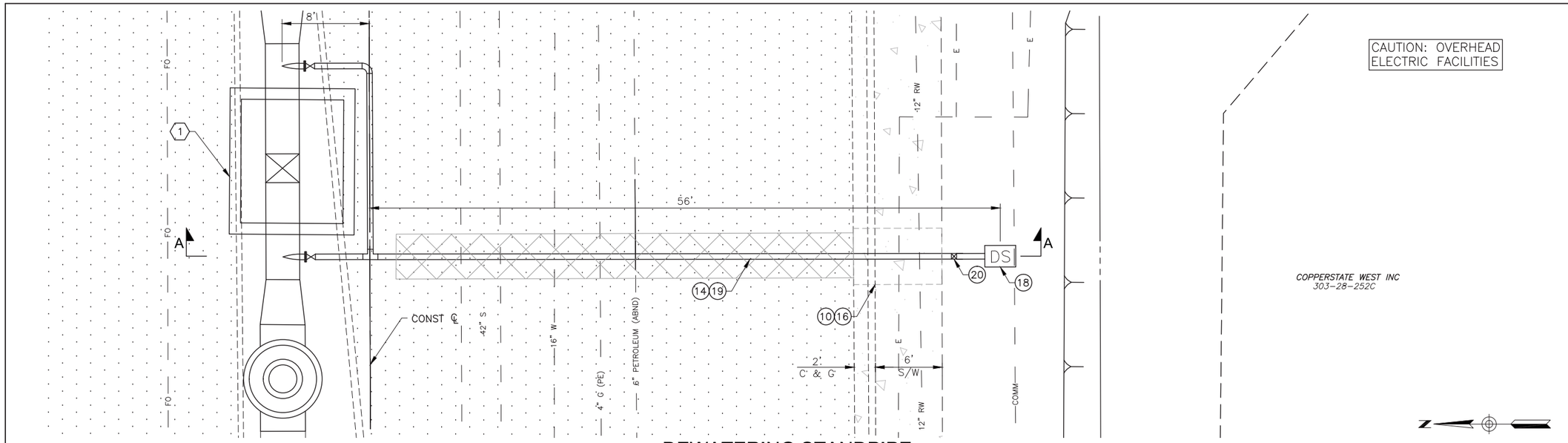


DEWATERING STANDPIPE
PECOS ROAD
DWG PP1

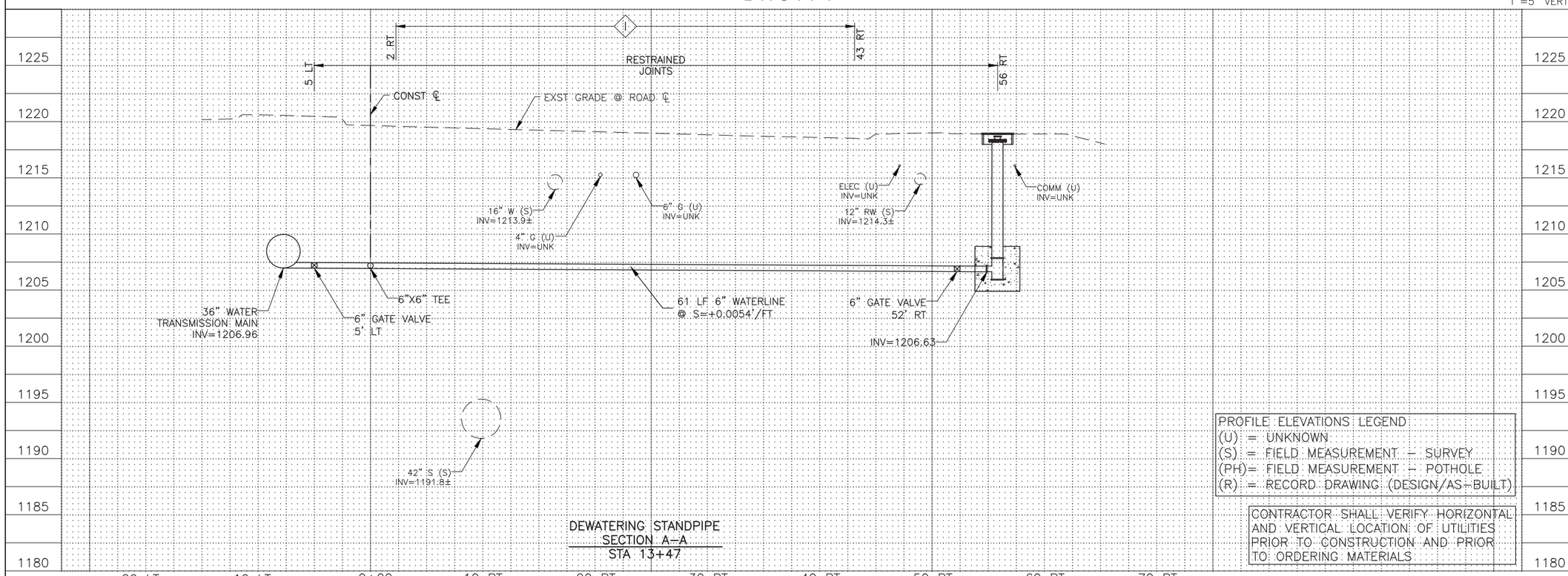


DEWATERING STANDPIPE
SECTION A–A
STA 13+47

PROFILE ELEVATIONS LEGEND
(U) = UNKNOWN
(S) = FIELD MEASUREMENT – SURVEY
(PH)= FIELD MEASUREMENT – POTHOLE
(R) = RECORD DRAWING (DESIGN/AS–BUILT)

CONTRACTOR SHALL VERIFY HORIZONTAL AND VERTICAL LOCATION OF UTILITIES PRIOR TO CONSTRUCTION AND PRIOR TO ORDERING MATERIALS

## CONSTRUCTION NOTES

| | | |
|---|---|---|
| 10 | REPLACE CONCRETE SIDEWALK<br>MAG STD DET 230 | 60 SF |
| 14 | BACKFILL, PAVEMENT & SURFACE REPLACEMENT<br>MAG STD DET 200–1 'T–TOP' MODIFIED<br>BACKFILL SHALL BE 1/2 SACK CLSM<br>SEE CITY OF CHANDLER GENERNAL NOTE 11 | 19 SY |
| 16 | REPLACE CONCRETE CURB AND GUTTER<br>MAG STD DET 220, TYPE 'A' | 10 LF |
| 18 | 56' RT<br>12" DEWATERING STANDPIPE<br>DET 2, DWG CD3 | 1 EA |
| 19 | 6" DIP (RESTRAINED JOINTS) | 61 EA |
| 20 | 6" GATE VALVE<br>VALVE BOX & COVER<br>MAG STD DET 391–1, TYPE 'B' | 1 EA |

## REFERENCE NOTES

1. SEE PLAN & PROFILE DWG PP1

Call at least two full working days before you begin excavating
ARIZONA 811
Blue Stake, Inc.
Dial 811 or 1-(800)-STAKE-IT (Outside Maricopa County (602)263-1100) for Maricopa County

| REV. NO. | DATE | DRWN | CHKD | REMARKS |
|---|---|---|---|---|

DESIGNED BY: KJN
DRAWN BY: RAK
SHEET CHK'D BY: RAK
CROSS CHK'D BY: KJN
APPROVED BY: JRF
DATE: 6/5/15

PRELIMINARY SUBMITTAL
60%
NOT FOR CONSTRUCTION OR RECORDING

Dibble Engineering

CITY OF CHANDLER, ARIZONA
MUNICIPAL UTILITIES DEPARTMENT
LARGE VALVE REHABILITATION/
REPLACEMENT PROGRAM

PLAN & PROFILE
LATERAL PIPING

PROJECT NO. PROJECT NO.
FILE NAME: 1471_02-PP3.DWG
SHEET NO.
PP3
SHEET 9 OF 12

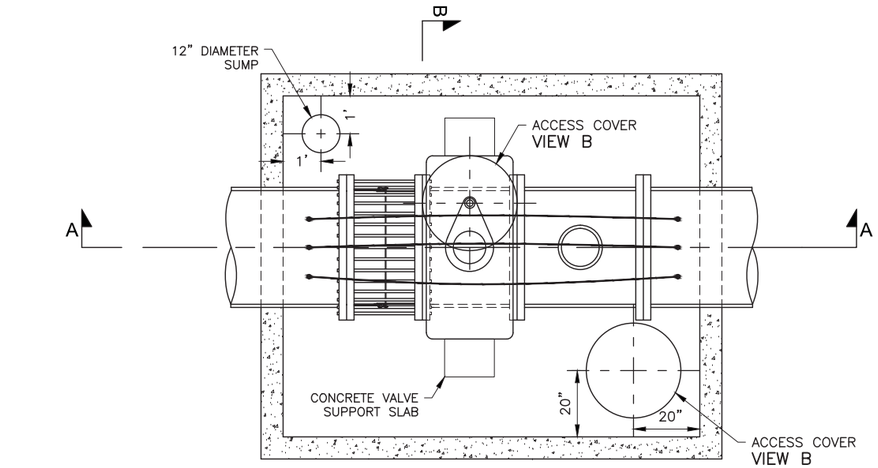


PLAN VIEW

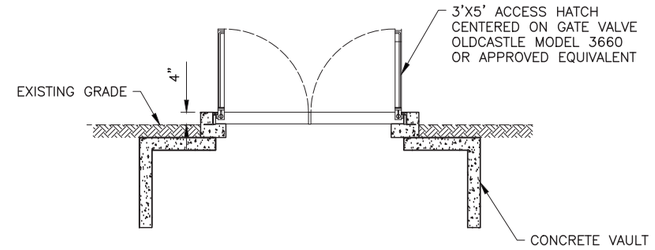


VIEW A
ACCESS HATCH
TO BE USED ON VALVE
VAULT SHOWN ON DWG PP2

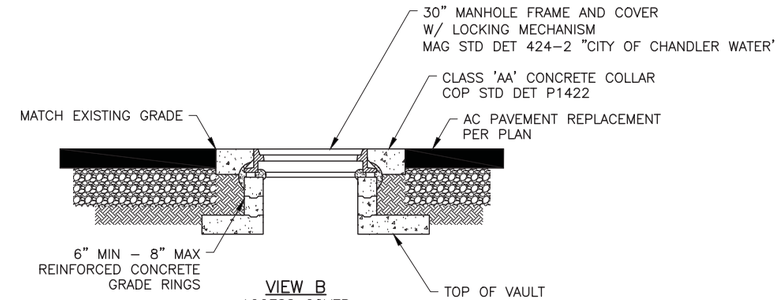


VIEW B
ACCESS COVER
TO BE USED ON VALVE
VAULT SHOWN ON DWG PP1

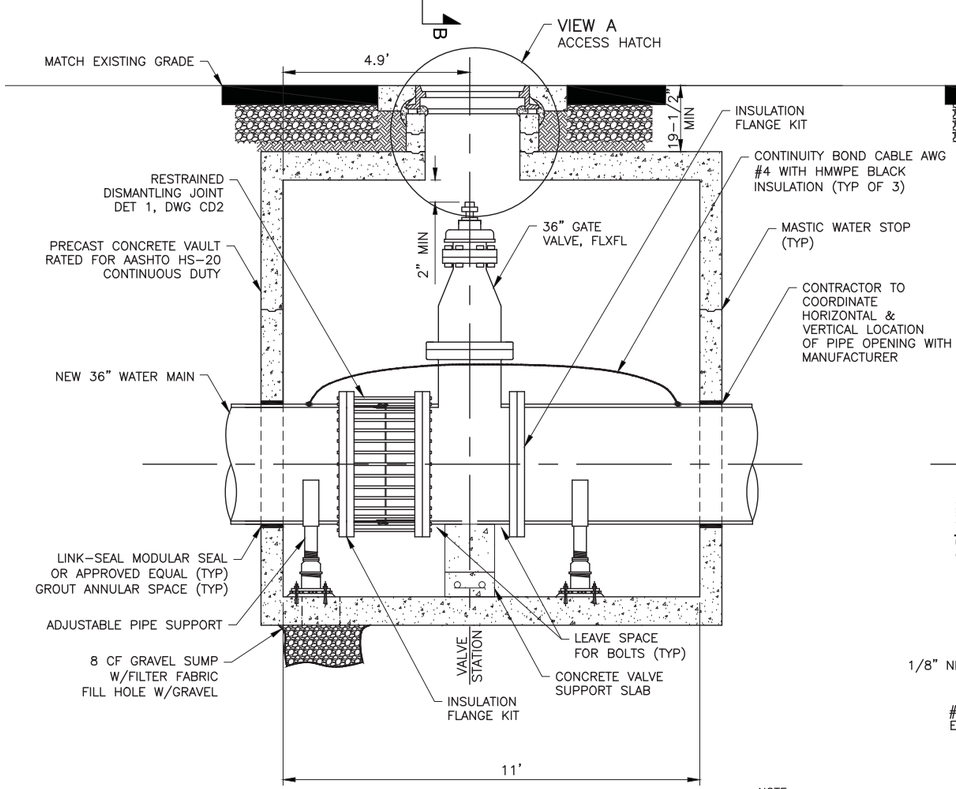


SECTION A–A

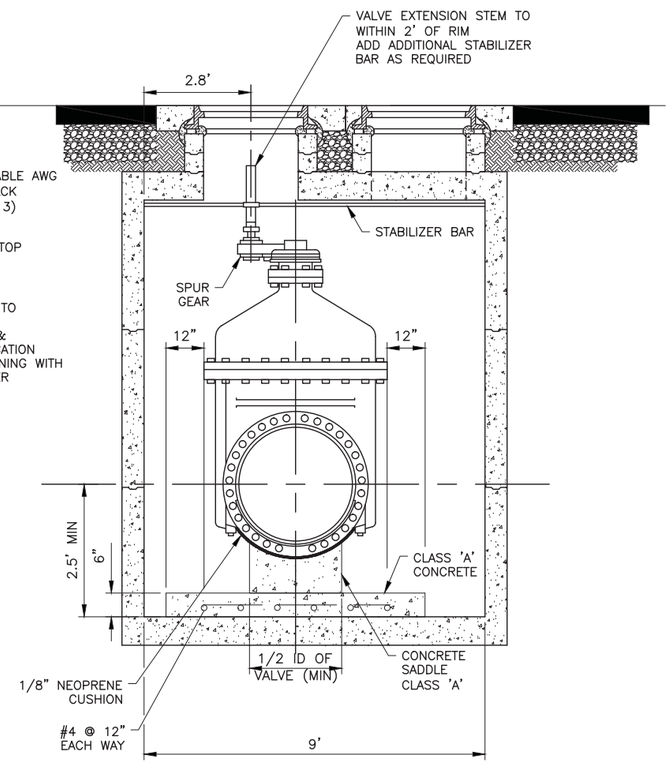


SECTION B–B

NOTE:

1. HS20-44 LOADING
2. SHOP DRAWING REQUIRED
3. ELECTRICALLY BOND PIPE SEGMENTS ACROSS VALVE

(1) APPLY COATING TO ALL EXPOSED METAL SURFACES PER APPLICABLE SPECIFICATIONS

(1) GATE VALVE VAULT
SCALE: 1"=2'

0' 1' 2' 4'
SCALE: 1"=2'

| REV. NO. | DATE | DRWN | CHKD | REMARKS |
|---|---|---|---|---|

DESIGNED BY: KJN
DRAWN BY: RAK
SHEET CHK'D BY: RAK
CROSS CHK'D BY: KJN
APPROVED BY: JRF
DATE: 6/5/15

PRELIMINARY SUBMITTAL
60%
NOT FOR CONSTRUCTION OR RECORDING

Dibble Engineering

CITY OF CHANDLER, ARIZONA
MUNICIPAL UTILITIES DEPARTMENT
LARGE VALVE REHABILITATION/
REPLACEMENT PROGRAM

CIVIL DETAILS

PROJECT NO. PROJECT NO.
FILE NAME: 1471_02-CD1.DWG
SHEET NO.
CD1
SHEET 10 OF 12

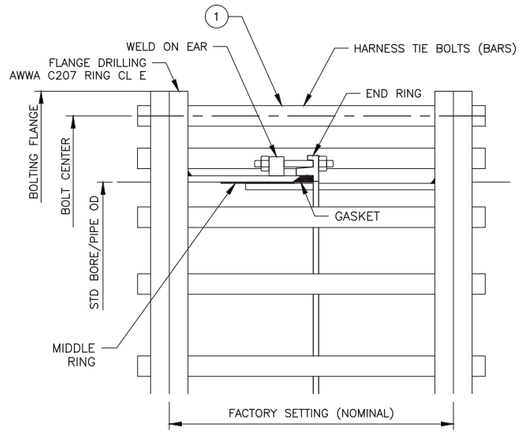


VIEW A
SCALE: 1/2"=1'

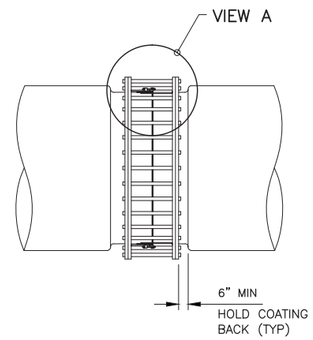


SIDE
SCALE: 1"=3'

NOTES:
1. DISMANTLING JOINT DRAWN FOR 36" PIPELINE
2. SHOP SUBMITTAL REQUIRED FROM PIPE MANUFACTURER ON ALL PIPE DIAMETERS

(1) APPLY COATING TO ALL EXPOSED METAL SURFACES AS INDICATED IN APPLICABLE SPECIFICATIONS

## (1) RESTRAINED DISMANTLING JOINT
SCALE: NOTED

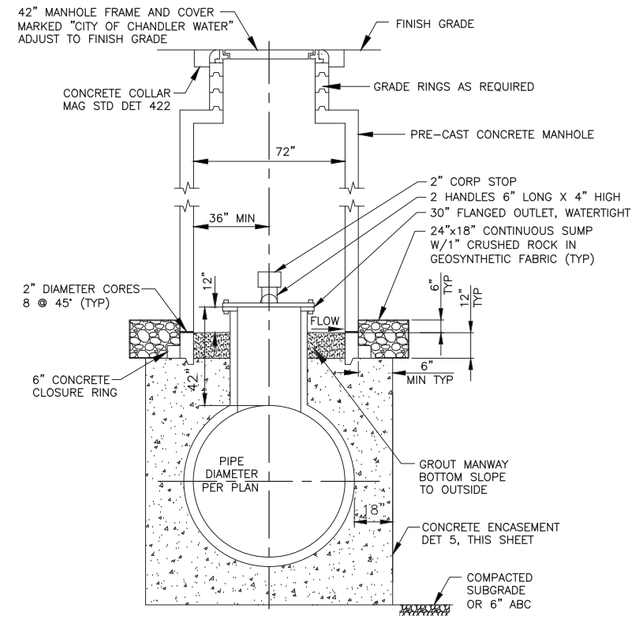


NOTE:
1. HS20-44 LOADING REQUIRED
2. SHOP DRAWING REQUIRED

## (2) ACCESS MANWAY
SCALE: NTS

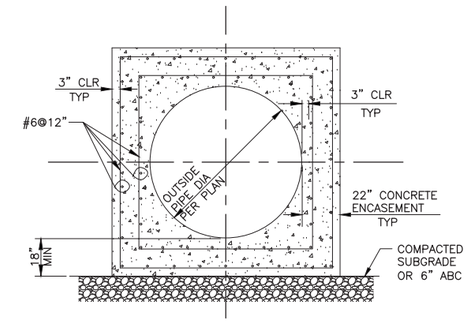


## (3) CONCRETE ENCASEMENT
SCALE: NTS

NOTES:

1. CONTRACTOR SHALL CONFIRM EXACT DIMENSIONS OF EXISTING PIPE INCLUDING, BUT NOT LIMITED TO: LENGTH, DIAMETER, AND JOINT CONFIGURATION PRIOR TO INSTALLATION OF NEW PIPE.
2. CONTRACTOR SHALL USE "EXTREME CAUTION" NOT TO DAMAGE THE BELL AND SPIGOT OF THE EXISTING PCCP WATERLINE TO REMAIN IN PLACE. IF DAMAGED, CONTRACTOR SHALL REPLACE THE ENTIRE SECTION OF DAMAGED PIPE IN-KIND AT NO ADDITIONAL COST.
3. WHEN MECHANICALLY COMPACTING BACKFILL MATERIAL, THE BACKFILL MATERIAL SHALL BE WITHIN (2) PERCENTAGE POINTS OF OPTIMUM AS DETERMINED BY AASHTO T-99 AT THE TIME OF COMPACTION.
4. THE LOCATIONS OF THE NEW INSTALLATIONS AS SHOWN ON THE PLANS ARE APPROXIMATE. THE CONTRACTOR SHALL VERIFY THE EXACT LOCATION OF THE PCCP PIPE SECTION TO BE REMOVED, AND ADJUST THE NEW INSTALLATIONS ACCORDINGLY.
5. MORTAR COATINGS SHALL CONFORM TO AWWA C-205.

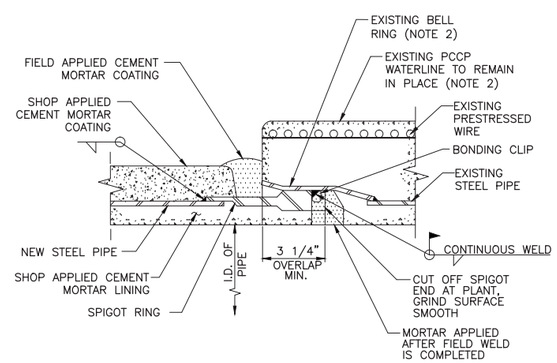


NEW SPIGOT TO EXISTING BELL

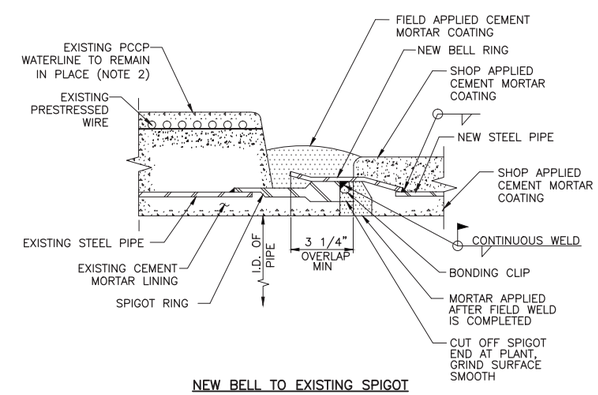


NEW BELL TO EXISTING SPIGOT

## (4) CONNECTION TO EXST PCCP PIPE
NO SCALE

0' 1.5' 3' 6'
SCALE: 1"=3'

| REV. NO. | DATE | DRWN | CHKD | REMARKS |
|---|---|---|---|---|

DESIGNED BY: KJN
DRAWN BY: RAK
SHEET CHK'D BY: RAK
CROSS CHK'D BY: KJN
APPROVED BY: JRF
DATE: 6/5/15

PRELIMINARY SUBMITTAL
60%
NOT FOR CONSTRUCTION OR RECORDING

Dibble Engineering

CITY OF CHANDLER, ARIZONA
MUNICIPAL UTILITIES DEPARTMENT
LARGE VALVE REHABILITATION/ REPLACEMENT PROGRAM

CIVIL DETAILS

PROJECT NO. PROJECT NO.
FILE NAME: 1471_02-CD2.DWG
SHEET NO.
CD2
SHEET 11 OF 12

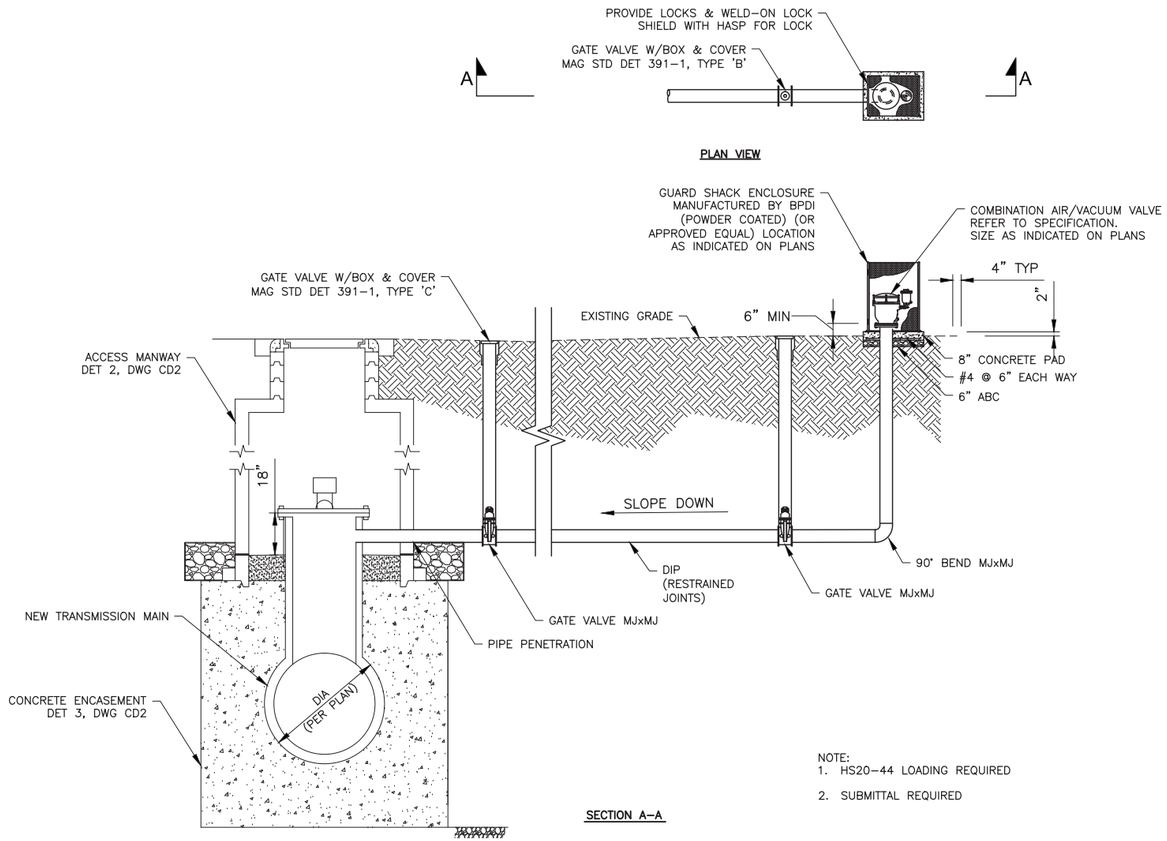


1 ACCESS MANWAY W/ AIR/VACUUM VALVE ASSEMBLY
SCALE: 1"=3'

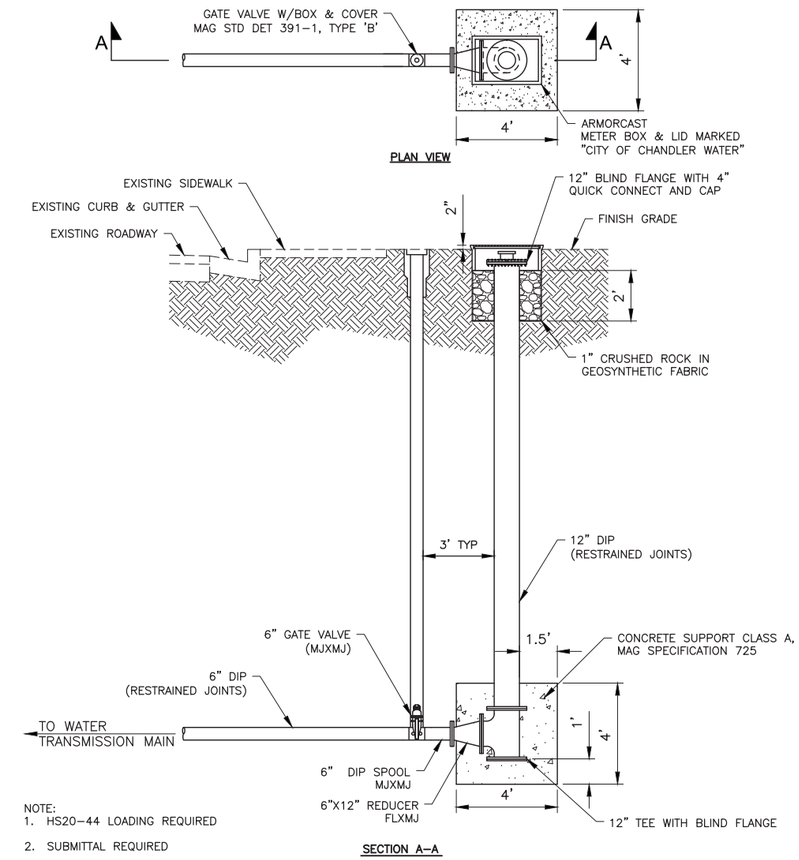


2 DEWATERING STANDPIPE
SCALE: 1"=3'

0' 1.5' 3' 6'
SCALE: 1"=3'

| REV. NO. | DATE | DRWN | CHKD | REMARKS |
|---|---|---|---|---|

DESIGNED BY: KJN
DRAWN BY: RAK
SHEET CHK'D BY: RAK
CROSS CHK'D BY: KJN
APPROVED BY: JRF
DATE: 6/5/15

PRELIMINARY SUBMITTAL
60%
NOT FOR CONSTRUCTION OR RECORDING

Dibble Engineering

CITY OF CHANDLER, ARIZONA
MUNICIPAL UTILITIES DEPARTMENT
LARGE VALVE REHABILITATION/ REPLACEMENT PROGRAM

CIVIL DETAILS

PROJECT NO. PROJECT NO.
FILE NAME: 1471_02-CD3.DWG
SHEET NO.
CD3
SHEET 12 OF 12