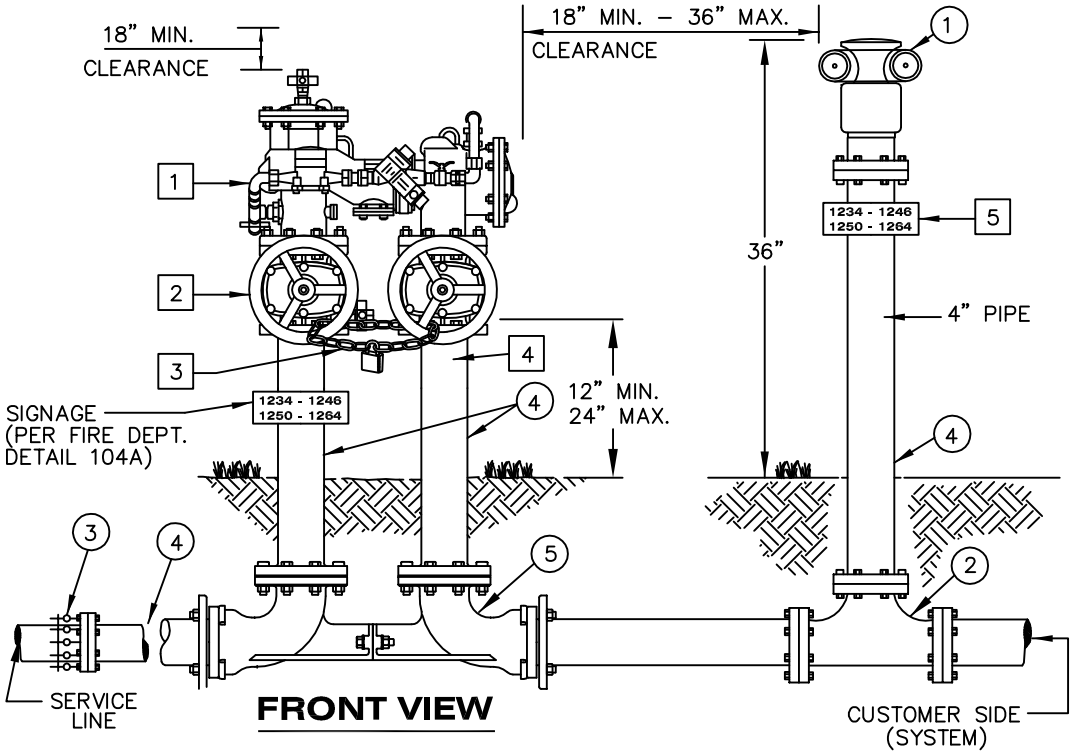

FRONT VIEW

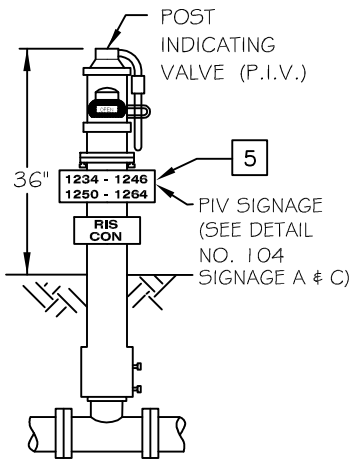

FOR SINGLE RISER SYSTEMS, A PIV IS REQUIRED AS RISER CONTROL VALVE WITHIN 10 FEET OF THE BUILDING. IF PIV IS ELIMINATED THEN FD105 SHALL BE USED.

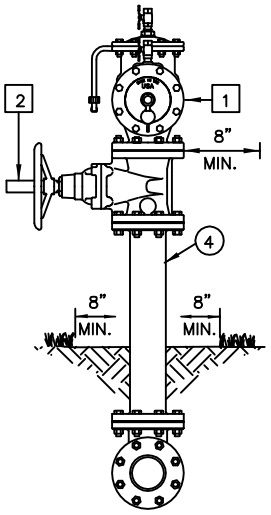

SIDE VIEW

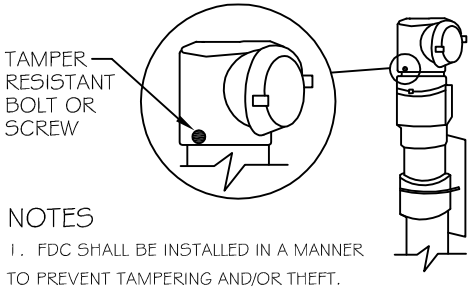

NOTES

1. FDC SHALL BE INSTALLED IN A MANNER TO PREVENT TAMPERING AND/OR THEFT.
2. PRIOR TO INSTALLING THE FDC ON THE CHECK VALVE, THREADLOCKER, OR EQUIVALENT, SHALL BE PLACED ON THE THREADS.
3. TAMPER RESISTANT BOLT OR SCREW SHALL BE INSTALLED IN THE BASE OF THE FDC BY DRILLING A 3/8 INCH HOLE THROUGH THE MANIFOLD CASE AND INNER THREADS.

LIST OF MATERIALS

1. FIRE DEPT. SIAMESE CONNECTION (FDC) (RED).
2. FLANGED TEE.
3. FLANGED ADAPTER, (WHEN REQUIRED).
4. PIPE SPOOL. (FLANGED D.I.P.)
5. 90° ELBOW. (FLANGED D.I.P.)

SCREENING METHOD

1. SCREEN WALLS, PLANT MATERIAL, BERMING AND/OR BUILDING ORIENTATION SHALL BE SUBMITTED TO DEVELOPMENT SERVICES FOR REVIEW AND APPROVAL PRIOR TO START OF CONSTRUCTION.
2. METHOD OF SCREENING USED MAY REQUIRE FDC'S TO BE REMOTELY LOCATED. FDC LOCATION AND METHOD OF INSTALLATION SHALL BE INCLUDED ON SCREENING PLAN SUBMITTED TO DEVELOPMENT SERVICES FOR REVIEW AND APPROVAL.

NOTES

1. DOUBLE CHECK DETECTOR ASSEMBLY WITH BYPASS METER SHALL BE UL LISTED OR FM APPROVED FOR FIRE PROTECTION USE AND SHALL BE AS APPROVED BY U.S.C. FOUNDATION FOR CROSS-CONNECTION CONTROL AND HYDRAULIC RESEARCH. THIS ASSEMBLY IS TO BE USED FOR POLLUTION HAZARDS ONLY AS RECOMMENDED IN THE AWWA-M14 MANUAL.
2. ALL PIPING, VALVES, FITTINGS AND APPURTENANCES DOWNSTREAM OF THE SERVICE LINE SIDE O.S.& Y. VALVE SHALL BE APPROVED FOR FIRE PROTECTION USE AND INSTALLED PER N.F.P.A. #24.
3. THE ENTIRE ASSEMBLY SHALL BE SECURED WITH CHAIN AND LOCK.
4. BACKFLOW DEVICES SHALL BE PAINTED TO MATCH THE LANDSCAPE (DESERT BROWN).
5. FDC'S AND PIV'S SHALL BE PAINTED RED AND SIGNED PER FIRE DEPT. DETAIL NO. 104 SIGNAGE A, B, OR C.

GENERAL NOTES:

1. FDC'S SHALL BE LOCATED WITHIN 150 FEET OF A PUBLIC (YELLOW) FIRE HYDRANT AT THE ENTRANCE TO THE SITE.
2. A REGISTERED STRUCTURAL ENGINEER SHALL SEAL THE DESIGN OF THE THRUST BLOCKS, SUPPORTS AND TIE ROD ASSEMBLIES.
3. MAINTAIN 3 FEET CLEARANCE AROUND PIV AND FDC. (NO TREES, BUSHES, FENCES, CACTUS OR RIVER ROCK.)
4. MAX DISTANCE BETWEEN FDC AND BACKFLOW MAY BE MODIFIED ONLY AS APPROVED BY THE FIRE MARSHAL OR DESIGNER.

DETAIL NO.				
FD102	CITY OF CHANDLER STANDARD DETAIL	**FIRE LINE INSTALLATION (NO ON-SITE HYDRANTS REQUIRED / FOR SMALL SITES AND/OR SINGLE BUILDINGS)**	APPROVED: FIRE MARSHAL DATE: 4/04/2012	**FD102**
NTS				NTS

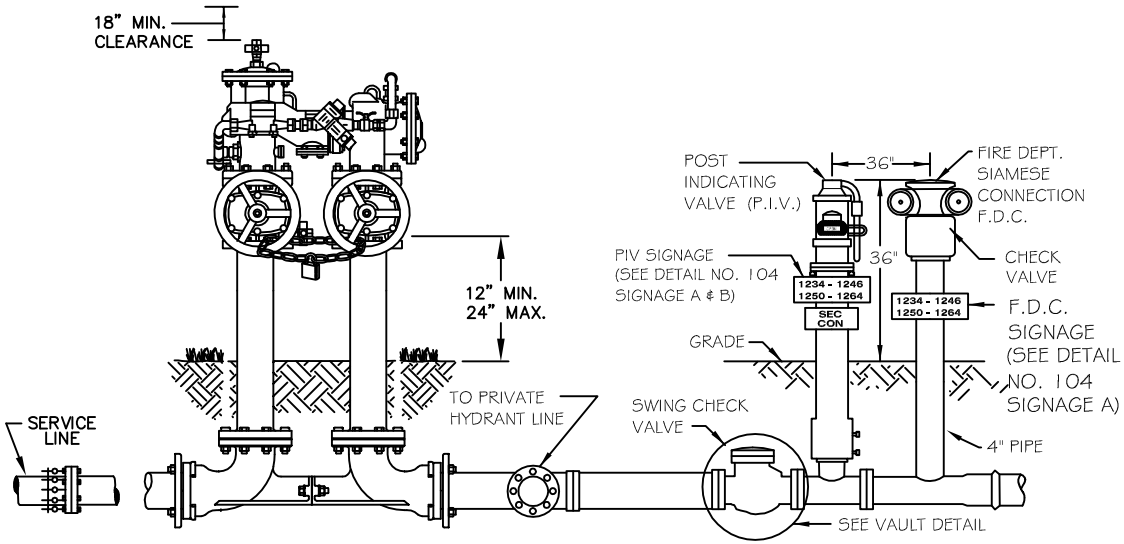

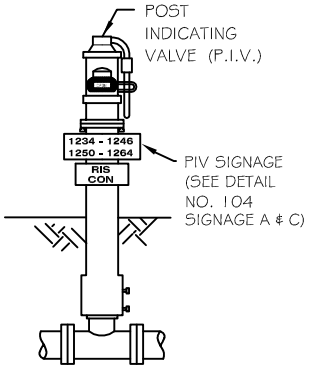

MULTIPLE RISER SYSTEMS, ADDITIONAL PIVS MAY BE REQUIRED AS RISER CONTROL VALVES.

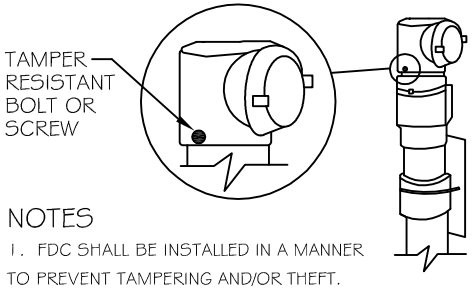

NOTES

1. FDC SHALL BE INSTALLED IN A MANNER TO PREVENT TAMPERING AND/OR THEFT.
2. PRIOR TO INSTALLING THE FDC ON THE CHECK VALVE, THREADLOCKER, OR EQUIVALENT, SHALL BE PLACED ON THE THREADS.
3. TAMPER RESISTANT BOLT OR SCREW SHALL BE INSTALLED IN THE BASE OF THE FDC BY DRILLING A 3/8 INCH HOLE THROUGH THE MANIFOLD CASE AND INNER THREADS.

NOTES:

1. ALL FD102 ☐ NOTES AND GENERAL NOTES SHALL APPLY TO FD 103 DESIGN. (EXCEPT GENERAL NOTE #4).
2. FDC'S SHALL BE LOCATED WITHIN 150 FEET OF A PUBLIC (YELLOW) FIRE HYDRANT.
3. SWING CHECK VALVES USED ON UNDERGROUND FIRE LINES SHALL BE INSTALLED WITHIN A VAULT IN ACCORDANCE WITH THIS DETAIL. THE CHECK VALVE AND VAULT ASSEMBLY SHALL BE INSTALLED AFTER THE PRIVATE HYDRANT LINE (PRIVATE HYDRANTS SHALL BE PAINTED YELLOW WITH A BLACK BONNET).
4. FIRE SPRINKLER LINES SHALL HAVE A SECTIONAL CONTROL PIV INSTALLED BETWEEN THE SWING CHECK VALVE AND THE FDC. A SECTIONAL CONTROL PIV SHALL BE INSTALLED AT MID POINT ON THE LOOPED FIRE LINE TO PROVIDE FOR ISOLATION OF THE FIRE LINE.
5. FIRE SPRINKLER LINES SHALL HAVE A RISER CONTROL PIV FOR EACH INDIVIDUAL RISER. THE PIV'S SHALL BE LOCATED AS CLOSE TO THE RISER AS PRACTICAL. THE RISER CONTROL PIV'S MAY BE ELIMINATED AND FD105 IS REQUIRED. PROVIDE A KEY BOX FOR FIRE DEPARTMENT ACCESS TO THE RISER CONTROL VALVES LOCATED INSIDE THE BUILDING.
6. ALL STUB OUT AND FUTURE DEVELOPMENT PADS (PHASED PROJECTS) SHALL END WITH A PIV PAINTED FOREST GREEN.

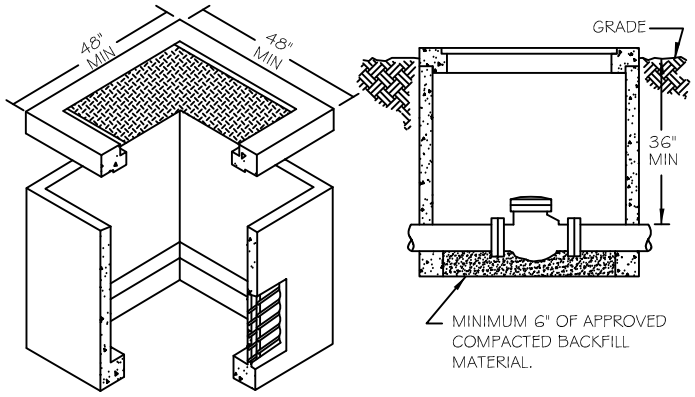

VAULT DETAIL

DETAIL NO.				DETAIL NO.
FD103 NTS	CITY OF CHANDLER STANDARD DETAIL	**FIRE LINE INSTALLATION** **ON-SITE HYDRANTS REQUIRED / FOR LARGE SITES AND/OR MULTIPLE BUILDINGS**	APPROVED: [signature] DATE: 4/04/2012	**FD103** NTS

SIGNAGE A

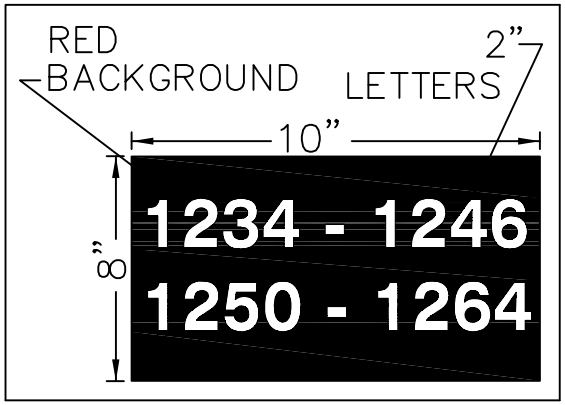

SIGNAGE B

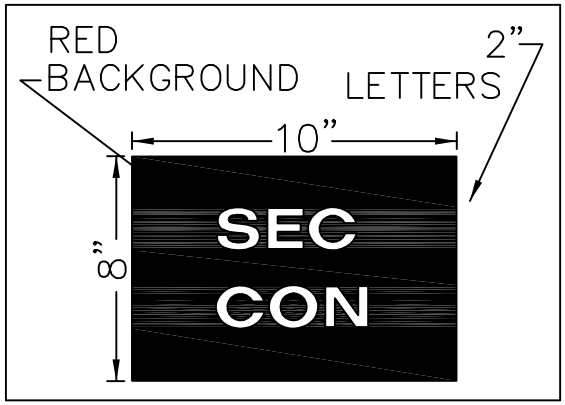

SIGNAGE C

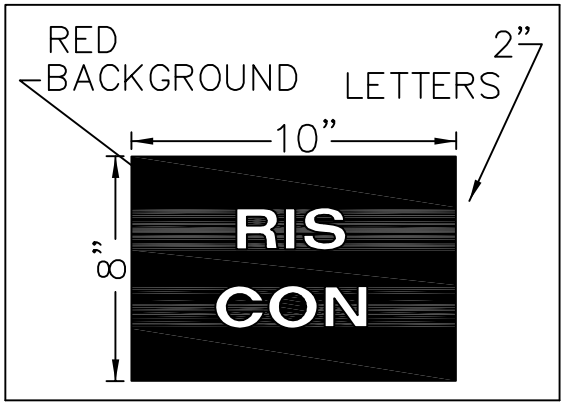

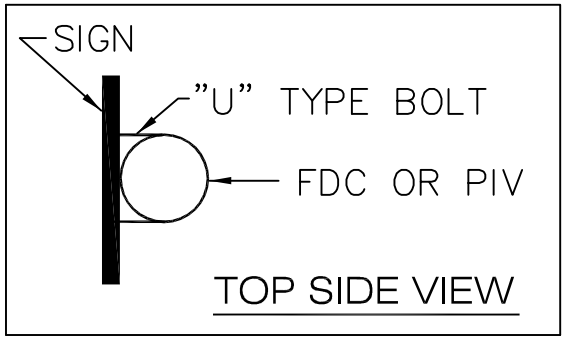

NOTES:

1. THE SIGNS SHALL INCLUDE THE ADDRESS(S) OF THE PREMISE(S) SERVING THE FDC OR PIV.
2. THE SIGNS SHALL BE RED IN COLOR WITH WHITE REFLECTIVE LETTERING AND SHALL BE 0.08 GAUGE ALUMINUM AND SHALL BE SECURELY ATTACHED TO THE FDC OR PIV WITH "U" TYPE BOLTS.

DETAIL NO. **FD104** NTS	CITY OF CHANDLER STANDARD DETAIL	**FIRE DEPT. CONNECTION AND POST INDICATING VALVE SIGNAGE**	APPROVED: FIRE MARSHAL DATE: 10/05/2010	DETAIL NO. **FD104** NTS

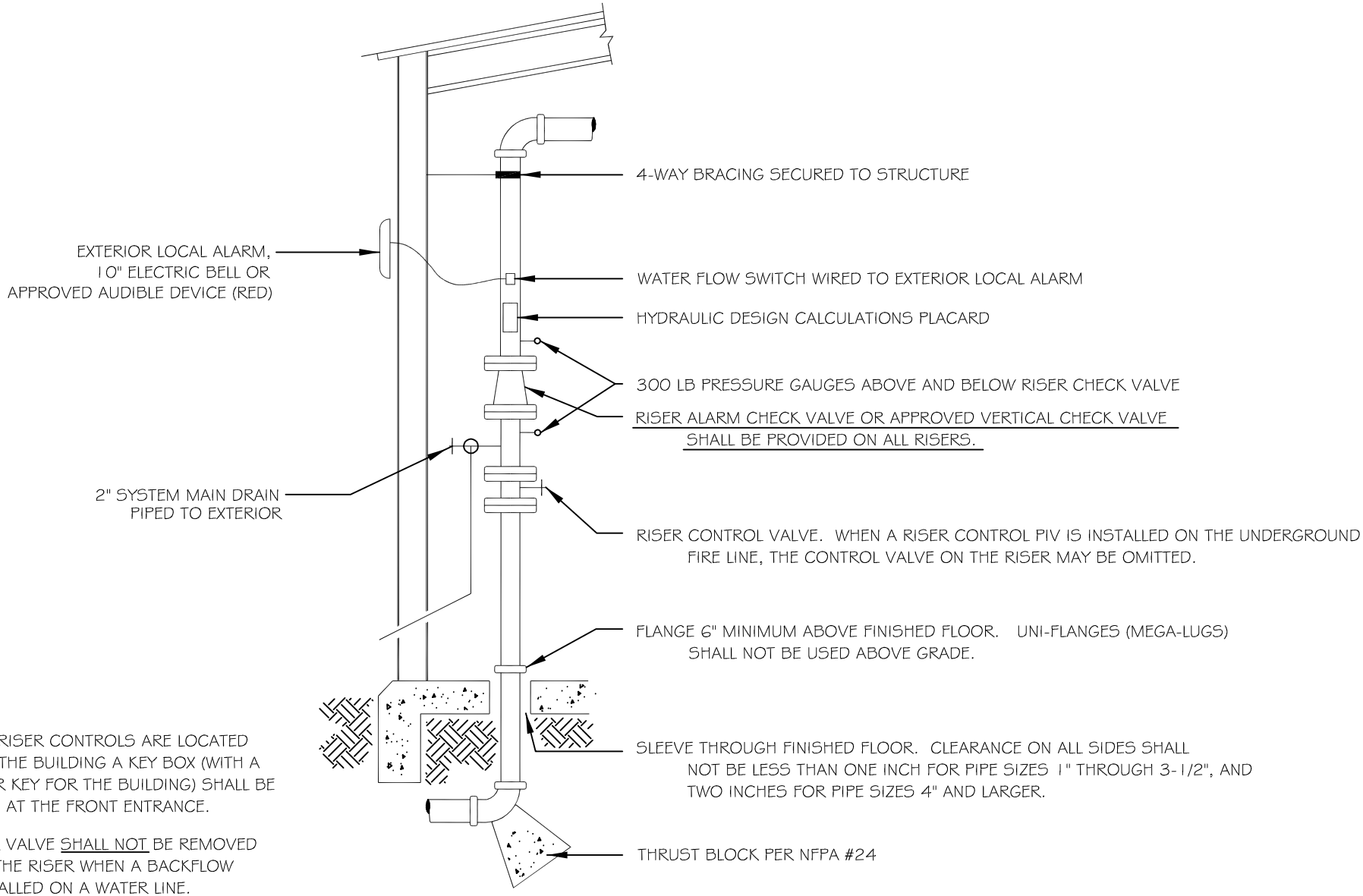

NOTE:

1. WHEN RISER CONTROLS ARE LOCATED INSIDE THE BUILDING A KEY BOX (WITH A MASTER KEY FOR THE BUILDING) SHALL BE PLACED AT THE FRONT ENTRANCE.
2. CHECK VALVE SHALL NOT BE REMOVED FROM THE RISER WHEN A BACKFLOW IS INSTALLED ON A WATER LINE.

DETAIL NO.				
FD105 NTS	CITY OF CHANDLER STANDARD DETAIL	**FIRE SPRINKLER SYSTEM RISER COMMERCIAL INSTALLATION**	APPROVED: FIRE MARSHAL DATE: 7/30/2010	**FD105** NTS

SIGNAGE A

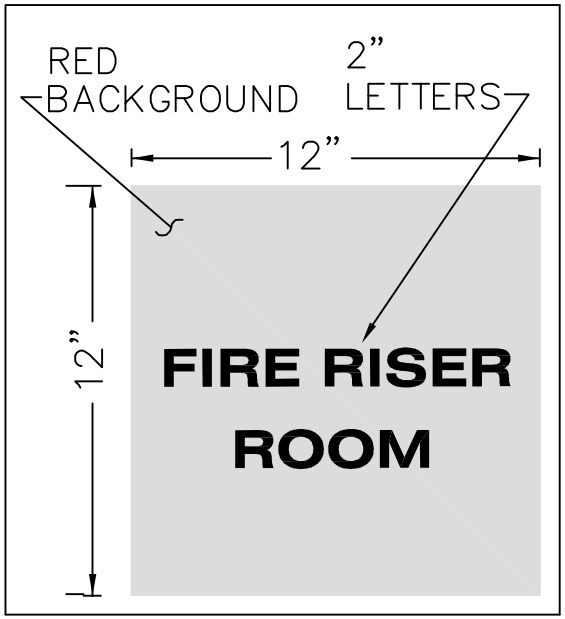

SIGNAGE B

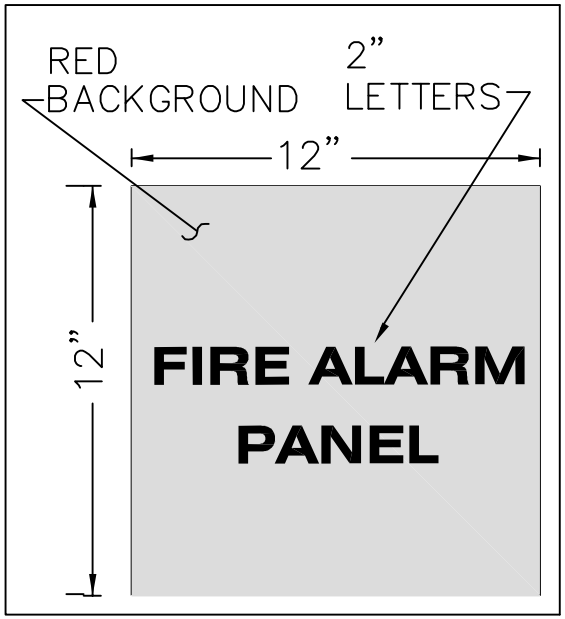

NOTES:

1. ALL SIGNS SHALL BE RED IN COLOR WITH WHITE REFLECTIVE LETTERING.
2. OUTSIDE SIGNS SHALL BE 0.08 GAUGE ALUMINUM OR EQUIVILANT, SECURED TO THE DOOR, OR THE SIGN MAY BE STENCILED ON THE DOOR. STENCILING SHALL BE RED BACKGROUND WITH WHITE REFLECTIVE LETTERING.
3. INSIDE SIGNS SHALL BE OF DURABLE MATERIAL.

DETAIL NO.				
FD106 NTS	CITY OF CHANDLER STANDARD DETAIL	**FIRE RISER ROOM AND FIRE ALARM PANEL SIGNAGE**	APPROVED: FIRE MARSHAL DATE: 10/05/2010	DETAIL NO. **FD106** NTS

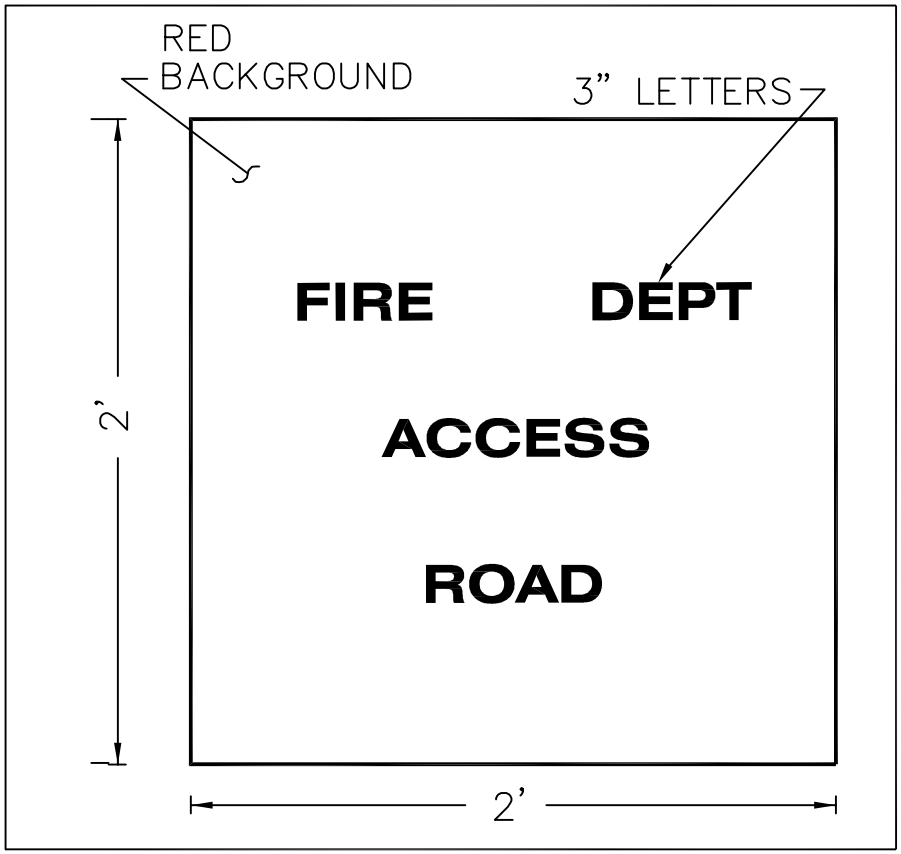

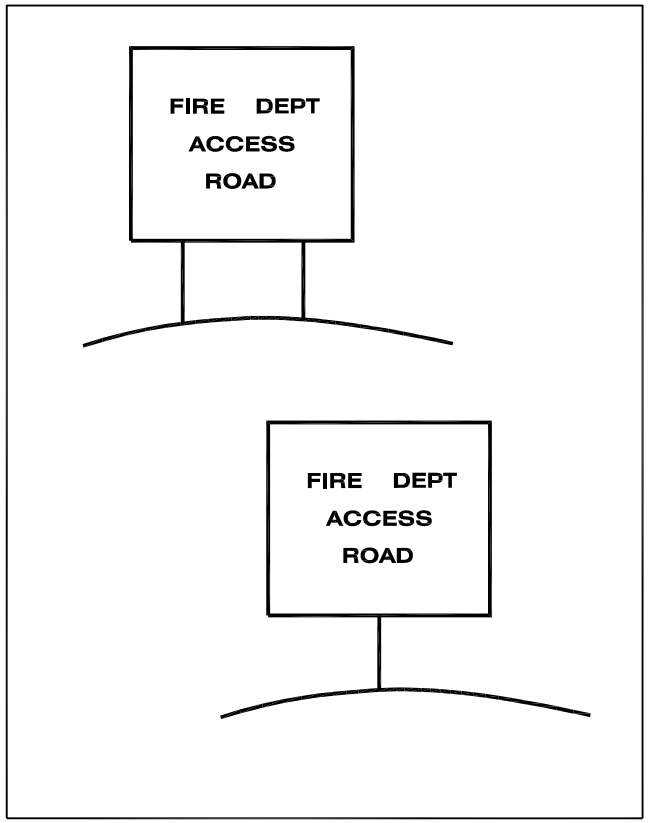

NOTES:

1. ALL SIGNS SHALL BE RED IN COLOR WITH WHITE REFLECTIVE LETTERING.
2. SIGNS SHALL BE POSTED AT ALL FIRE DEPT ACCESS POINTS TO THE SITE.
3. SIGNS SHALL BE MADE OF DURABLE OR ALL WEATHER MATERIALS.
4. SIGNS SHALL BE MOUNTED ON EITHER A SINGLE CENTER POST OR DOUBLE SIDE POST. POST MAY BE STEEL OR WOOD.
5. TOP OF SIGN SHALL BE 6-8 FEET FROM FINISH GRADE.
6. SIGNS SHALL BE POSTED WHEN TEMPORARY FIRE DEPARTMENT ACCESS ROADS ARE INSTALLED.
7. SIGNS SHALL BE REMOVED WHEN PERMANENT ROADS ARE COMPLETED.

DETAIL NO.					DETAIL NO.
FD107 NTS	CITY OF CHANDLER STANDARD DETAIL	**TEMPORARY FIRE DEPT ACCESS ROAD SIGNAGE**	APPROVED: FIRE MARSHAL DATE: 10/05/2010		**FD107** NTS

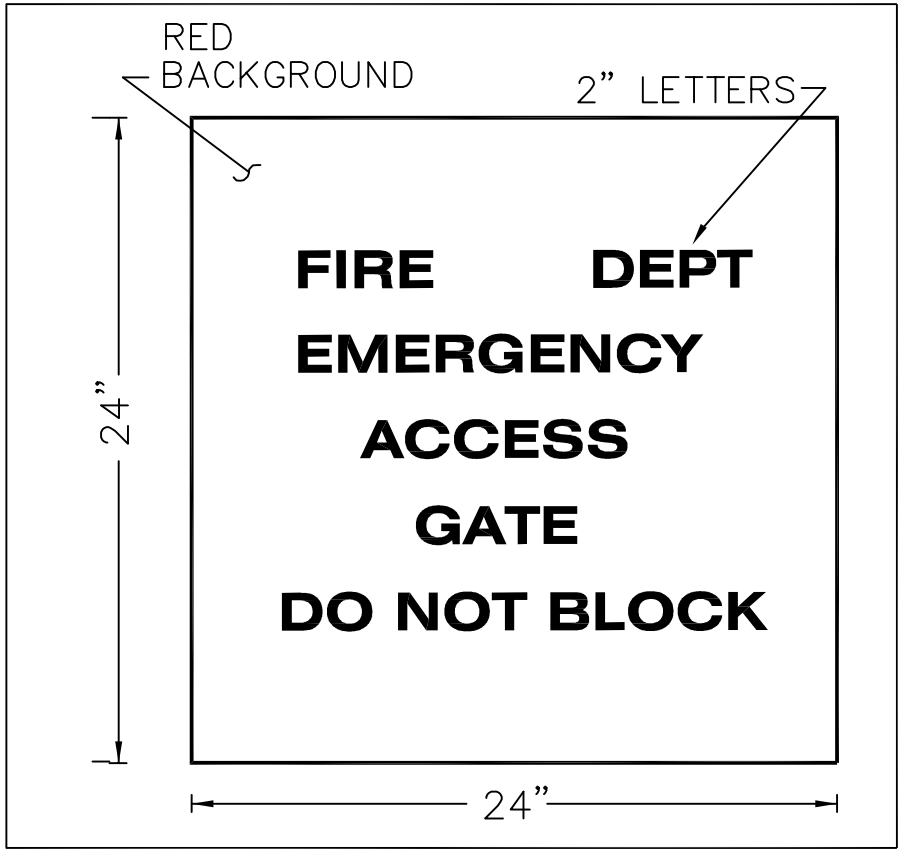

NOTES:

1. ALL SIGNS SHALL BE RED IN COLOR WITH WHITE REFLECTIVE LETTERING.
2. SIGNS SHALL BE POSTED AT ALL FIRE DEPT EMERGENCY GATE ACCESSES.
3. SIGNS SHALL BE MADE OF DURABLE OR ALL WEATHER MATERIALS.
4. SIGNS SHALL BE MOUNTED ON BOTH SIDES OF THE GATE.

DETAIL NO. **FD108** NTS	CITY OF CHANDLER STANDARD DETAIL	**TEMPORARY FIRE DEPT ACCESS ROAD SIGNAGE**	APPROVED: FIRE MARSHAL DATE: 10/05/2010	DETAIL NO. **FD108** NTS

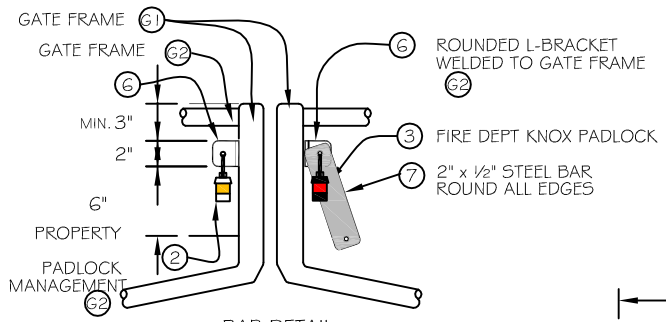

BAR DETAIL
UNLOCKED POSITION

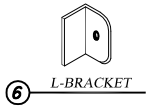

6 L-BRACKET

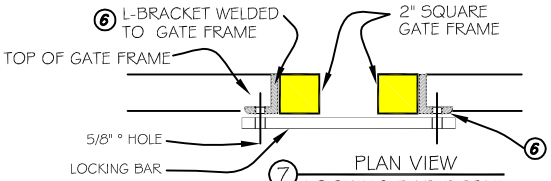

7 PLAN VIEW
LOCKING BAR DETAIL

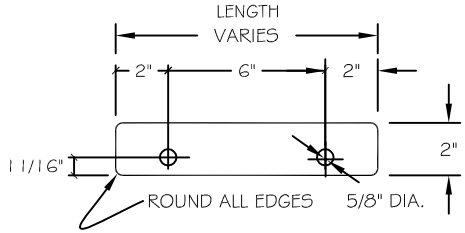

7 LOCKING BAR DETAIL

4 PLAN VIEW

GENERAL NOTES:

1. APPROVED SIGN, (2" LETTERS HELVETICA MEDIUM, 36" x 24"), RED BACKGROUND WITH WHITE REFLECTIVE LETTERING,TO IDENTIFY THE NAME OF THE COMPLEX AND THE LOCATION (ADDRESS). ¼" X 1½" MOUNTING STRAPS
2. PROPERTY OWNER/MANAGEMENT PADLOCK
3. KNOX PADLOCK SHALL BE ACCESSIBLE FROM BOTH SIDES OF GATE. (KNOX PADLOCK CAN BE PURCHASED AT www.knoxbox.com, enter "chandler" for the City.)
4. "FD EMERGENCY ACCESS DO NOT BLOCK" FD108 SIGNS (2" LETTERS, 24" x 24"), RED BACKGROUND WITH WHITE REFLECTIVE LETTERS, PLACED BACK TO BACK AND FASTENED ON ALL 4 CORNERS. ¼" X 1½" MOUNTING STRAPS
5. THE MINIMUM OVERALL WIDTH OF THE GATE OPENING SHALL BE 20 FT.
6. WELD MODIFIED L-BRACKET TO GATE FRAME OR POST. ROUND ALL EDGES. (TYPICAL 2 PLACES)
7. LOCKING BAR LENGTH IS DETERMINED BY THE FRAME WIDTH AND THE GAP WIDTH BETWEEN THE 2 GATES. REMOVE ALL SHARP EDGES / ROUND ALL CORNERS.
8. 24" DIAMETER CONCRETE POST FOOTINGS. (TYPICAL)
9. POSTS AND GATES SHALL BE PAINTED CHROME YELLOW.

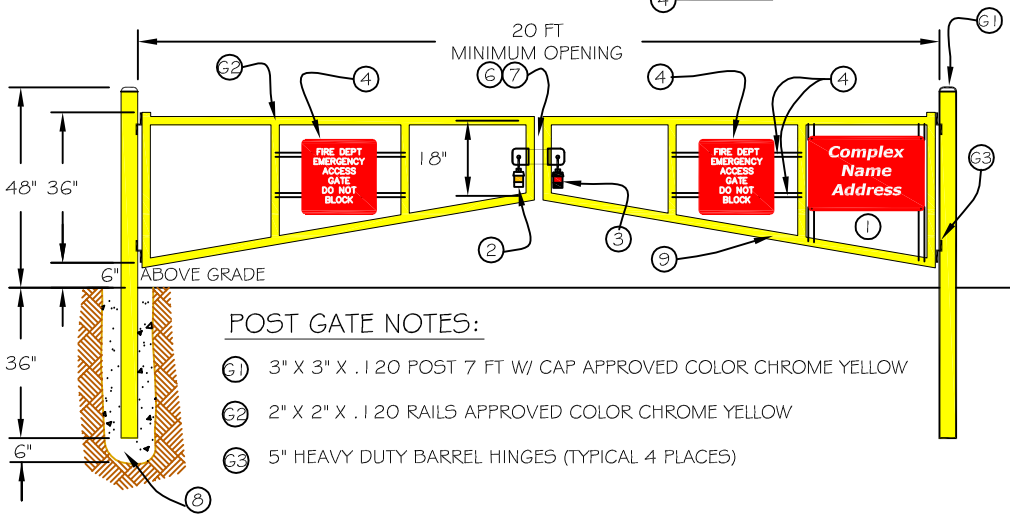

POST GATE NOTES:

G1 3" X 3" X .120 POST 7 FT W/ CAP APPROVED COLOR CHROME YELLOW

G2 2" X 2" X .120 RAILS APPROVED COLOR CHROME YELLOW

G3 5" HEAVY DUTY BARREL HINGES (TYPICAL 4 PLACES)

TYPE 'A' DOUBLE SWING GATE

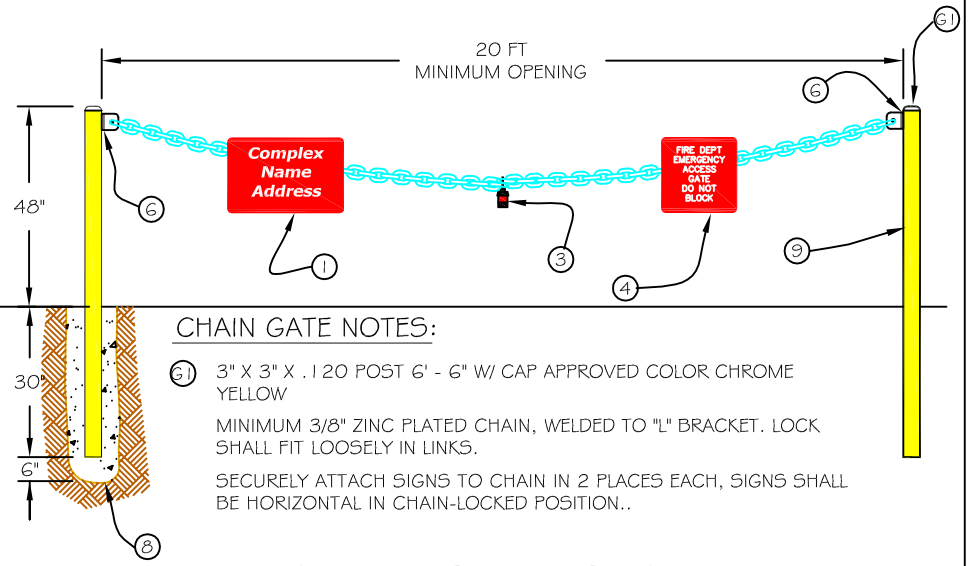

CHAIN GATE NOTES:

G1 3" X 3" X .120 POST 6' - 6" W/ CAP APPROVED COLOR CHROME YELLOW

MINIMUM 3/8" ZINC PLATED CHAIN, WELDED TO "L" BRACKET. LOCK SHALL FIT LOOSELY IN LINKS.

SECURELY ATTACH SIGNS TO CHAIN IN 2 PLACES EACH, SIGNS SHALL BE HORIZONTAL IN CHAIN-LOCKED POSITION..

TYPE 'B' CHAIN GATE

DETAIL NO.				DETAIL NO.
FD109 NTS	CITY OF CHANDLER STANDARD DETAIL	**EMERGENCY ACCESS BARRIER**	APPROVED: DATE: 9/24/2012	**FD109** NTS

MINIMUM ACCESSWAY WIDTH FOR FIRE LANE SIGN PLACEMENT

* WIDTH	PARKING CONDITIONS	SIGNS REQUIRED
LESS THAN 29'	NO PARKING ON EITHER SIDE OF STREET	THIS DETAIL
29' TO LESS THAN 35'	PARKING ON ONE SIDE OF STREET ONLY	ONE SIDE
35' OR MORE	PARKING ON BOTH SIDES OF STREET	NOT REQUIRED

* ROLLED CURBS SHALL BE MEASURED FROM BACK OF CURB TO BACK OF CURB.
* ALL OTHER CURBS SHALL BE MEASURED FROM FACE OF CURB TO FACE OF CURB.

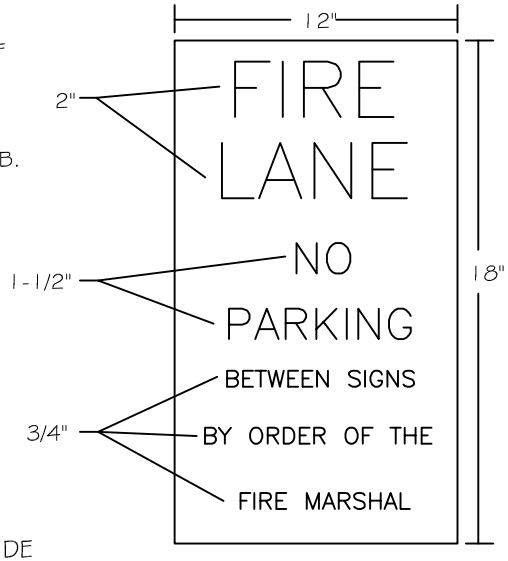

NOTES:

1. 2" LETTERS ARE 5/8" WIDE
2. 1-1/2" LETTERS ARE 1/2" WIDE
3. 3/4" LETTERS ARE 1/8" WIDE
4. ALL LETTERS ARE RED WITH A WHITE BACKGROUND
5. THE SIGNS ARE TO BE MOUNTED ON A POST AS PER DETAIL SHOWN.
6. THE BOTTOM OF THE SIGN IS TO BE 7' ABOVE GRADE AND NO MORE THAN 75' APART.
7. CURBING SHALL BE PAINTED BRILLIANT RED, UNLESS A WRITTEN VARIANCE IS PROVIDED TO THE FIRE MARSHAL FOR APPROVAL.
8. THESE SIGNS ARE NOT SUPPLIED BY THE CITY OF CHANDLER

FIRE LANE SIGN BASE

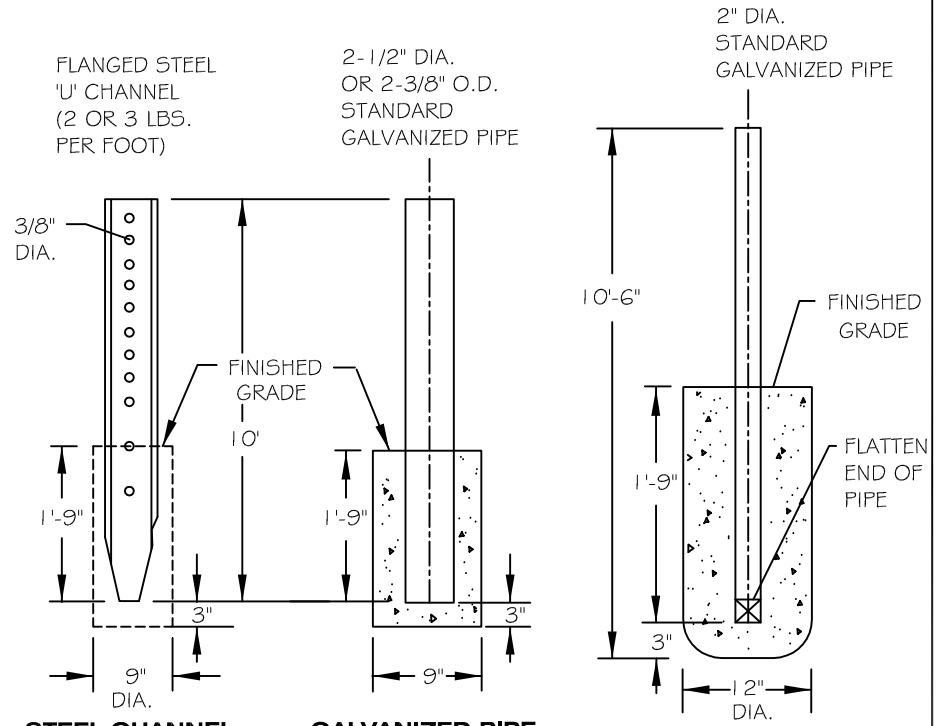

TYPE 'A': USE DRIVING HEAD FOR DRIVING ALL FLANGED STEEL 'U' CHANNEL POSTS. IN LIEU OF DRIVING, FLANGED STEEL 'U' CHANNEL POSTS MAY BE SET IN CONCRETE BASE FOUNDATION AS PER TYPE 'B' BASE.

TYPE 'B' & 'C': CONCRETE BASE FOUNDATIONS SHALL BE CLASS 'C' CONCRETE.

DETAIL NO.				
FD111 NTS	CITY OF CHANDLER STANDARD DETAIL	FIRE LANE SIGNAGE	APPROVED: FIRE MARSHAL DATE: 7/30/2010	DETAIL NO. FD111 NTS

MINIMUM STREET WIDTH FOR FIRE LANE SIGN PLACEMENT

* WIDTH	PARKING CONDITIONS	SIGNS REQUIRED
LESS THAN 29'	NO PARKING ON EITHER SIDE OF STREET	THIS DETAIL
29' TO LESS THAN 35'	PARKING ON ONE SIDE OF STREET ONLY	USE DETAIL 111
35' OR MORE	PARKING ON BOTH SIDES OF STREET	NOT REQUIRED

* ROLLED CURBS SHALL BE MEASURED FROM BACK OF CURB TO BACK OF CURB.
* ALL OTHER CURBS SHALL BE MEASURED FROM FACE OF CURB TO FACE OF CURB.

NOTES:

1. THIS SIGN MAY BE USED FOR PRIVATE STREET AND SUBDIVISIONS IN LIEU OF FIRE LANE SIGNS BEING POSTED EVERY 75' AND PAINTED CURBS.
2. 3 INCH LETTERS ARE 5/8 INCH WIDE
3. 2-1/2 INCH LETTERS ARE 1/2 INCH WIDE
4. 1 INCH LETTERS ARE 1/8 INCH WIDE
5. ALL LETTERS ARE RED WITH A WHITE BACKGROUND
6. SIGNS SHALL BE MOUNTED ON EITHER A SINGLE CENTER POST OR DOUBLE SIDE POSTS. POSTS MAY BE STEEL OR WOOD.
7. SIGNS SHALL HAVE A MINIMUM DIMENSION OF 24 INCHES BY 18 INCHES HIGH.
8. THE BOTTOM OF THE SIGN IS TO BE 3 FEET ABOVE GRADE SIGNS AND POSTS ARE NOT SUPPLIED BY THE CITY OF CHANDLER.
9. ALL SIGNS SHALL BE VISIBLE UPON ENTERING THE PRIVATE STREET.
10. ALL SIGNS SHALL BE MAINTAINED, SO THEY ARE LEGIBLE.

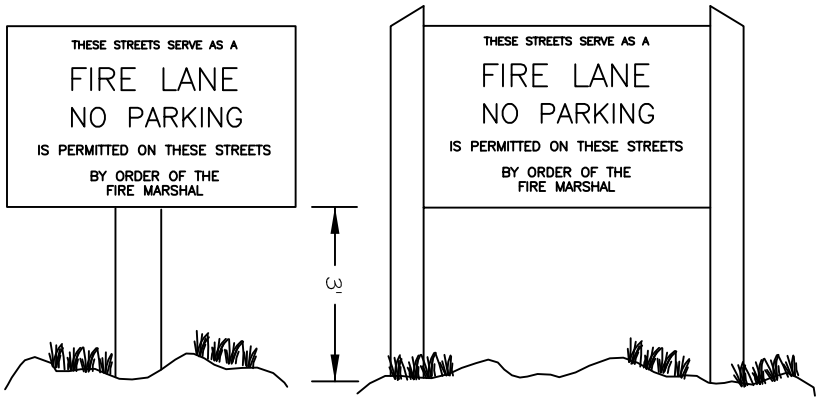

DETAIL NO.				
FD112 NTS	CITY OF CHANDLER STANDARD DETAIL	**FIRE LANE SIGNAGE (PRIVATE STREETS AND SUBDIVISIONS)**	APPROVED: FIRE MARSHAL DATE: 7/28/2011	DETAIL NO. **FD112** NTS

PERSONNEL ENTRY/EXIT DOOR

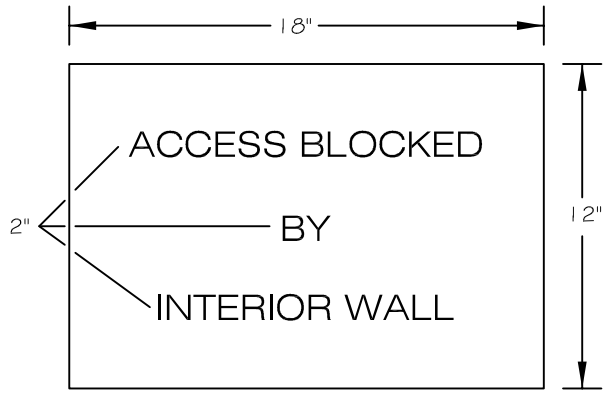

NOTES:

1. LETTERS SHALL BE 2" IN HEIGHT.
2. LETTERING SHALL BE WHITE REFLECTIVE WITH A RED BACKGROUND.
3. SIGNS SHALL BE 0.08 GAUGE ALUMINUM.
4. SIGNS SHALL BE SECURED TO THE DOOR IN A PERMANENT FASHION. NO GLUE.
5. TOP OF SIGN SHALL BE 6' ABOVE FINISHED GRADE.

OVERHEAD GARAGE DOOR

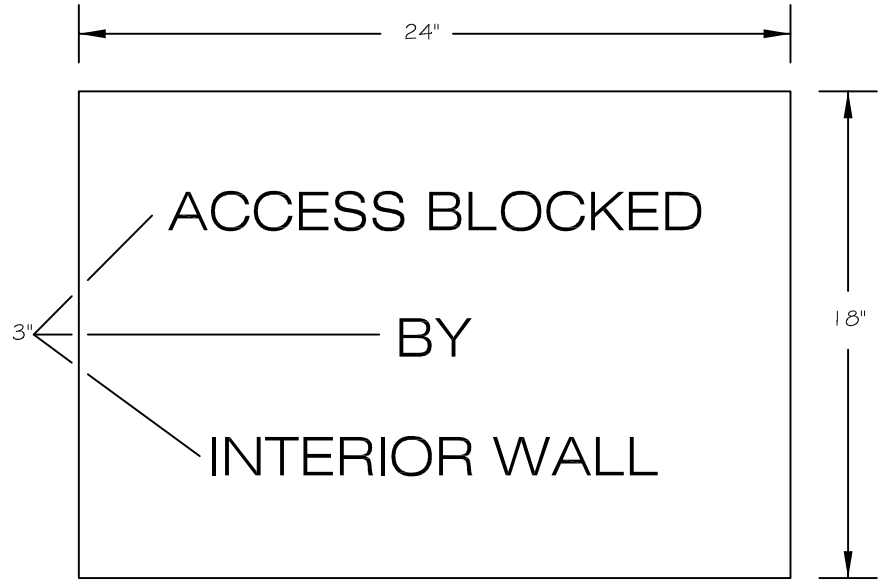

NOTES:

1. LETTERS SHALL BE 3" IN HEIGHT.
2. LETTERING SHALL BE WHITE REFLECTIVE WITH A RED BACKGROUND.
3. SIGNS SHALL BE 0.08 GAUGE ALUMINUM.
4. SIGNS SHALL BE SECURED TO THE DOOR IN A PERMANENT FASHION. NO GLUE.
5. TOP OF SIGN SHALL BE 6' ABOVE FINISHED GRADE.

DETAIL NO.					DETAIL NO.
FD115 NTS	CITY OF CHANDLER STANDARD DETAIL	**BLOCKED DOOR SIGNAGE (INTERIOR WALL)**	APPROVED: FIRE MARSHAL	DATE: 10/05/2010	**FD115** NTS

COLOR CODE

THE CITY OF CHANDLER WATER DIVISION AND FIRE DEPARTMENT UTILIZE THE FOLLOWING COLOR CODE IN DISTINGUISHING THE VARIOUS TYPES OF FIRE HYDRANTS:

1. CAT YELLOW: THE BARREL AND BONNET OF ALL FIRE HYDRANTS INSTALLED ON PUBLIC WATER MAINS IN RIGHTS-OF-WAY AND IN PUBLIC UTILITY EASEMENTS (PUE'S) SHALL BE PAINTED CAT YELLOW.
2. GLOSS BLACK/CAT YELLOW: THE BONNET OF ALL FIRE HYDRANTS INSTALLED ON PRIVATELY OWNED AND MAINTAINED WATER MAINS SHALL BE PAINTED GLOSS BLACK. THE BARREL SHALL BE PAINTED CAT YELLOW.
3. BRILLIANT RED: THE BARREL AND BONNET OF ALL FIRE HYDRANTS INSTALLED ON PRIVATE FIRE LINES SHALL BE PAINTED BRILLIANT RED IF THOSE FIRE HYDRANTS ARE SERVED BY FIRE PUMPS OR FIRE DEPARTMENT SIAMESE CONNECTIONS (FDC'S). ALL SUCH FIRE HYDRANTS SHALL BE ISOLATED FROM THE MUNICIPAL WATER SYSTEM BY DOUBLE DETECTOR CHECK VALVES. ALL RED HYDRANTS SHALL BE APPROVED BY THE FIRE MARSHAL.

NOTE:
1. ON WATEROUS HYDRANTS ONLY: BONNET (A) WILL BE PAINTED 3" DOWN FROM THE TOP.

LEGEND:
1. (A) = BONNET (B) = BARREL
2. TYPE DENOTES COLOR CODE DESIGNATION.
(CY) = CAT YELLOW (BR) = BRILLIANT RED
(GB) = GLOSS BLACK

TYPE	A	B
1	CY	CY
2	GB	CY
3	BR	BR

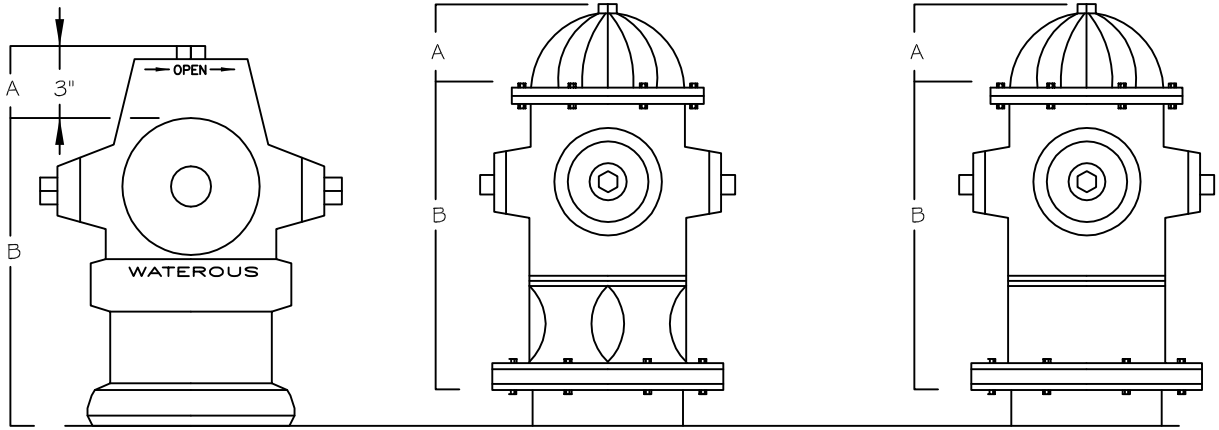

WATEROUS **MUELLER** **CLOW**

DETAIL NO.				DETAIL NO.
FD121 NTS	CITY OF CHANDLER STANDARD DETAIL	**HYDRANT IDENTIFICATION AND COLOR CODING**	APPROVED: FIRE MARSHAL DATE: 7/28/2011	**FD121** NTS

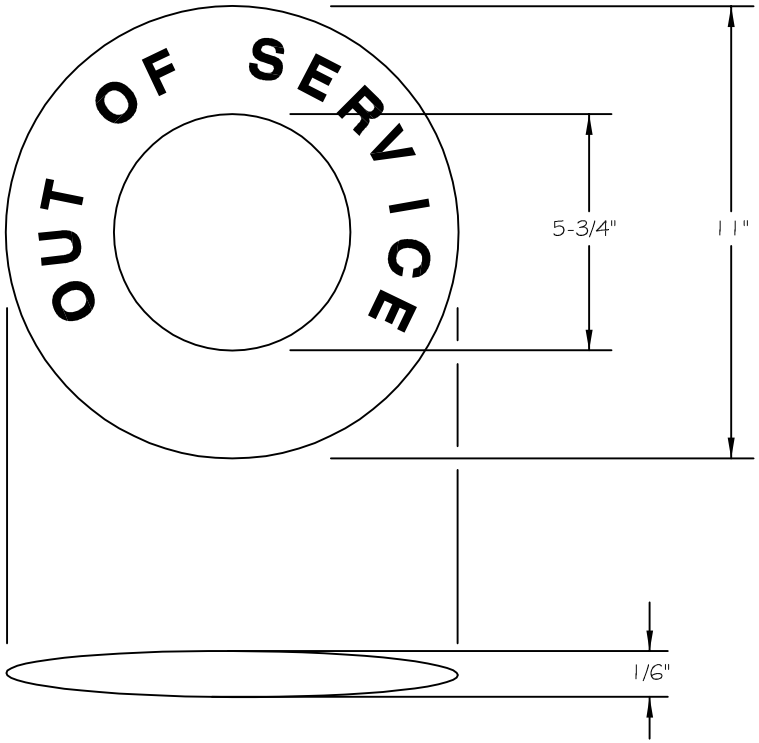

NOTE:

ALL FIRE HYDRANTS INSTALLED ON PRIVATE AND PUBLIC WATER LINES SHALL BE PROVIDED WITH "OUT OF SERVICE" SIGNS. UPON COMPLETION OF REQUIRED INSPECTIONS, TESTS, ACCEPTANCE, AND APPROVAL OF THE WATER SYSTEM BY A C.O.C. INSPECTOR AND THE SYSTEM IS VERIFIED TO BE IN SERVICE, THE "OUT OF SERVICE" SIGNS SHALL BE REMOVED. A HYDRANT REMOVED FROM SERVICE SHALL BE PROVIDED AN "OUT OF SERVICE" SIGN WITHIN THE INITIAL 2 HOURS OF THE SERVICE INTERRUPTION. SIGNS SHALL BE IN ACCORDANCE WITH THIS DETAIL. SIGNS SHALL BE PERMANENTLY MARKED AND CONSTRUCTED OF WEATHERPROOF METAL OR RIGID PLASTIC MATERIAL. THE COLOR OF LETTERING ON SIGNS SHALL BE IN HIGH CONTRAST WITH THEIR BACKGROUND. SIGNS SHALL HAVE THE WORDS "OUT OF SERVICE" ON THE SIGN IN BLOCK CAPITAL LETTERS NOT LESS THAN 1-1/2" IN HEIGHT WITH A STROKE OF NOT LESS THAN 1/4".

DETAIL NO.				DETAIL NO.
FD123 NTS	CITY OF CHANDLER STANDARD DETAIL	**'OUT OF SERVICE' SIGNS**	APPROVED: FIRE MARSHAL DATE: 7/27/2011	**FD123** NTS

UNAUTHORIZED PERSONNEL SHUTTING OFF WATER VALVES AND FIRE HYDRANTS ARE IN VIOLATION OF CITY OF CHANDLER CODE. CONTACT WATER DISTRIBUTION 48 HOURS PRIOR TO SCHEDULE ALL SHUT DOWNS - (480) 782-3700 MONDAY-FRIDAY 8:00AM-5:00PM.

APAGAR LAS VALVULAS DE AGUA O LAS BOCAS DE INCENDIOS A PERSONAL NO AUTORIZADO ESTAN VIOLANDO EL CODIGO DEL LA CIUDAD DE CHANDLER. CONTRACTAR DISTRIBUCIÓN DE AGUA 48 HORAS ANTES PARA PROGRAMAR TODOS LOS CIERRES. (480) 782-3700 DE LUNES A VIERNES 8:00AM-5:00PM.

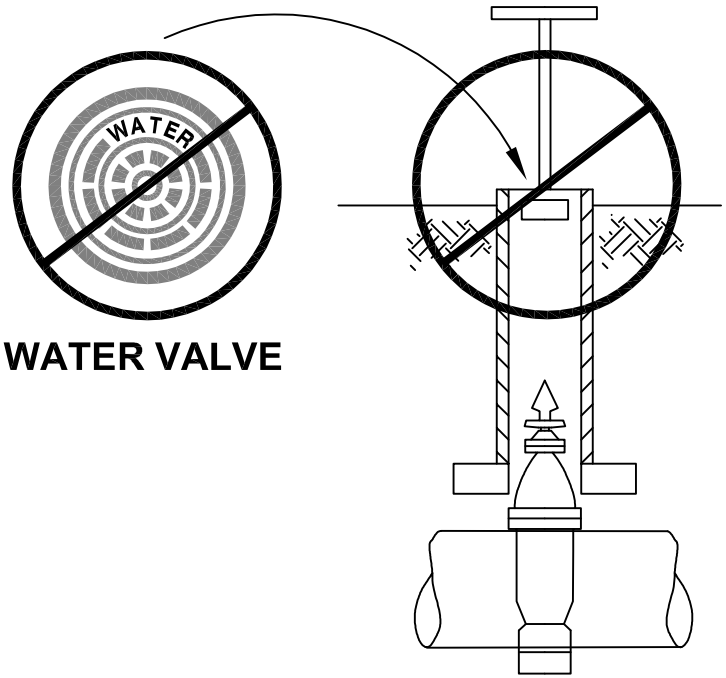

WATER VALVE

SIGNATURE: _____ **DATE:** _____

THIS IS TO BE POSTED IN THE CONSTRUCTION OFFICE

DETAIL NO.					DETAIL NO.
FD124 NTS	CITY OF CHANDLER STANDARD DETAIL	**UNAUTHORIZED WATER VALVE SHUT OFF**	APPROVED: FIRE MARSHAL DATE: 7/30/2010		**FD124** NTS

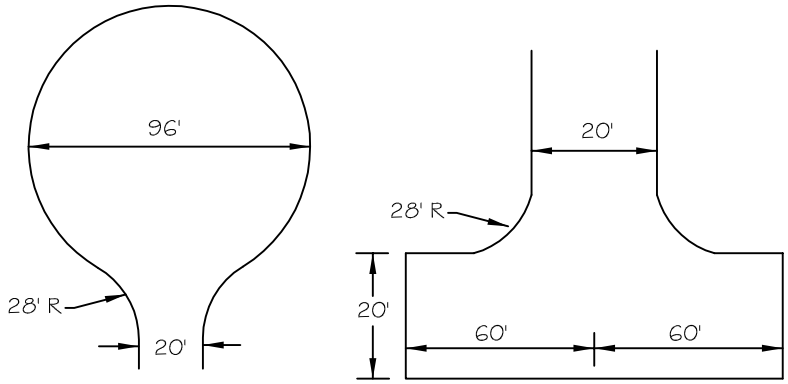

TURNAROUNDS: ALL DEAD-END FIRE APPARATUS ACCESS IN EXCESS OF 150 FEET IN LENGTH SHALL BE PROVIDED WITH APPROVED APPARATUS TURNAROUNDS.

SURFACE: FIRE APPARATUS ACCESS SHALL BE DESIGNED AS PER COC ROADWAY STANDARDS.

HEIGHT: UNOBSTRUCTED VERTICAL CLEARANCE SHALL BE NOT LESS THAN 13 FEET 6 INCHES.

WIDTH: UNOBSTRUCTED WIDTH OF ROAD SHALL NOT BE LESS THAN 20 FEET.

PERMANENT

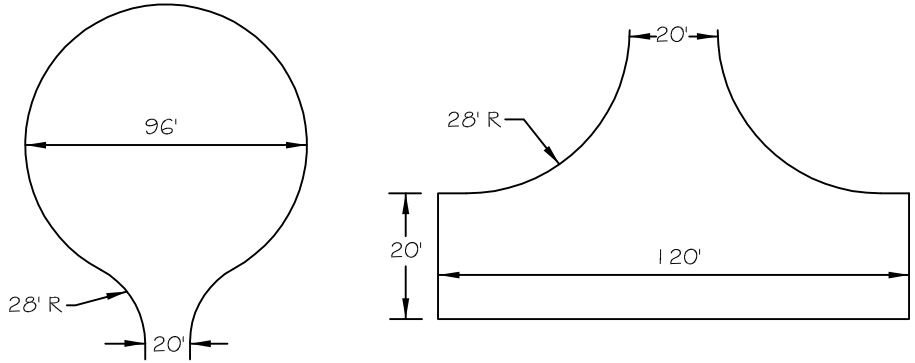

DETAIL A

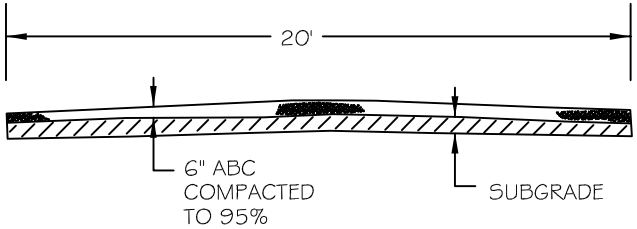

DETAIL B

NOTES:

1. TEMPORARY ACCESS SHALL BE IN ACCORDANCE WITH THE FIRE CODE.
2. ACCESS SHALL BE CONSTRUCTED AS PER DETAIL B ABOVE AND FIRE APPARATUS TURNAROUNDS SHALL BE IN ACCORDANCE WITH EITHER EXAMPLE IN DETAIL A ABOVE WHEN THE ACCESS IS IN EXCESS OF 150 FEET.
3. FIRE APPARATUS ACCESS SHALL BE DESIGNED AND MAINTAINED TO SUPPORT THE IMPOSED LOADS OF FIRE APPARATUS (75,000 LBS MIN.) AND SHALL BE PROVIDED WITH A SURFACE SO AS TO PROVIDE ALL WEATHER DRIVING CAPABILITIES.

TEMPORARY

(CONSTRUCTION SITES ONLY)

DETAIL NO.					DETAIL NO.
FD141 NTS	CITY OF CHANDLER STANDARD DETAIL	**FIRE APPARATUS ROADWAYS AND TURNAROUNDS FOR COMMERCIAL/INDUSTRIAL SITES**	APPROVED: FIRE MARSHAL DATE: 6/20/2011		**FD141** NTS

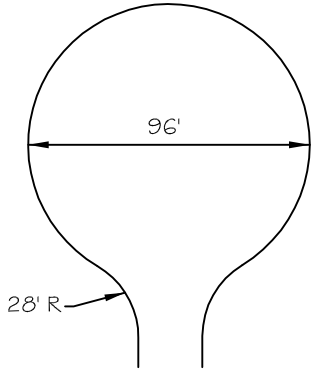

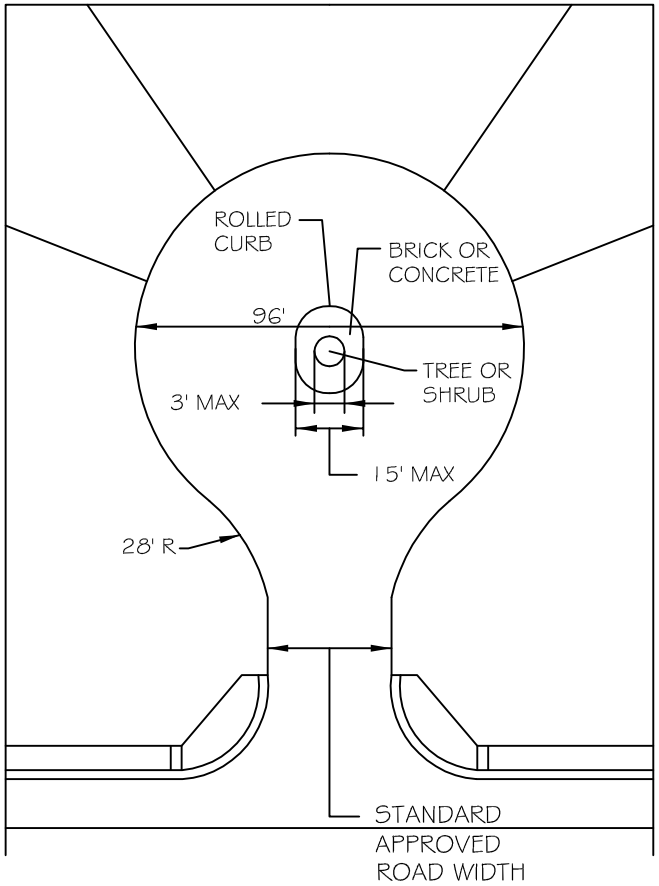

LANDSCAPE IN CUL-DE-SAC

TURNAROUNDS: ALL DEAD-END FIRE APPARATUS ACCESS ROADS IN EXCESS OF 150 FEET IN LENGTH SHALL BE PROVIDED WITH APPROVED APPARATUS TURNAROUND.

SURFACE: FIRE APPARATUS ACCESS ROADS SHALL BE DESIGNED AS PER COC ROADWAY STANDARDS.

HEIGHT: UNOBSTRUCTED VERTICAL CLEARANCE SHALL BE NOT LESS THAN 13 FEET 6 INCHES.

WIDTH: UNOBSTRUCTED WIDTH SHALL NOT BE LESS THAN STANDARD APPROVED ROAD WIDTH.

DETAIL NO.				
FD143 NTS	CITY OF CHANDLER STANDARD DETAIL	**FIRE APPARATUS ROADWAYS AND TURNAROUNDS PRIVATE RESIDENTIAL CUL-DE-SAC**	APPROVED: FIRE MARSHAL DATE: 6/20/2011	DETAIL NO. **FD143** NTS

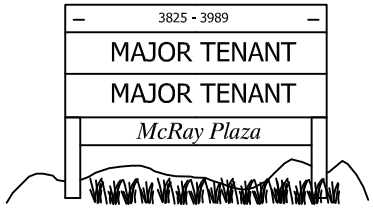

THE ADDRESS NUMBERS SHALL BE POSTED ON THE TOP CENTER IDENTIFICATION SIGN AT MAIN ENTRANCE OF COMMERCIAL MALL, CENTER, VILLAGE, OR SQUARE, SO AS TO BE VISIBLE FROM A NORTH-SOUTH OR EAST-WEST DIRECTION.

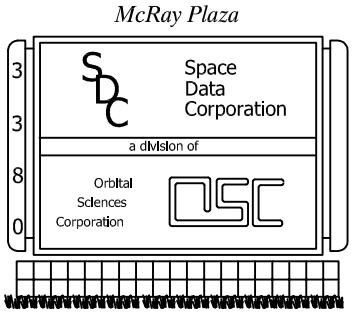

PERMANENT FIXTURE WITH THE SITUS ADDRESS SHALL BE PLACED IN A CONSPICUOUS LOCATION IF NOT VIEWABLE FROM THOROUGHFARE FRONTAGE SO AS TO BE VISIBLE FROM A NORTH-SOUTH OR EAST-WEST DIRECTION.

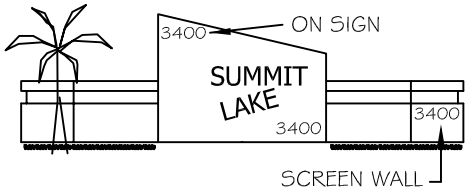

ADDRESS SHALL BE DISPLAYED ON THE TOP PORTION OF THE COMPLEX IDENTIFICATION SIGN OR ON THE TOP PORTION OF THE SCREEN WALL AT THE MAIN ENTRANCE SO AS TO BE VISIBLE FROM A NORTH-SOUTH OR EAST-WEST DIRECTION

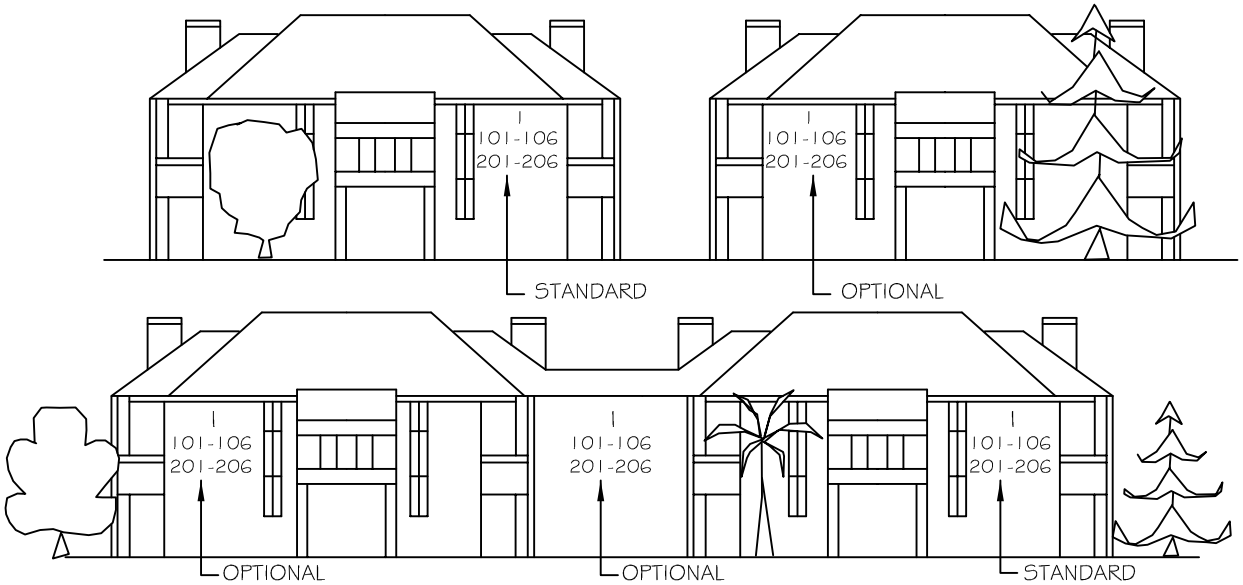

BUILDING IDENTIFICATION NUMBERS AND INTERVAL OF SUB-STRUCTURE SUFFIXES ASSIGNED TO INDIVIDUAL UNITS SHALL BE DISPLAYED IN THE UPPER, RIGHT HAND CORNER AT THE END OF EACH BUILDING SO AS TO BE PLAINLY VISIBLE FROM THE ACCESS THOROUGHFARE. ALPHA CHARACTERS MAY BE ASSIGNED FOR BUILDING IDENTIFICATION FOR MULTI FAMILY DEVELOPMENTS WHERE SINGLE DIGIT SUB-STRUCTURE SUFFIXES ARE USED. MULTI FAMILY DEVELOPMENTS WITH INTERNAL DRIVES, BUILDING LETTER/NUMBER AND RANGE OF SUB-STRUCTURE SUFFIXES SHALL BE POSTED ON EACH SIDE OF BUILDING SO AS TO BE CLEARLY VISIBLE FROM ALL ACCESS DRIVES AND THOROUGHFARES. ** EXCEPTION: INTERVAL OF SUB-STRUCTURE SUFFIXES MAY BE DISPLAYED ELSEWHERE ON BUILDING DUE TO REQUIRED LANDSCAPING, SUBJECT TO APPROVAL OF THE STREET NAMING AND ADDRESSING COORDINATOR. COLOR OF NUMBERS/LETTERS AND BACKGROUND SHALL CONTRAST AND CONFORM TO REQUIREMENTS FOR HELVETICA MEDIUM NUMBERING/LETTERING DISTANCE AT WHICH LETTERS/NUMBERS SHALL BE LEGIBLE FROM CENTER OF THOROUGHFARE:

0-50' 4" - APPLIES TO SINGLE FAMILY RESIDENTIAL, MULTI-FAMILY, COMMERCIAL MALLS, CENTERS, OR VILLAGES.
50-200' 10" - INTERVAL OF LOW-HIGH SUB-STRUCTURES SUFFIXES FOR MULTI-FAMILY DEVELOPMENTS MAY BE A MINIMUM OF 6"-8" IN HEIGHT. INTERVAL OF LOW-HIGH SITUS ADDRESSES ON CENTER IDENTIFICATION SIGN MAY BE A MINIMUM OF 8" IN HEIGHT.
201-300' - 12"
301-400' - 14"

FOR COMMERCIAL MALLS, CENTERS, VILLAGES AND SQUARES, DISTANCE TO BE MEASURED FROM CENTER OF ACCESS DRIVE TO STRUCTURE(S).

NOTES:

1. THERE SHALL BE NO LANDSCAPING THAT COVERS OR HINDERS THE VIEW OF THE MONUMENT SIGN OR SCREEN WALL FROM THE ROADWAY.
2. ALL SUITES SHALL HAVE THE ADDRESS AND SUITE NUMBER ON BOTH THE FRONT AND BACK DOOR(S).

DETAIL NO.					DETAIL NO.
FD151 NTS	CITY OF CHANDLER STANDARD DETAIL	**ADDRESS IDENTIFICATION**	APPROVED: FIRE MARSHAL	DATE: 7/30/2010	**FD151** NTS