STANDARD DETAILS
AND
SPECIFICATIONS

Chandler • Arizona

February 2012

Table of Contents

321 ASPHALT CONCRETE PAVEMENT 2

334 PRESERVATIVE SEAL FOR ASPHALT CONCRETE 3

336 PAVEMENT MATCHING AND SURFACING REPLACEMENT 4

340 CONCRETE CURB, GUTTER, SIDEWALK, SIDEWALK RAMPS, DRIVEWAY, AND ALLEY ENTRANCE 5

360 TELECOMMUNICATIONS INSTALLATION 6

401 TRAFFIC CONTROL 7

450* GUIDED BORE CONSTRUCTION (NEW SECTION) 8

601 TRENCH EXCAVATION, BACKFILLING, AND COMPACTION 10

610 WATERLINE CONSTRUCTION 11

615 SEWER LINE CONSTRUCTION 14

616 RECLAIMED WATERLINE CONSTRUCTION 15

618 STORM DRAIN CONSTRUCTION 16

625 MANHOLE CONSTRUCTION AND DROP SEWER CONNECTIONS 17

630 TAPPING SLEEVES, VALVES AND VALVE BOXES ON WATERLINES 18

718 PRESERVATIVE SEAL FOR ASPHALTIC CONCRETE 19

739* POLYPROPYLENE PIPE & FITTINGS FOR STORM DRAIN AND SANITARY SEWER (NEW SECTION) .. 21

751* POLYVINYL CHLORIDE (PVC) PRESSURE PIPE (NEW SECTION) 22

756 DRY BARREL FIRE HYDRANTS 25

SECTION 321

ASPHALT CONCRETE PAVEMENT

321.8 PLACEMENT is changed to add:

321.8.6 Preservative Seal A surface treatment per Section 334 shall be required on streets other than arterial. The surface treatment shall be Tire Rubber Modified Surface Seal (TRMSS) and shall be applied immediately prior to the end of the construction warranty period.

SECTION 334

PRESERVATIVE SEAL FOR ASPHALT CONCRETE

334.1 GENERAL is changed to read:

The asphalt concrete preservative seal shall be composed of a penetrating softening agent and sealant to rejuvenate and preserve, or a Tire Rubber Modified Surface Seal (TRMSS) to preserve, the asphalt concrete pavement.

334.3 CONSTRUCTION METHOD is changed to read:

All application rates specified in Section 718 shall be diluted 50:50 preservative and water, except as recommended by the manufacturer for Type D and E.

SECTION 336

PAVEMENT MATCHING AND SURFACING REPLACEMENT

336.1 DESCRIPTION: is changed to read:

Asphalt concrete pavement replacement shall be constructed in accordance with Type 'A' 'T-Top' of Detail 200, with a minimum shelf depth of 16 inches, as indicated on the plans, and as required by Sections 321 and 710.

Asphalt concrete shall be EVAC mix.

This item shall include the installation of pavement marking and reflective pavement markers to restore the surface to the condition prior to construction.

336.5 PAYMENT: is changed to add:

There will be no additional payment for the installation of pavement marking and reflective pavement markers.

SECTION 340

CONCRETE CURB, GUTTER, SIDEWALK, SIDEWALK RAMPS, DRIVEWAY, AND ALLEY ENTRANCE

340.2.1 Detectable Warnings is changed to add:

Refer to the *List of Approved Products* for approved detectable warning systems.

340.3 CONSTRUCTION METHODS is changed:

The last sentence of the second paragraph of this section shall read:

The subgrade shall then be compacted to relative density of 80% minimum to 90% maximum at a moisture content within 3% of optimum.

SECTION 360

TELECOMMUNICATIONS INSTALLATION

360.3 CABLE INSTALLATION:

(A) Trunk Lines (2), Second Sentence is changed to read:

The cable shall be placed within a steel casing at a minimum depth of 48 inches.

(B) Telecommunications cables other than "trunk lines" depth of placement is changed according to the following schedule:

Location	Depth of Placement
Arterial Street	48 Inches
Collector Street or Industrial Area	36 Inches
All Others	36 Inches

SECTION 401

TRAFFIC CONTROL

401.4 TRAFFIC CONTROL MEASURES is changed to add:

At areas where striping obliteration has occurred, the roadway surface shall be sealed with a slurry seal product approved by the City. Refer to the *List of Approved Products*. The product shall be thoroughly mixed with #30 mesh sand conforming to Section 701 at a rate of two pounds per gallon prior to application. Application shall be made on the area of striping obliteration by means of a squeegee.

Striping obliteration by grinding is not permitted.

SECTION 450

GUIDED BORE CONSTRUCTION

450.1 DESCRIPTION:

This work shall consist of installing a conduit by guided bore.

450.2 CONSTRUCTION:

Prior to construction, the contractor shall submit for approval a location plan and profile of the work in accordance with COC Detail C-112.

Only approved slurry boring methods shall be allowed. Water jetting shall not be substituted for slurry boring. All pneumatic boring shall be at a minimum depth of 36 inches below pavement surface.

Uncased guided bore holes shall be at a depth below finish grade no less than four times the diameter of the hole. Uncased guided bore holes shall be limited to a maximum of 12 inches. Bore holes in excess of 12 inches in diameter shall be cased, unless otherwise approved by the Engineer. Contractor shall stipulate the size of bore on the permit application.

Over drilling or final reaming of uncased guided bores should be limited to no more than one inch over the maximum cross section of the conduit bank, casing, or pipe. Annular spaces exceeding this requirement shall be pressure grouted.

Guided bore methods shall minimize over-reaming or over-drilling of holes. Fluids shall not cause scour of the bore hole beyond the previously noted tolerance. Controlled fluid boring is preferred and should utilize fluids to remove cuttings, stabilize and lubricate bore holes, soften soils for advancing bores, provide directional control of guided bores, and for cooling of drilling equipment. Uncontrolled jetting, where the primary purpose is to use fluid pressure to erode soil for creation of the final bore hole diameter, is prohibited. Methods which vary from these requirements shall require demonstration and shall have a history of successful use prior to acceptance. Any method utilized shall not disturb the soils outside the final bore hole diameter.

Unless site specific soil information is available indicating otherwise, caving of soils around bore holes should be assumed. Pipe, case, or conduit banks should be advanced during final reaming.

Guided bores through unstable granular soils and granular utility backfill should be stabilized with a pressurized bentonite slurry drilling fluid having a consistency of at least one pound of bentonite to five gallons of water, or an approved equal. The flow rate and applied pressure shall be monitored. A sudden loss of pressure indicates that slurry may be intruding excessively into the backfill. Cased bores may be used in lieu of stabilization.

SECTION 450

Equipment operators shall observe the bore hole and monitor cuttings for excessive soil removal. When evidence of excessive voids are found, bore holes shall be pressure grouted after placement of pipe, casing, or conduit banks.

SECTION 601

TRENCH EXCAVATION, BACKFILLING, AND COMPACTION

601.2.9 Shoring and Sheeting: is changed to add:

When vertical side walls are to be excavated and trench boxes are not used, the contractor shall do such trench bracing, sheathing, or shoring necessary to perform and protect the excavation as required for safety and conformance to governing laws. Shoring, sheeting, or other protective procedures reviewed by the Engineer or his designee for conformance to standards shall be required when the trench depth exceeds five feet. The contractor shall provide a shoring and bracing plan designed by his engineer for review for adherence to OSHA requirements. Spacing of shoring braces shall not exceed ten feet center to center.

601.2.10 Open Trench: the third paragraph is changed to add:

Steel plates shall be installed in accordance with Std Dtl 211. Where the steel plates are restrained by temporary asphalt, they may be required to be spot-welded together for any period of time that the contractor is not present to adjust for their longitudinal movement due to traffic.

601.4.3: Backfill: the first paragraph is changed to read:

Backfill under street pavement shall be half-sack CLSM per Section 728 and be constructed per Detail 200 with 16" minimum depth of ABC shelf, 'T-Top' pavement replacement unless otherwise stated on the construction plans or special provisions. Pavement matching and surface replacement shall be in accordance with Section 336.

SECTION 610

WATERLINE CONSTRUCTION

610.3 MATERIALS: is changed to read:

Pipe shall be ductile iron pipe in accordance with Section 750 or polyvinyl chloride (PVC) in accordance with COC Supplement Section 751 - PVC Pressure Pipe.

610.4 CONSTRUCTION METHODS: is changed to add:

All pipe shall be bedded in accordance with COC Detail C-308.

Polyvinyl Chloride pipe shall be installed in accordance with the AWWA Manual 23.

For all pipe materials, locator wire and marking tape shall be installed in accordance with COC Detail C-408.

610.7 VALVES: is changed to read:

Valves shall be installed in accordance with AWWA C600 or AWWA Manual 23, modified as follows.

610.11 METER SERVICE CONNECTIONS: is changed to add:

(E) Service taps shall be installed using an all bronze double-strap tapping saddle or a tapped tee. Any tapping saddle for use on PVC pipe shall provide full support around the circumference of the pipe and a bearing area for 2 inches minimum along the axis of the pipe.

610.15 TESTING: is changed to add:

The Contractor shall test water lines for water tightness, including all fittings and connections to the water lines. Each pipe shall be tested for leakage and pressure in accordance with applicable provisions of AWWA standards and/or Manuals, except as modified below.

The Contractor shall provide all vents, piping, plugs, bulkheads, valves, bracing, blocking, pump, including measuring devices and all other equipment necessary for making the tests, except pressure gauges.

The pipe shall be tested between each valve or between a valve and the closed end of the pipe. Pipe test sections shall be limited to ½ linear mile or less, unless otherwise approved in writing by the Engineer.

All connections, blow-offs, hydrants and valves shall be tested with the main, where practical.

The test section shall be slowly filled with potable water and all air shall be vented from the line. The rate of filling shall be as approved by the Off-site Inspector, with at least 24 hour notice required before filling is scheduled.

(A) Pressure Tests: is changed to add:

Water lines, including all fittings and connections, shall be tested for water tightness by subjecting each test section to a pressure test. The test pressure shall be measured at the lowest end of the test section. The test pressure shall be 188 psi unless otherwise specified. The duration of each pressure test shall be at least 2 hours.

The pressure test shall begin after the pipe has been filled with water for at least 24 hours to allow for absorption.

(B) Leakage Tests: is changed to read:

Leakage tests shall be made after the pressure test has been completed, pressure test results are satisfactory, and all backfilling and compaction is completed.

The duration of each leakage test shall be at least 2 hours. Leakage test pressure shall be at least 150 psi and not vary more than 5 psi during the test.

The maximum allowable leakage from the pipe line shall be determined by the applicable formula:

$$L = ND\frac{\sqrt{P}}{7400}$$

in which:

L = allowable leakage in gallons per hour

N = number of joints in the pipe line being tested, with no allowance for joints at branches, blow-offs, fittings, and similar appurtenances. "N" is calculated using the standard length of pipe installed divided into the length being tested.

D = nominal inside diameter of pipe in inches

P = average test pressure, in psi gage, as measured at the lowest point in the test section.

Should the test on any section of the pipe line show leakage greater than that specified above, the Contractor shall locate and correct the deficiency and retest until the leakage is within the

specified allowance for a 2 hour duration. All repairs and retests shall be the contractor's responsibility and expense.

Leakage is defined as the quantity of make-up water necessary for the test section to maintain the specified leakage test pressure after the pipe line has been filled with water and all air expelled.

SECTION 615

SEWER LINE CONSTRUCTION

615.1 DESCRIPTION: is modified to add:

Polypropylene pipe shall conform to Section 739.

615.4 LAYING PIPE: is changed to read:

HDPE, polypropylene, and PVC pipe and fittings shall be installed in accordance with ASTM D-2321.

Pipe bedding for polypropylene pipe shall be ABC in accordance with Section 701.

615.6.2 Water Stops is changed to read:

Water stops will be required when connecting HDPE and polypropylene pipe to concrete structures, manholes, etc.

615.7 SANITARY SEWER SERVICE TAPS: is modified to add:

Sanitary sewer service taps for polypropylene pipe shall be made utilizing standard manufacturer fittings.

615.10 BACKFILLING: is modified to add:

Backfilling and compaction shall be in accordance with Section 601 and ASTM D2321 for polypropylene pipe.

615.11 TESTING (C) is changed to read:

(C) Deflection Test for HDPE, Polypropylene, and PVC Pipe

In addition to the tests prescribed above, the Contractor shall perform a deflection test on the system as directed by the Engineer. Any part of the installation which shows deflection in excess of 5% of the nominal inside diameter per Section 738 for HDPE pipe, or in excess of 5% of the minimum inside diameter per ASTM F-2736 or F-2764 for polypropylene pipe, or in excess of 5% of the average inside diameter per ASTM D-3034 for PVC pipe, shall be corrected.

SECTION 616

RECLAIMED WATERLINE CONSTRUCTION

616.2 MATERIALS: is changed to read:

Valve boxes shall be in accordance with Section 345, this Section, Detail 391 and COC Detail C-406.

616.3 INSTALLATION: is changed to add:

Pipe will be bedded in accordance with COC Detail C-308 and identified in accordance with C-408.

SECTION 618

STORM DRAIN CONSTRUCTION

618.1 DESCRIPTION: is changed to read:

This section covers concrete, polypropylene and high density polyethylene (HDPE) pipeline construction used for the conveyance of irrigation water and storm drainage in streets, easements, and alley rights-of-way, under low hydrostatic heads.

618.2 MATERIALS: is changed to read:

Polypropylene pipe and fittings shall be in accordance with COC Supplement Section 739 - Polypropylene pipe & Fittings for Storm Drain and Sanitary Sewer.

Pipe bedding for polypropylene pipe shall be ABC in accordance with Section 701.

618.3 CONSTRUCTION METHODS: is changed to add:

Water stops will be required when connecting HDPE and polypropylene pipe to concrete structures, manholes, etc.

Lateral service taps for polypropylene pipe shall be made utilizing standard manufacturer fittings.

Backfilling and compaction shall be in accordance with Section 601 and ASTM D2321 for polypropylene pipe.

SECTION 625

MANHOLE CONSTRUCTION AND DROP SEWER CONNECTIONS

625.3 CONSTRUCTION METHODS is changed to add:

Manholes constructed as a separate project or permit from subsequent surface improvements shall be constructed with a minimum of 12" and a maximum of 24" of reinforced concrete adjusting rings. All other project manholes shall conform to Detail 420.

Manholes constructed in arterial streets or serving sewer lines 18" in diameter or greater shall be coated with a corrosion-protective coating applied in accordance with the manufacturer's specification. Refer to the City of Chandler *List of Approved Products* for allowable corrosion-protective coating products.

All manholes shall be coated with an latex insecticide coating applied in accordance with the manufacturer's recommendations. Refer to the City of Chandler *List of Approved Products* for allowable insecticide coating products. The coating shall be applied in accordance with US Environmental Protection Agency recommendations starting from the top of the bench to a level eight feet above.

SECTION 630

TAPPING SLEEVES, VALVES AND VALVE BOXES ON WATERLINES

630.2 GENERAL: is changed to add:

Potable water valve boxes shall conform to Detail 391, Type 'C', deep skirted lid type and COC Detail C-307.

Reclaimed water valve boxes shall conform to Detail 391, Type 'C', deep skirted lid type with a square surface box and COC Detail C-406.

630.3 GATE VALVES: is changed to add:

The connecting ends of valves may be flange, mechanical joint, push-on, or an appropriate combination. Valves which require transition gaskets to ductile iron pipe sizes may be furnished only in sizes 4 inches through 8 inches.

630.4.2 Tapping Sleeves Subsection (A) (2) (a) is changed:

Following the word Cast Iron, add

(Not allowed for use on PVC pipe).

SECTION 718

PRESERVATIVE SEAL FOR ASPHALTIC CONCRETE

718.1 GENERAL is changed to add:

Type E - Tire Rubber Modified Surface Seal (TRMSS) consisting of a clay-stabilized cationic asphalt emulsion of asphalt cements modified with terminal-blended, digested ground scrap tire rubber. Applies at 0.1 to 0.2 gallons per square yard, undiluted.

718.2 TEST METHODS AND REQUIREMENTS is changed to add:
Type E TRMSS preservative seal shall meet the requirements of Table 718-2 by certification from the manufacturer.

TABLE 718-2

Treated Base Asphalt Characteristics (prior to emulsification)		
Test Property	**Test Procedure**	**Requirement**
Tire Rubber Content, %		10% minimum
Flash Point, °F	ASTM D 93	> 550°F
Softening Point, °F	ASTM D 36	> 130°F
Penetration, 77°F, dmm	ASTM D 5	12 to 30 dmm
Solubility, %	ASTM D 2042	> 98.5%

Emulsion Characteristics		
Test Property	**Test Procedure**	**Requirement**
Uniformity	ASTM D 2939.05	PASS Product shall be homogenous and show no separation or coagulation that cannot be overcome by moderate stirring.
Viscosity, Kreb Unit	ASTM D 562	35 to 85 KU
Specific Gravity	ASTM D2939.07	< 1.04
Residue by Evaporation	ASTM D 2939.08	> 33%
Residue Softening Point, °F	ASTM D 36	> 250°F Sample evaporated within Softening Point Ring in conformance to ASTM D 2939.08 at 190 to 200°F.

SECTION 718

Performance Based Characteristics

A ceramic tile panel shall be incorporated in place of the metal panels. The ceramic tile panel preparation shall be in accordance with Test Methods D 2939-25.1.1 guidelines.

Test Property	Test Procedure	Requirement
Resistance to Heat	ASTM D 2939.14	PASS No sagging or slippage of film beyond the initial reference line after 212°F exposure for 2 hrs.
Resistance to Water	ASTM D 2939.15	PASS No blistering or re-emulsification after 24 hr submersion in water.
Wet Flow	ASTM D 2939.19	PASS No flow beyond initial reference line.
Direct Flame Test	ASTM D 2939.20	PASS No continued combustion or slippage and run-down.
Wet Film Continuity	ASTM D 2939.22	PASS A uniformly homogenous consistency.
Resistance to Kerosene	ASTM D 2939.25	PASS Report any evidence of leakage of kerosene, loss of adhesion and discoloration of tile.
Wet Track Abrasion Test	ISSA (TB-100)	< 2% Calculated weight loss, percentage of original volume.
Accelerated Weathering Test	ASTM G 154 1000 hrs UVA-340 lamp, 0.77 W/m^2 (v1.0 calibration), 8 hrs UV light at 50°C, 5 min spray, 3:55 hrs condensation at 50°C	PASS No cracking, chipping, surface discoloration or loss of adhesion. No color fading or lightening.

SECTION 739

POLYPROPYLENE PIPE & FITTINGS FOR STORM DRAIN AND SANITARY SEWER

739.1 GENERAL:

This specification presents the requirements for polypropylene pipe utilized for gravity flow, low pressure storm drain and sanitary sewer systems.

739.2 MATERIALS:

Pipe and fittings shall be double wall, smooth interior, with annular exterior corrugations in conformance to ASTM F-2736 for pipe diameters up to and including 24". Pipe and fittings shall be triple wall, smooth interior and exterior, with annular inner corrugations in conformance to ASTM F-2764 for pipe diameters 30" to 60".

739.3 JOINTING SYSTEMS:

Pipe shall be joined with a gasketed integral bell and spigot joint. The joint shall be water-tight in accordance with ASTM D-3212. Sanitary sewer pipe shall have dual gaskets. Gaskets shall conform to ASTM F-477. They shall be installed by the pipe manufacturer and covered with a removable protective wrap to ensure the gasket is free of debris. A manufacturer-recommended joint lubricant shall be applied during assembly. The pipe bells shall be reinforced with a polymer composite band installed by the manufacturer.

739.4 FITTINGS:

Lateral pipes shall be connected to the main by manufactured fittings. Water stops in accordance with ASTM C-923 shall be installed at structures. Water stops, joint seals, field repair couplers, and connections to dissimilar pipe shall be in accordance with manufacturer's recommendations, and shall be submitted to the City for approval prior to use.

SECTION 751

POLYVINYL CHLORIDE (PVC) PRESSURE PIPE

751.1 GENERAL:

These specifications apply to Polyvinyl Chloride (PVC) pressure pipe intended for use as potable, wastewater, and reclaimed water distribution pipelines, which carry water under pressure.

751.2 WORKMANSHIP:

Pipe shall be homogeneous throughout. It shall be free of voids, cracks, inclusions, or other defects. It shall be as uniform as commercially practical in color, density, and other physical properties. Pipe surfaces shall be free from nicks and scratches. Joining surfaces of spigots and other joints shall be free from gouges and imperfections that could cause leakage. The contractor shall supply the Engineer with certified third party test data establishing both the long-term compressive strength and the long-term modulus of elasticity of the PVC material.

751.3 MATERIAL:

4 inch through 12 inch PVC pressure pipe shall be designed, manufactured and tested in accordance with AWWA C900, latest edition. The barrel of furnished pipe shall conform to the outside dimensions of steel pipe (IPS) or cast-iron-pipe-equivalent (CI), and with the wall thickness of dimension-ratio (DR) Series 14. All approved PVC pipe shall carry a NSF rating.

The pressure rating for C900 pipe shall be 200 psi minimum.

16 inch and larger PVC pressure pipe shall be designed, manufactured, and tested in accordance with AWWA C905, latest edition. The barrel of furnished pipe shall have an iron-pipe-size-equivalent (IPS) outside diameter and wall thickness equal to the dimension-ratio (DR) Series 18.

The pressure rating for C905 pipe shall be 235 psi.

All PVC pipe furnished shall be integral bell with elastomeric gaskets. Plain ends with elastomeric gasket couplings will be allowed only for intermediate pipe lengths. PVC joints using elastomeric gaskets to achieve the pressure seal shall be tested as assembled joints and shall meet the laboratory performance requirements specified in ASTM D3139.

A Manufacturer's Affidavit for compliance to AWWA C900 and AWWA C905 shall be furnished. The manufacturer shall provide documentation of the long-term compressive strength of the pipe material, or the long-term hydrostatic design strength, which shall be certified by an independent third party.

SECTION 751

All required manufacturing quality control inspection and testing shall be performed in the United States of America at the pipe manufacturer's plant or at an approved testing laboratory in the United States. The seal of the testing agency that verified the suitability of the pipe material for potable water service shall be marked on the pipe. In addition, markings on the pipe shall include the following:

Nominal size and OD base

Material code designation

Dimension ratio number

AWWA pressure class

AWWA designation number for this standard

Manufacturer's name or trademark and production record code.

Pipe shall be supplied within 270 days of its manufacture. A Manufacturer's written Verification of date of manufacture shall be provided.

751.4 APPLIED LOAD CALCULATIONS:

Assumption of soil arching shall not be used in calculation embankment loads over PVC pipe. The prism earth load formula shall be used to determine earth loads.

$$Wc = HwBc$$

Where:

Wc = Embankment Load, lbs/ft

H = Depth of soil cover, ft

w = Soil Density, lbs/ft

Bc = Pipe outside diameter, ft

751.5 BEDDING:

Pipe bedding shall be in conformance with COC Detail C-308. Bedding shall consist of ABC in conformance to Section 702.

751.6 FITTINGS:

SECTION 751

Fittings shall be ductile iron and conform to AWWA C110 or C153 for 250 psi minimum working pressure rating.

All fittings shall be cement lined in accordance with AWWA C104.

Fittings which require transition gaskets to ductile iron pipe sizes may be furnished only in sizes 6 inch through 8 inch.

PVC connections to asbestos cement or ductile iron pipe shall be ductile or gray iron adapters.

751.7 STORAGE:

Storage of PVC pipe shall be in accordance with the manufacturer's recommendation and guidelines. PVC pipe and fittings shall be stored in a dry, ventilated area that protects the pipe form UV radiation and the elements. Pipe stockpiled at the construction site shall not remain exposed to the elements and weather in excess of 24 hours, or as approved by the Engineer.

PVC pipe shall be delivered to the site and stored and handled in accordance with the manufacturer's instructions. During shipment and storage, the pipe ends shall be securely covered. PVC pipe shall be stored in a manner such that it is protected from exposure to sunlight and/or extreme heat.

751.8 THRUST BLOCKS:

Thrust blocks shall be installed per Section 610.14.

SECTION 756

DRY BARREL FIRE HYDRANTS

756.3 HYDRANTS is changed to add:

Refer to the *List of Approved Products* for fire hydrants approved for use.

An effective vandal-proof device to prevent unauthorized opening of fire hydrants shall be provided with each hydrant. Operating nuts shall be drilled and tapped per COC Detail C-304. The device shall readily attach to the existing fire hydrant housing or opening mechanism. Materials shall be strong enough to withstand acts of vandalism and weather extremes and still provide smooth hydrant operation. The device shall be unique in that only a special magnetic wrench can open or close the hydrant.

An inner barrel construction of high tensile manganese bronze shall be designed to fit over the existing fire hydrant operating nut. An outer housing constructed of stainless steel shall be installed over the inner barrel so as to swivel freely until a special key wrench is used. Attachment of the outer housing shall be by a special snap ring groove designed to withstand repeated blows by sledge hammers without shearing.

A mating collar shall be installed between the outer housing hydrant top for a weather seal and to prevent removal of the swivel housing by pry bars or other tools available to vandals. The mating collar shall extend up the sides of the swivel housing and to a height sufficient to provide added protection for the hydrant operating nut and to resist repeated blows by sledge hammers.

A special key wrench shall be constructed of an aluminum-magnesium alloy. The wrench shall incorporate a unique permanent magnet, which will engage an activator located inside the outer housing. Performance must not be affected by local environmental temperature ranges or weather conditions. The special key wrench will be the only means of opening or closing the hydrant. As an added convenience, the opposite side of the key wrench shall contain a conventional pentagon recess that will work on a standard hydrant. Refer to the *List of Approved Products* for fire hydrants locks approved for use.

SERIES C-100 GENERAL INFORMATION (C-100 TO C-113)

C-100 Hazard Marker Placement

C-103 Fiber Optic Cable Splicing Vault

* C-104 Fiber Optic Cable Ducts

C-105 Guard Post for Backflow Prevention Assemblies

C-108 Air Gap Backflow Protection for Water Tanks

~~* C-109 Shallow Pit Percolation Test Requirements~~ [DELETED - USE DOUBLE-RING INFILTROMETER]

~~* C-110 Pavement Cut and Patch~~ [DELETED - USE MAG STD DTL 200]

* C-111 Minimum Pothole Spacing for Pavement Restoration Fee Exemption

C-112 Engineered Utility Bore

* C-113 Trash Receptacle Enclosure

SERIES C-200 STREETS (C-200 TO C-257)

C-200 Standard Utility Locations - Arterial Streets

C-201 Standard Utility Locations - Collector Streets

C-202 Standard Utility Locations - Local Streets

C-203 Major Arterial Street - Typical Cross Section

C-204 Phased Major Arterial Street - Typical Cross Section

C-205 Minor Arterial Street - Typical Cross Section

* C-206 Collector Street with Median - Typical Cross Section

* C-208 Industrial Collector Street - Typical Cross Section

* C-209 Residential Collector Boulevard - Typical Cross Section

* C-210 Residential Collector Street - Typical Cross Section

* C-211 Local Street with Median - Typical Cross Section

* C-212 Local Boulevard with Frontages Less Than 65' - Typical Cross Section

* C-213 Local Street - Typical Cross Section

** Latest Revision February 2012
* Latest Revision January 2011

SERIES C-200 STREETS (C-200 TO C-257)

* C-221	Local Boulevard with Frontages of 65' to 90' - Typical Cross Section	C-234	Speed Hump
* C-222	Local Boulevard - Typical Cross Section	C-236	Interlocking Paving Blocks and Decorative Concrete - Traveled Surfaces
C-223	Standard Major Arterial/Major Arterial Intersection Right-Of-Way, and Street Dimensions	C-237	Interlocking Paving Blocks and Decorative Concrete - Non-Traveled Surfaces
C-224	Major Arterial Deceleration Lane	C-238	Decorative Concrete at Grade - Traveled Surface
C-225	General Median Design	C-239	Depth of Base Course - Major & Minor Arterials
C-226	"Left In Only" Median Design 16' Wide Median	C-240	Depth of Base Course - Non Residential Collector and Local Streets
C-227	"Left In Only" Median Design 40' Wide Median	C-241	Depth of Base Course - Residential Collector Streets
C-228	Typical Driveway Access to Private Gated Community	C-242	Depth of Base Course - Residential Local Streets
C-229	Left Turn Bay on Two-Lane Roadway (Temporary Widening, Cross Street on One Side Only)	* C-243	Sidewalk Ramp for Roll Curb
C-230	Concrete Bus Bays	** C-244	Sidewalk Ramp at Intersections for Roll Curb
C-231	Right Turn/Deceleration Lane for Driveways	C-245	Combined Sidewalk Ramp and Residential Driveway
C-232	Cul-De-Sac	* C-246	Sight Distance
C-233	Valley Gutter	* C-247	Sight Distance for Low Speed Local or Collector Streets

** Latest Revision February 2012
* Latest Revision January 2011

SERIES C-200 STREETS (C-200 TO C-257)

	C-248	Key Lot Sight Distance
**	C-249	Accessible Ramp Acceptance
	C-250	Left Turn Bay in 40' Median Design
	C-251	Alley Pavement Lot Drainage from Alley
	C-252	Alley Pavement Lot Drainage to Alley
	C-253	Decorative Concrete
	C-254	Arterial/Collector Roadway Landscape Drainage
	C-255	Typical Roundabout
	C-256	Typical Raised Crosswalk
**	C-257	Sidewalk Scoop Ramp Detail for Return Driveway
**	C-258	Directional Sidewalk Ramp
**	C-259	Modified Entrance

SERIES C-300 WATER (C-300 TO C-321)

	C-300	Flushing Pipe Assembly with Ball Valve
	C-301	Water Service Installation
	C-302	Residential Backflow Prevention Assembly Installation - 1" or Under
**	C-303	Fire Hydrant
	C-304	Fire Hydrant Lock
**	C-305	Locations for New Fire Hydrant
**	~~C-306~~	~~Fire Hydrant Reflector Locations~~ (DELETED - USE MAG STD DTL 200)
	C-307	Valve Box Installation (Potable Water)
	C-308	PVC Water Pipe Bedding Detail
*	C-309	Pressure Vacuum Breaker Assembly Installation - 2" and Under
*	C-310	Double-Check Valve Backflow Prevention Installation - 3" and Under
*	C-311	Reduced Pressure-Principle Backflow Prevention Assembly Installation - 3" and Under
*	C-312	Double Check Valve Backflow Prevention Assembly 2 1/2", 4", 6", 8", 10" Private Domestic Water Main

** Latest Revision February 2012
* Latest Revision January 2011

SERIES C-300 WATER (C-300 TO C-321)

	C-314	Double Check Valve Backflow Prevention Assembly 3", 4", 6", 8", 10"
*	C-315	Reduced Pressure Principle Assembly 3", 4", 6", 8", 10"
	C-316	3" and Larger Water Meter
	C-317	Concrete Collar Detail - Water Valve Box Placement - Unpaved Areas
*	C-319	2" Combination Air/Vacuum Valve Assembly
	C-320	Water Vault for 24" Gate Valve
*	C-321	Water Quality Monitoring Station

SERIES C-400 WASTERWATER (C-400 TO C-416)

	C-400	Manhole Cover
	C-401	Manhole Concrete Collar Detail
	C-402	Sewer Pipe Bedding Detail
	C-404	Small Water User (Without Lake) Reclaimed Water Turn-Out
	C-405	Large Water User (With Lake) Reclaimed Water Turn-Out
	C-406	Valve Box Installation (Reclaimed Water)
*	C-408	Pipe Locator Tape & Wire
	C-409	Pipe Penetration and Manhole Frame Termination Detail
	C-410	Deep Cut House Connection (Sewer Lateral)
	C-411	Building Sewer Connection
*	C-416	Reclaimed Meter Vault

** Latest Revision February 2012
* Latest Revision January 2011

SERIES C-500 STORM SEWER & DRAINAGE (C-500 TO C-509)

C-500 Scupper

C-501 Dry Well System Detail and Specifications

C-502 Dry Well System

C-503 Trash Rack/Access Barrier

C-504 Retention Basin Inlet

C-506 Catch Basin Grates

C-507 Below Grade Retention Basin Inlet (Bubbler Box)

C-508 Storm Drain Inlet Marker

C-509 Backfill Detail CMP Underground Retention Storage Tank

SERIES C-600 SIGNAGE (C-600 TO C-623)

C-600 Median Signage

C-601 Street Name Signs (For Public Streets)

C-602 Collector Road Pavement Markings

C-603 Metro Street Name Sign Standard

C-604 Address Identification for Cluster Developments

C-605 Street Name Signs (For Private Streets)

C-606 Internally Illuminated Street Name Sign

C-607 Internally Illuminated Street Name Sign Bracket Assembly

C-608 Internally Illuminated Street Name Sign J/R Pole Mounting

C-609 Internally Illuminated Street Name Sign F Pole Mounting

C-610 Internally Illuminated Street Name Sign F Pole Mounting Detail

C-611 Handicap Parking Space Sign

C-612 Handicap Pavement Marking Symbol

** Latest Revision February 2012
* Latest Revision January 2011

SERIES C-600 SIGNAGE (C-600 TO C-623)

C-613 Sign Post and Base

C-614 Pavement Marking Details

C-615 Sign Post and Base Locations For Residential Streets

C-616 Right Turn Land Drop

C-617 Unassigned

C-618 Typical Signs and Markings Arterial Road

C-619 Typical Lane Widths - Arterial Road With Double Left Turns

C-620 Major Arterial Deceleration Lane Signing and Striping

C-621 Arterial Signage

C-622 Arterial Roadway Markings (W/O Medians)

* C-623 Intersection Markings (With Medians)

** Latest Revision February 2012
* Latest Revision January 2011

SERIES C-800 LANDSCAPE AND IRRIGATION (C-801 TO C-80X)

** C-801 Tree Planting and Staking

** C-802 Tree Planting - Slope

** C-803 Palm Planting and Bracing

** C-804 Cactus and Accent Planting

** C-805 Shrub and Ground Cover Planting

** C-806 Plant Pit Schedule

** C-807 Landscaped Median

** C-808 Emitter Access Box and Emitter Layout

** C-809 Electric Remote Control Valve - Turf

** C-810 Electric Remote Control Valve - Drip

** C-811 Irrigation Trench

** C-812 Bubbler

** C-813 Gear-Driven Pop-Up Rotor

** C-814 Pop-Up Spray Head

** C-815 Quick Coupler

** C-816 Typical Irrigation Legend and Information

** C-817 Emitter and Bubbler Schedule

** Latest Revision Febuary 2012

GENERAL INFORMATION

C-100 TO C-113

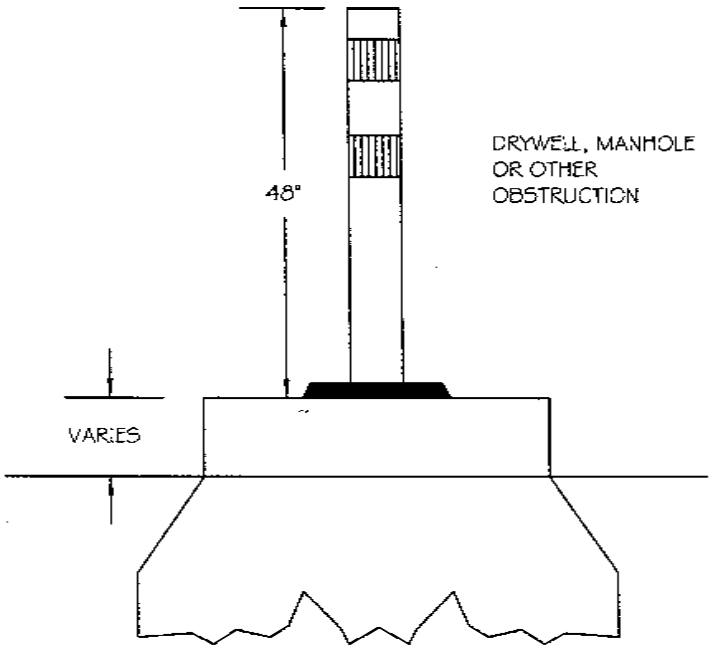

RAISED OBSTRUCTIONS

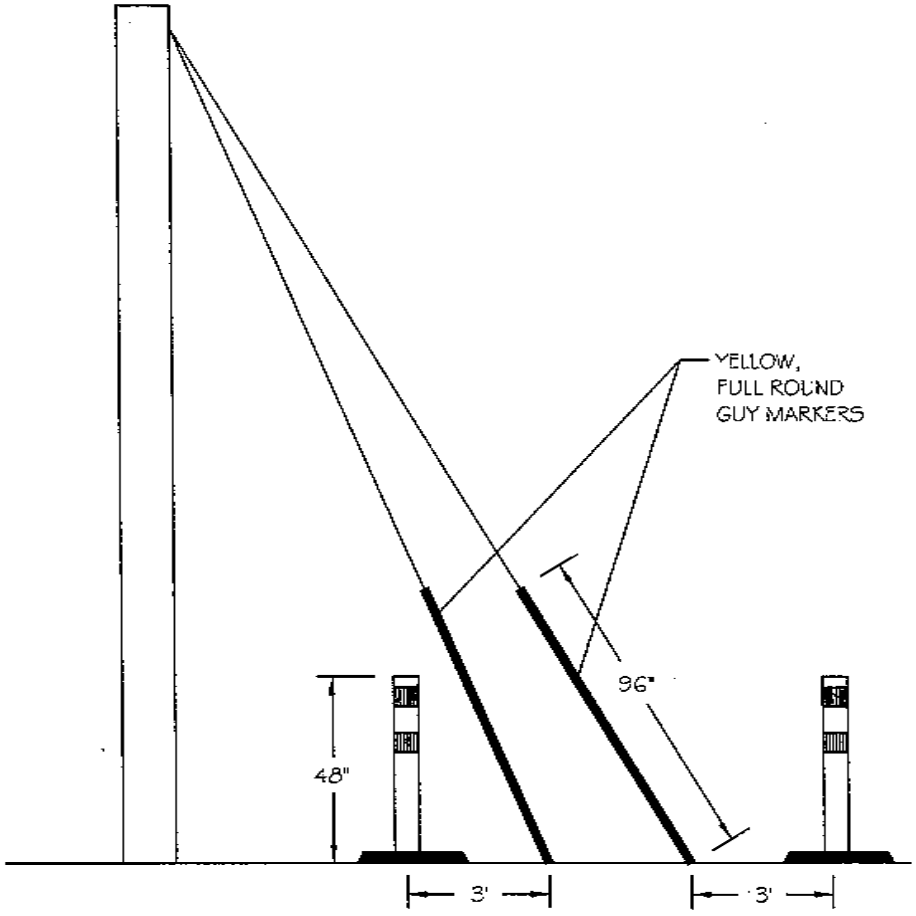

DOWN GUY WIRES

NOTES:

1. HAZARD MARKERS SHALL BE INSTALLED WHEN AN OBSTRUCTION MAY POSE A HAZARD TO MOTORIZED VEHICLES, MOWING EQUIPMENT, PEDESTRIANS, MAINTENANCE OPERATIONS OR AS DIRECTED BY THE ENGINEER.
2. HAZARD MARKERS SHALL MEET THOSE SPECIFICATIONS AS SHOWN IN MAG STD DTL 141.
3. MAG STD DTL 141 TYPE 2 MAY BE USED AROUND RAISED OBSTRUCTIONS AS AN ALTERNATE; HOWEVER, THREE (3) MARKERS MUST BE PLACED AT 120° INTERVALS AROUND THE OBSTRUCTION.

DETAIL NO. C-100 NTS	CITY OF CHANDLER STANDARD DETAIL	**HAZARD MARKER PLACEMENT**	APPROVED: Dan Cole CITY ENGINEER DATE: 01/19/10	DETAIL NO. C-100 NTS

DRAWING COURTESTY OF UTILITY VAULT CO.

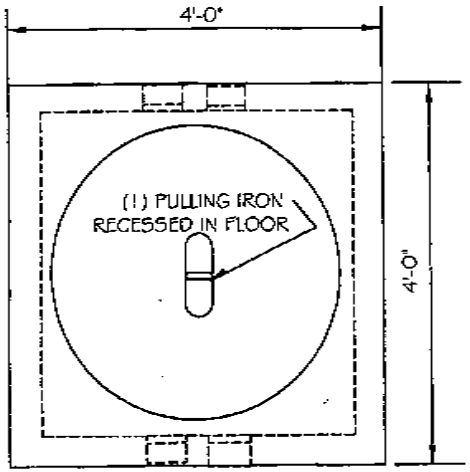

PLAN VIEW

NOTES:

1. VAULT SHALL BE UTILITY VAULT CO. #444-TA OR APPROVED EQUAL.
2. FRAME AND COVER SHALL BE MAG STD DTL 536 - ALTERNATE COVER FOR CURB OPENING CATCH BASINS.
3. COVER SHALL BE FILLED WITH CONCRETE, BROOM FINISHED, AND STAMPED WITH CITY OF CHANDLER LOGO.

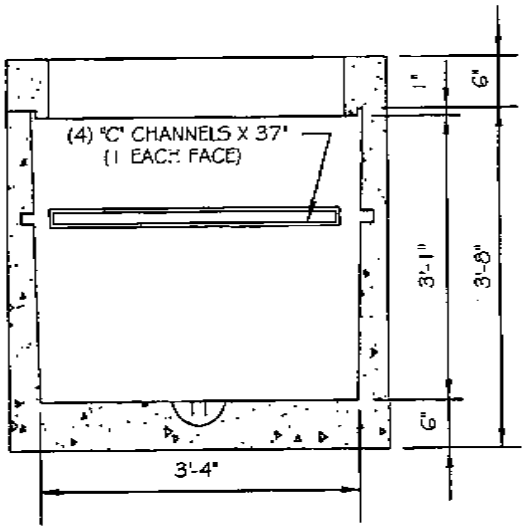

SECTION VIEW A-A

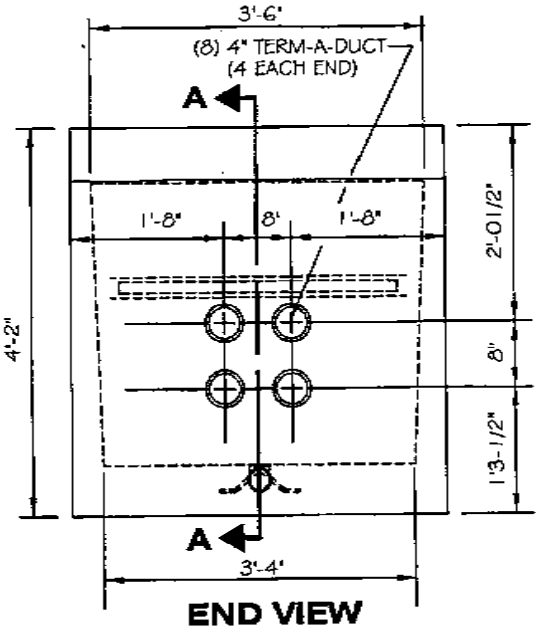

END VIEW

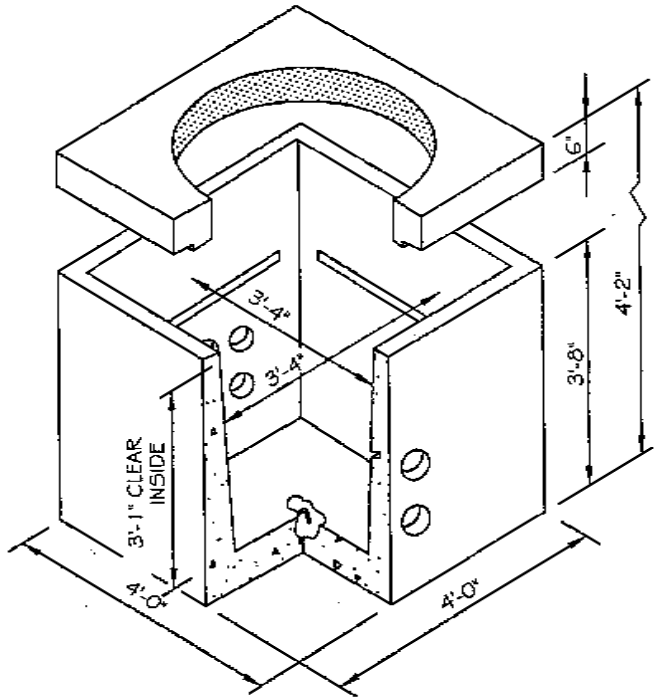

ISOMETRIC VIEW

DETAIL NO. C-103 NTS	CITY OF CHANDLER STANDARD DETAIL	FIBER OPTIC CABLE SPLICING VAULT	APPROVED: CITY ENGINEER DATE: 01/08/09	DETAIL NO. C-103 NTS

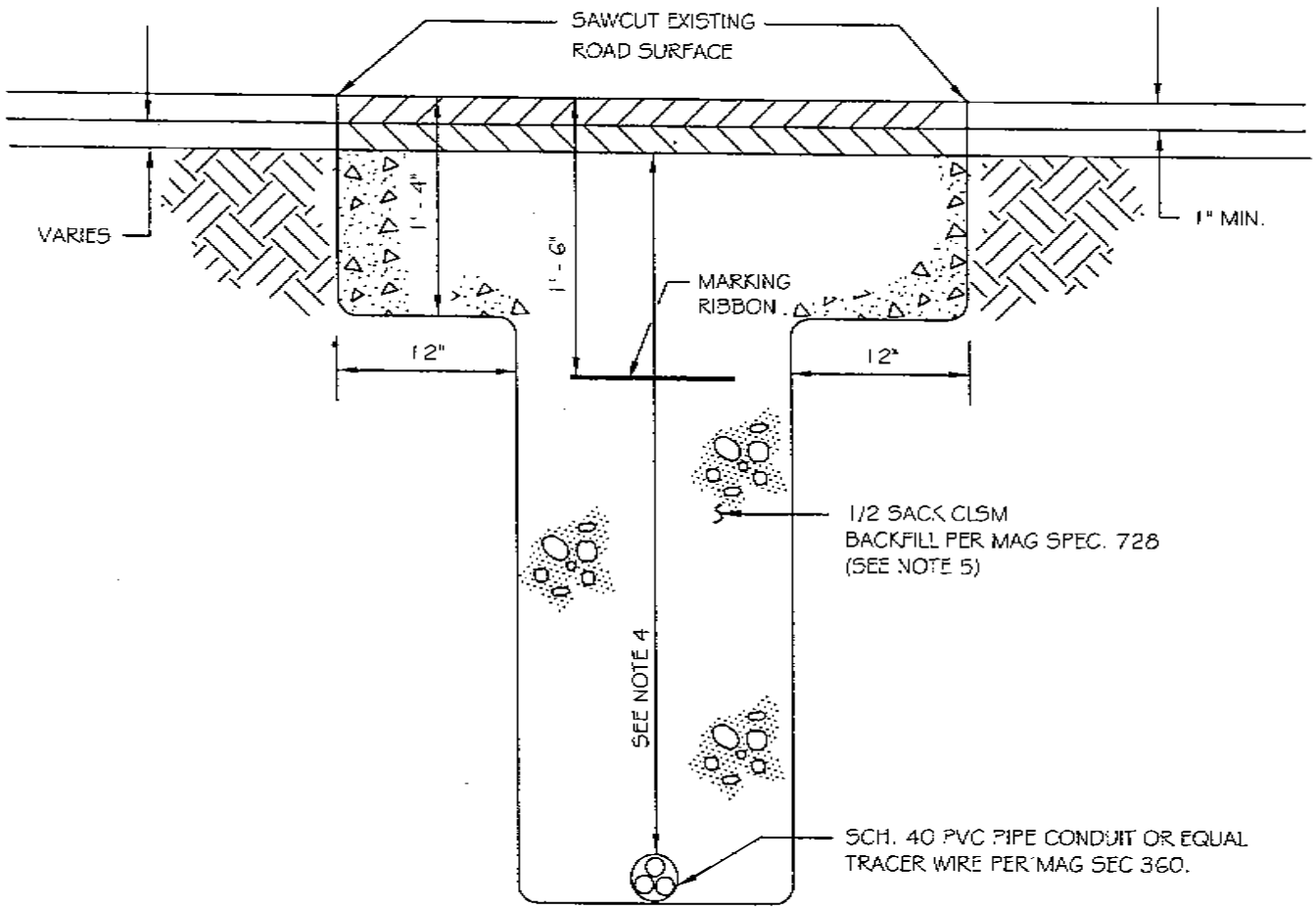

NOTES:

1. MARKING RIBBON TO BE 3" MINIMUM WIDTH, 5 MIL THICK METALLIC DETECTABLE TAPE WITH THE MESSAGE "CAUTION - FIBER OPTIC CABLE BURIED BELOW".
2. FOR BORES OR PUSHES, STEEL SLEEVES MUST BE USED.
3. REPLACE ROAD SURFACE PER MAG STANDARD DETAIL 200 'T' TOP.
4. INSTALLATION SHALL BE PER MAG SECT 360.
5. NATIVE MATERIAL CAN BE UTILIZED FOR BACKFILL IN P.U.E. OR MIN. 2 FEET FROM SURFACE IMPROVEMENTS.

DETAIL NO. C-104 NTS	CITY OF CHANDLER STANDARD DETAIL	**FIBER OPTIC CABLE DUCTS**	APPROVED: CITY ENGINEER DATE: 01-27-11	DETAIL NO. C-104 NTS

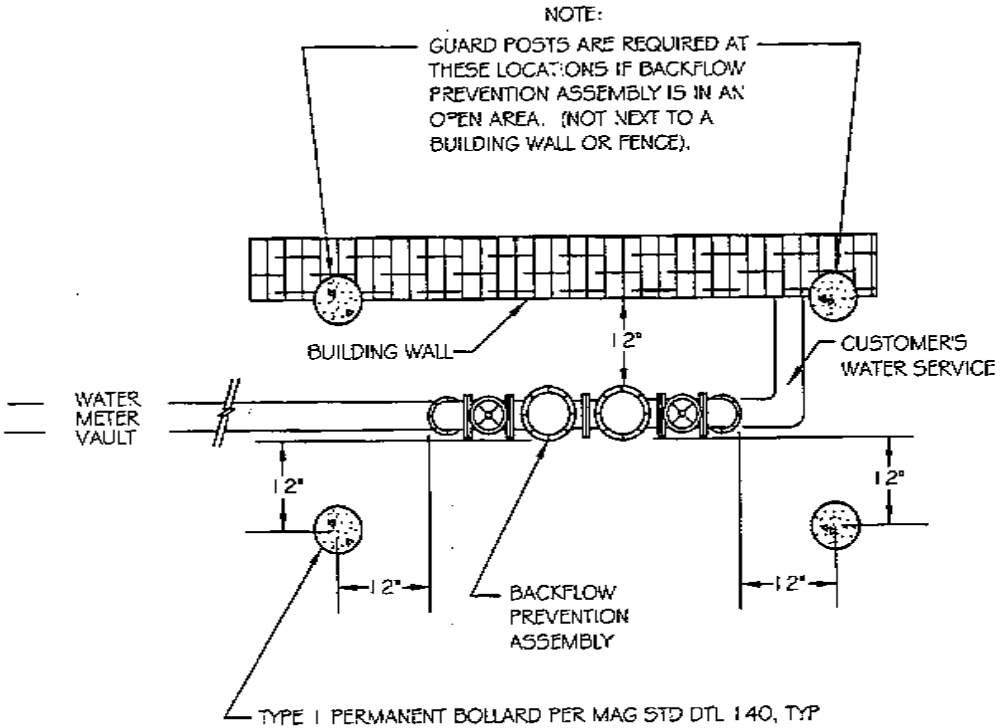

GUARD POST FOR BACKFLOW PREVENTION ASSEMBLY

DETAIL NO. C-105 NTS	CITY OF CHANDLER STANDARD DETAIL	GUARD POST FOR BACKFLOW PREVENTION ASSEMBLIES	APPROVED: CITY ENGINEER DATE: 01/08/09	DETAIL NO. C-105 NTS

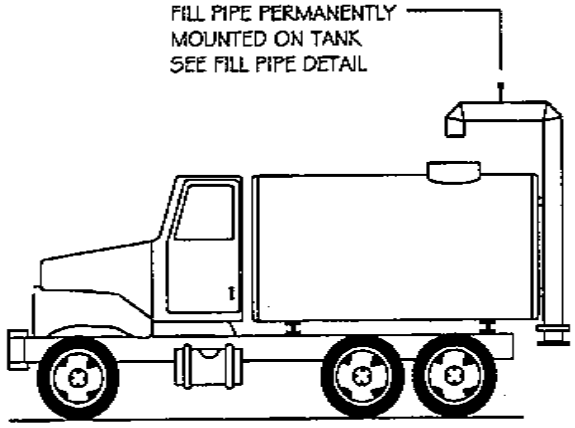

WATER TRUCK

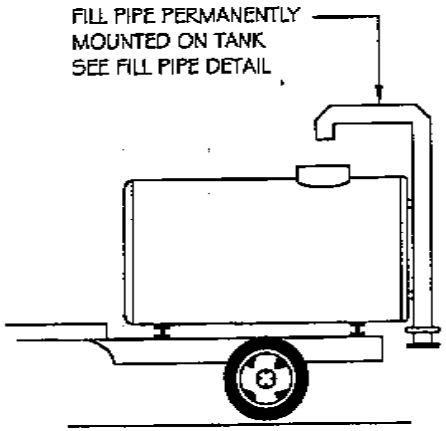

WATER WAGON

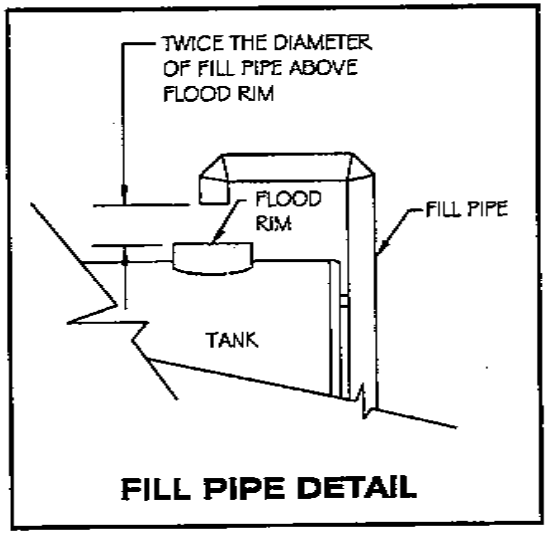

FILL PIPE DETAIL

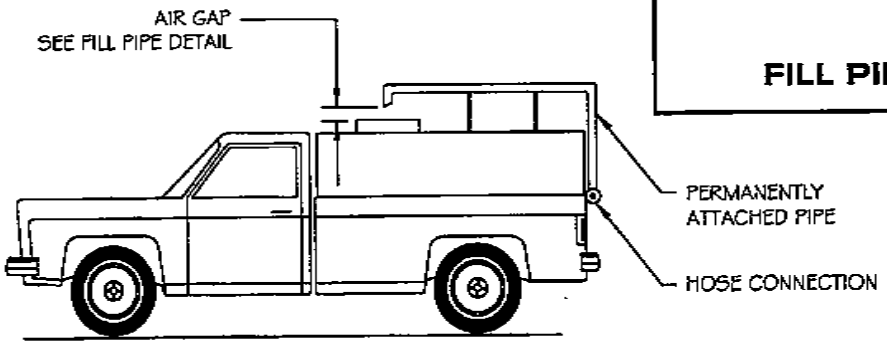

WATER TRUCK

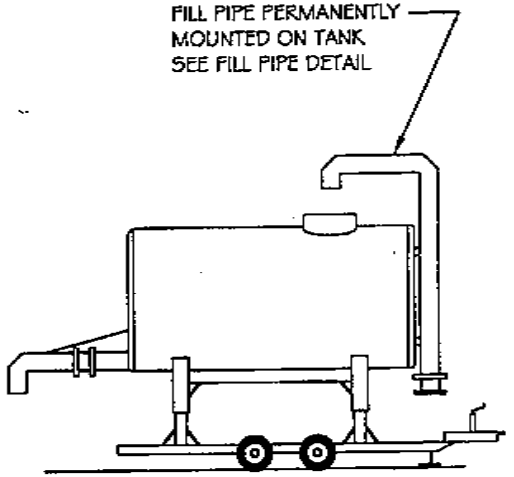

ELEVATED TANK

C-108 **REPLACES** **95**	CITY OF CHANDLER STANDARD DETAIL	**AIR GAP BACKFLOW PROTECTION FOR WATER TANKS**	APPROVED: _____ CITY ENGINEER DATE: 11-19-99	DETAIL NO. **C-108** NTS

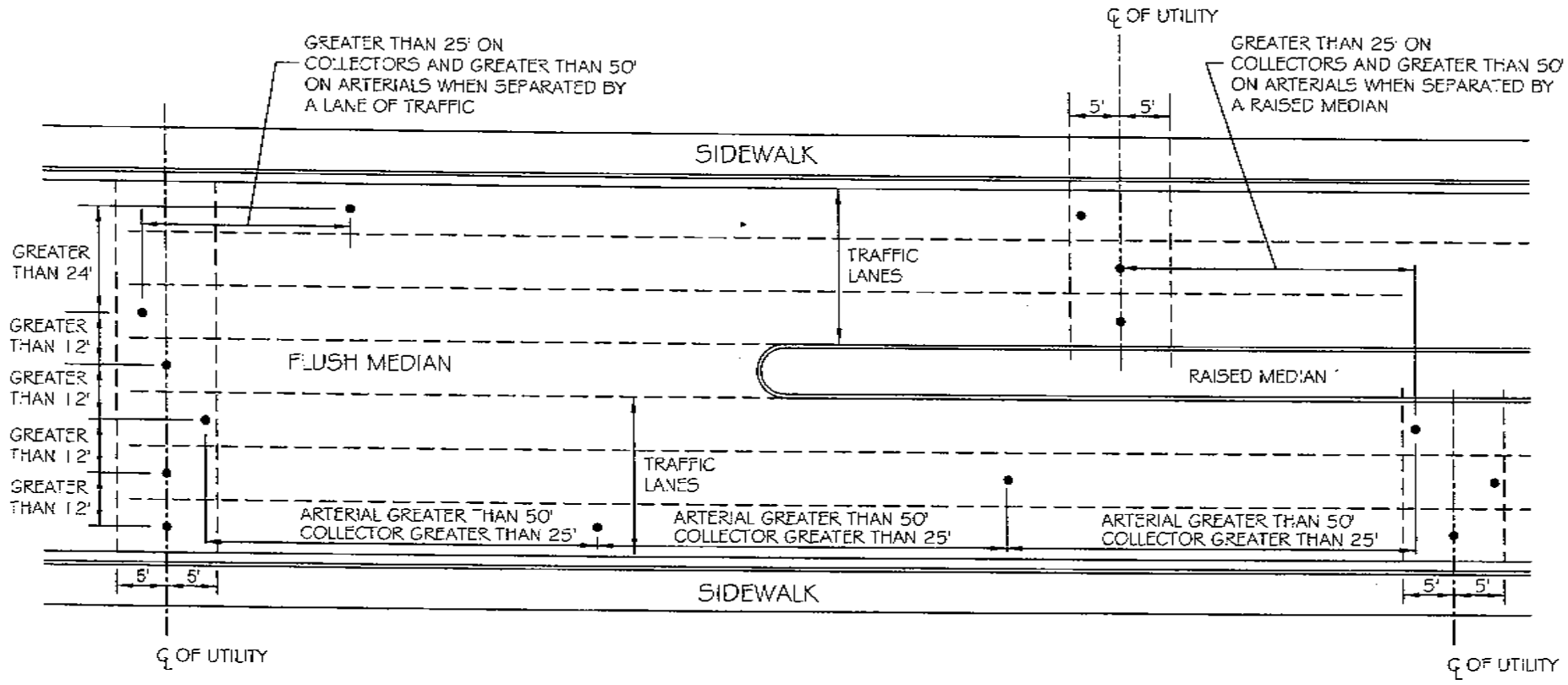

NOTES:

1. REFER TO THE REQUIREMENTS OF ENCROACHMENT PERMITS, STREET CUT PERMITS, AND THE FEE EXEMPTION POLICY.
2. DIMENSIONS FOR POTHOLE SPACING ARE MEASURED TO THE EDGES OF THE POTHOLES.

DETAIL NO. C-111 NTS	CITY OF CHANDLER STANDARD DETAIL	**MINIMUM POTHOLE SPACING FOR PAVEMENT RESTORATION FEE EXEMPTION**	APPROVED: _____ CITY ENGINEER DATE: 01-27-11	DETAIL NO. C-111 NTS

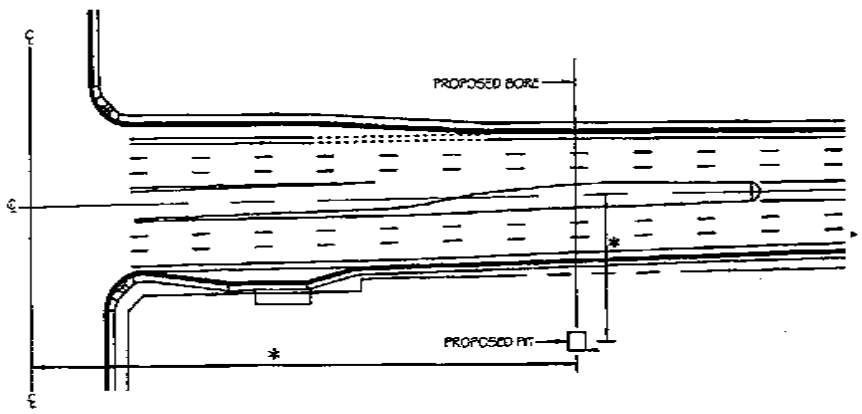

PLAN VIEW

NOT TO SCALE

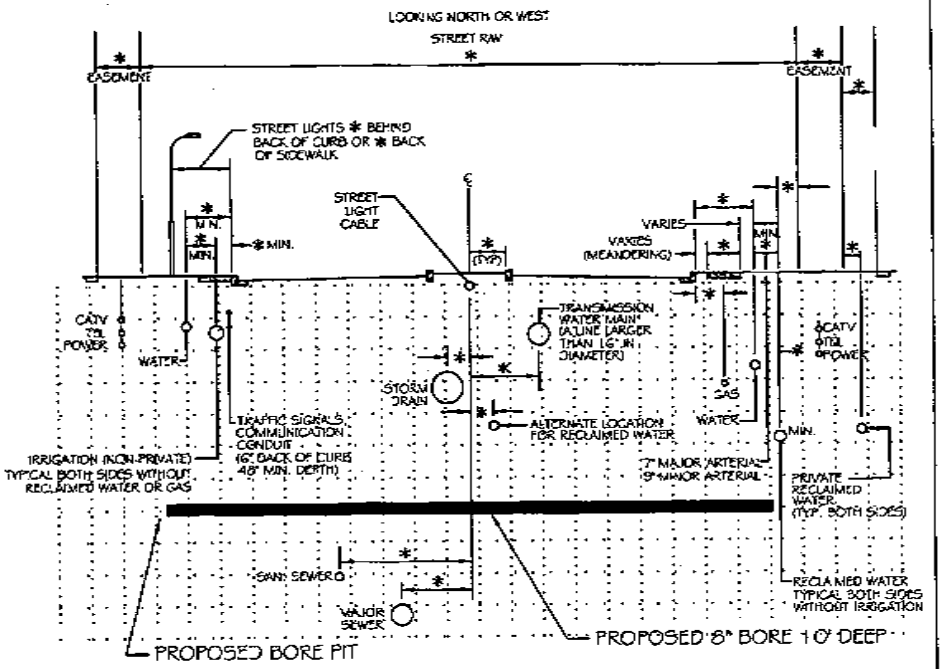

BORE PROFILE TYPICAL SECTION

NOTES:

1. * PROVIDE PROPOSED LOCATION OF BORE AND ALL UTILITIES WITH VERTICAL & HORIZONTAL DIMENSIONS, AS WELL AS DIMENSIONS OF FACILITIES TO BE CROSSED.
2. 12" BY 12" MAX. SIZE POTHOLES ALLOWED TO VERIFY UNKNOWN UTILITY LOCATION AND TO MONITOR BORES PASSING WITHIN 2' OF EXISTING UTILITIES. CORE DRILLING IS PREFERED.
3. 1' X 1' AND 2' X 2' POTHOLE PLATES ARE NOT PERMITTED. RESTORE POTHOLES PER MAG STD DTL 212.
4. ALL BORES TO BE SLEEVED IN SCHEDULE 40 PVC OR BETTER.
5. BACKFILL REQUIREMENTS OF PIT SHALL BE PER MAG SECTION 601
6. JURISDICTION SHALL BE NOTIFIED IF OBSTRUCTIONS ARE ENCOUNTERED.
7. GUIDED BORE REQUIRED IF LENGTH IS MORE THAN 45'.
8. THE CONTRACTOR SHALL MAKE ARRANGEMENTS WITH THE OWNER OF ANY DAMAGED FACILITY FOR ITS REPAIR OR REPLACEMENT. COST OF SUCH REPAIRS SHALL BE IN COMPLIANCE WITH M.A.G. OR SPECIAL AGREEMENTS.
9. REPLACE OR REPAIR ANY LANDSCAPING/SPRINKLER DAMAGED DURING THE COURSE OF THE WORK. PER MAG 107.9.
10. PERMISSION REQUIRED FROM THE CITY PRIOR TO REMOVING OR TRIMMING ANY LANDSCAPING.
11. 24" MIN. CLEARANCE SHALL BE PROVIDED BETWEEN BORE AND ALL EXISTING UTILITIES.

DETAIL NO. C-112 NTS	CITY OF CHANDLER STANDARD DETAIL	ENGINEERED UTILITY BORE	APPROVED: Lisa Hyde CITY ENGINEER DATE: 01/08/09	DETAIL NO. C-112 NTS

NOTES:

1. INSIDE DIMENSIONS: 10' WIDE, 8' DEEP, AND 6' HIGH.
2. CONCRETE BASE 4" THICK AT ENCLOSURE AND 6" THICK EXTENDED 6' BEYOND FRONT OF ENCLOSURE, BOTH WITH SUB-BASE OF 4". BASE MUST BE LEVEL WITH GRADE.
3. FOUR 4" X 5' STEEL PIPES SET 2' IN GROUND FILLED WITH CONCRETE, MOUNTED INSIDE ENCLOSURE. SIDE POLES PLACED 1/2 THE DISTANCE FROM FRONT TO BACK. BACK POLES PLACED 1/3 THE DISTANCE FROM SIDE TO SIDE. PIPES MAXIMUM DISTANCE OF 6" FROM THE WALL.
4. 9' WIDTH FOR EACH ADDITIONAL CONTAINER. ADD 2 ADDITIONAL PIPES AT REAR OF ENCLOSURE FOR EACH ADDITIONAL CONTAINER.
5. GATES TO BE MOUNTED ON SEPARATE POST NOT CONNECTED TO WALL.
6. GATES TO BE SOLID AND PAINTED TO MATCH ENCLOSURE, CUSTOM DESIGNS WILL BE APPROVED ON A CASE-BY-CASE BASIS.

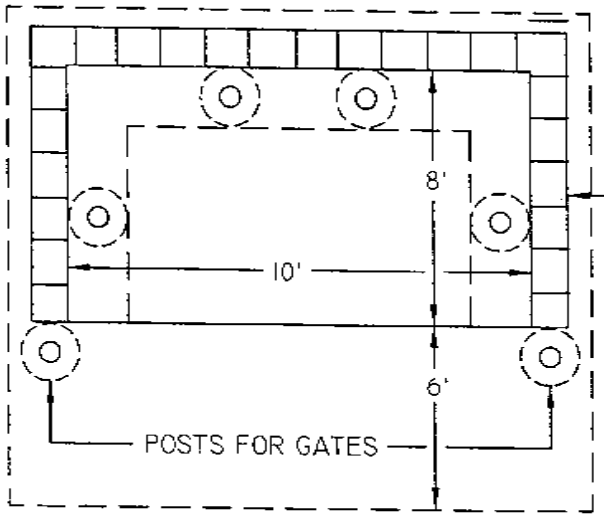

PLAN

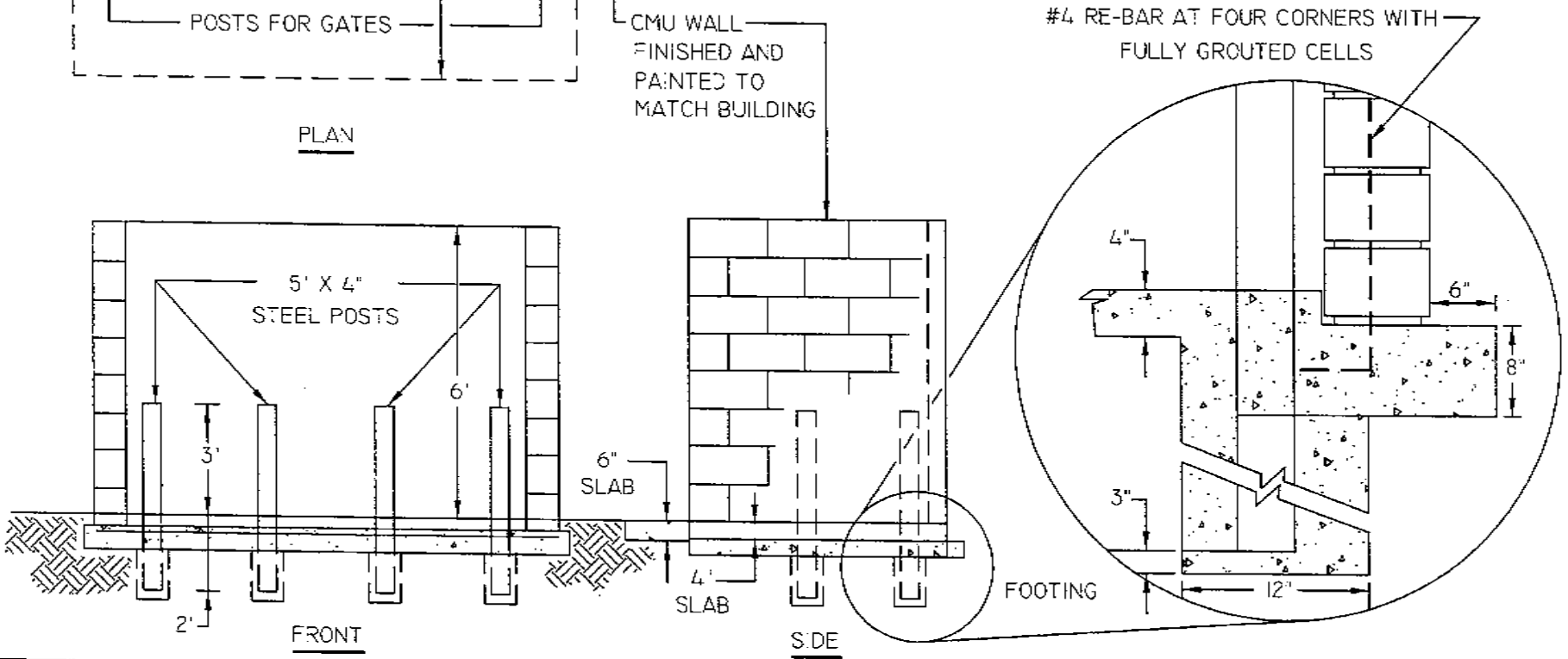

FRONT

SIDE

DETAIL NO. C-113 NTS	CITY OF CHANDLER STANDARD DETAIL	**TRASH RECEPTACLE ENCLOSURE**	APPROVED: _____ CITY ENGINEER DATE: 01-27-11	DETAIL NO. C-113 NTS

STREET SERIES

C-200 TO C-259

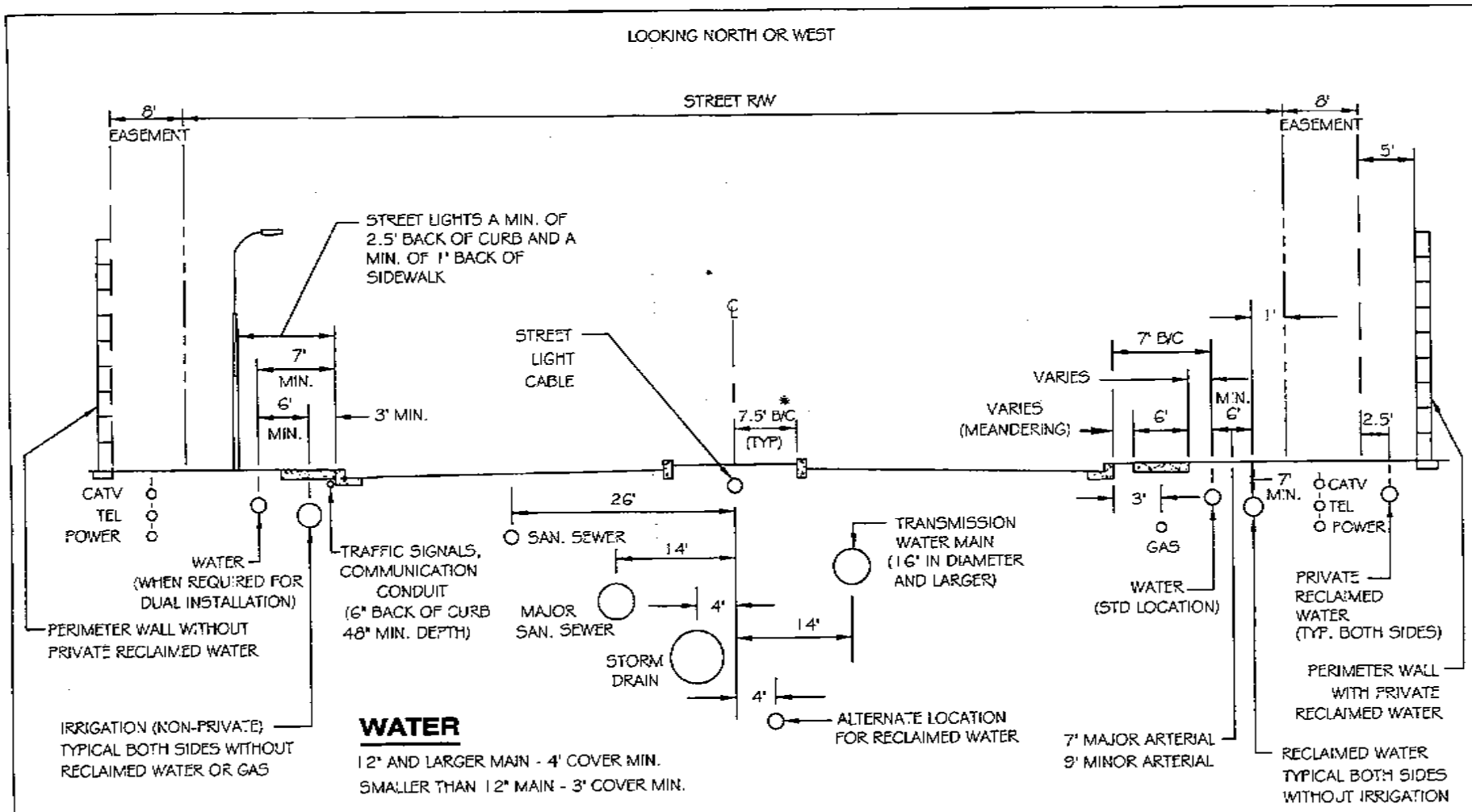

NOTES:

1. STREET LIGHTS SHALL BE LOCATED A MINIMUM OF 1' BACK OF SIDEWALK UNLESS OTHERWISE APPROVED.
2. PRIVATE RECLAIMED WATER LINES SHALL BE OUTSIDE OF PUBLIC RIGHT OF WAY.
* 3. 20 FOOT HALF MEDIAN FOR PHASED ARTERIALS. SEE C.O.C. STANDARD DETAIL NO. C-204.
4. PROVIDE IRRIGATION SLEEVE, MEDIAN TO MEDIAN, 2 NOMINAL SIZES LARGER THAN MAIN, CENTERED.

DETAIL NO. C-200 NTS	CITY OF CHANDLER STANDARD DETAIL	**STANDARD UTILITY LOCATIONS ARTERIAL STREETS**	APPROVED: _____ CITY ENGINEER DATE: 01/08/09	DETAIL NO. C-200 NTS

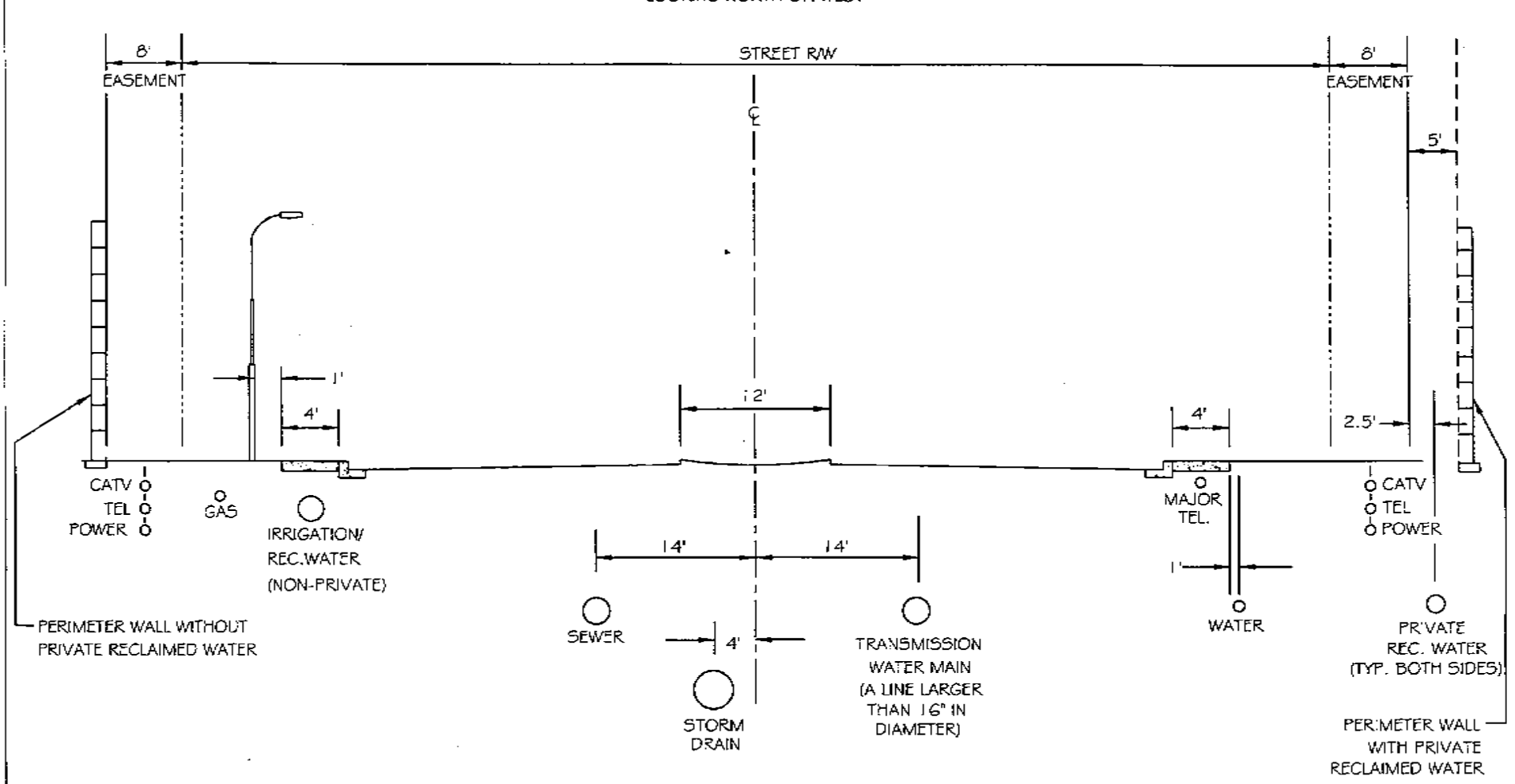

NOTE:

WHEN IN THE BEST INTEREST OF THE CITY, THE PUBLIC WORKS DIRECTOR, OR DESIGNEE, MAY WAIVE SIDEWALK ON ONE SIDE OF ROADWAY.

C-201 **REPLACES** **11**	CITY OF CHANDLER STANDARD DETAIL	**STANDARD UTILITY LOCATIONS** **COLLECTOR STREETS**	APPROVED: CITY ENGINEER DATE: 2/26/07	DETAIL NO. **C-201** NTS

LOOKING NORTH OR WEST

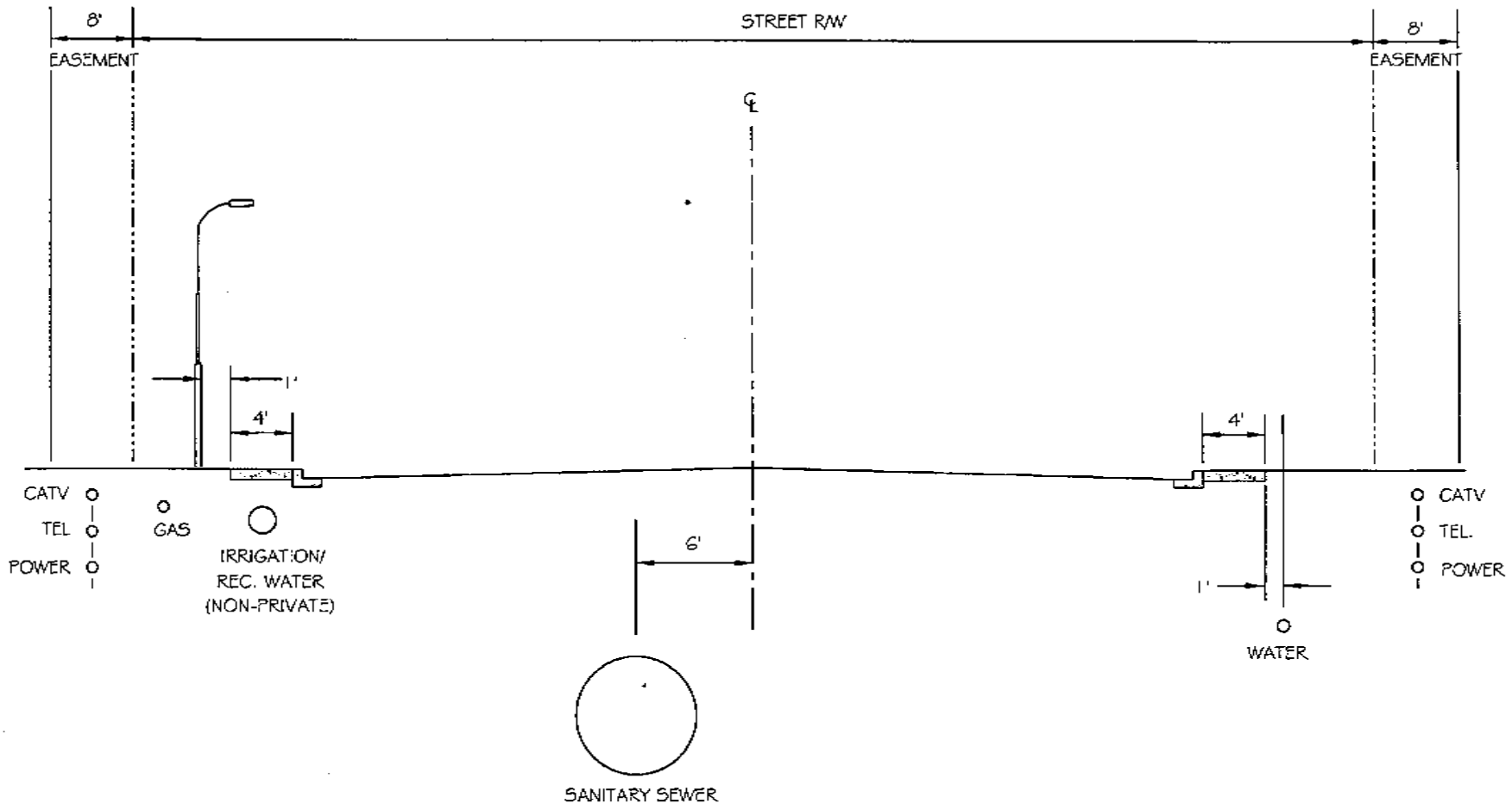

NOTE:

WHEN IN THE BEST INTEREST OF THE CITY, THE PUBLIC WORKS DIRECTOR, OR DESIGNEE, MAY WAIVE SIDEWALK ON ONE SIDE OF ROADWAY.

C-202 **REPLACES** **12**	CITY OF CHANDLER STANDARD DETAIL	**STANDARD UTILITY LOCATIONS** **LOCAL STREETS**	APPROVED: _____ CITY ENGINEER DATE: 2/26/07	DETAIL NO. **C-202** NTS

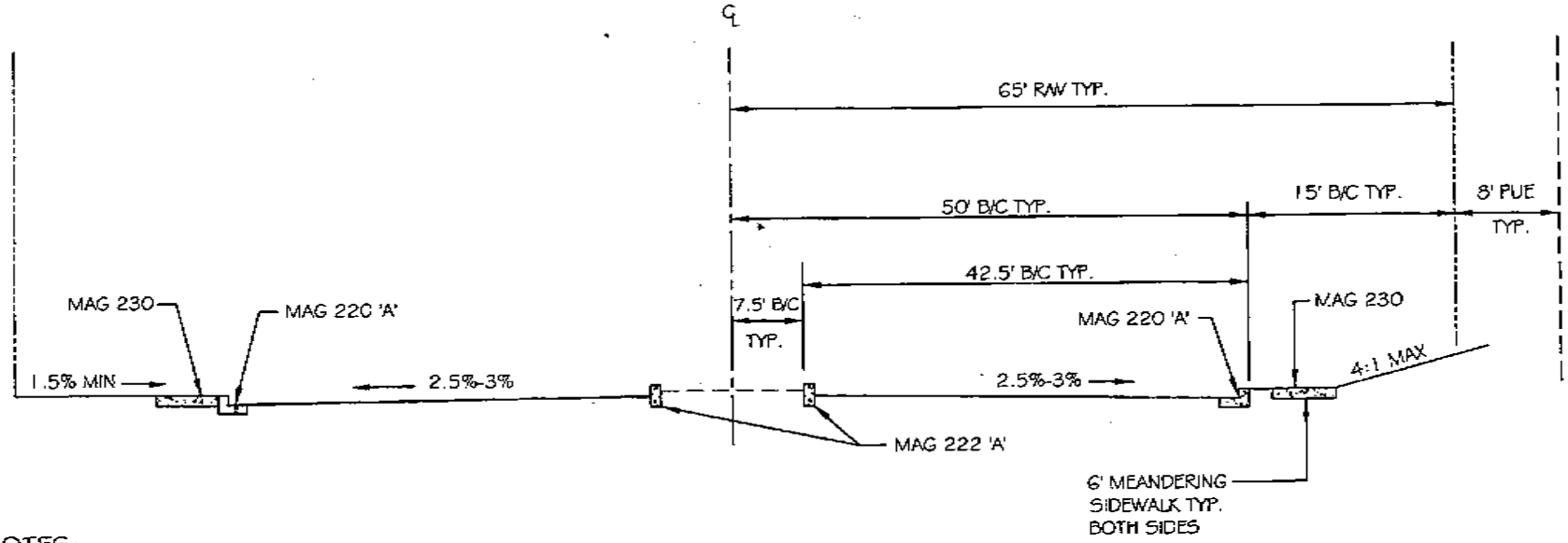

NOTES:

1. THE SUBGRADE SHALL BE PREPARED IN ACCORDANCE WITH MAG STANDARD SPECIFICATIONS, SEC. 301.
2. BASE COURSE:
   A. THE THICKNESS SHALL CONFORM TO COC STANDARD DETAIL C-239.
   B. ALL CONSTRUCTION AND MATERIALS SHALL CONFORM TO MAG STANDARD SPECIFICATIONS, SECS. 310 AND 702.
3. ASPHALTIC CONCRETE PAVEMENT:
   A. 3" THICK A19 OR A25 EVAC BASE COURSE WITH 2" OF A12.5 EVAC SURFACE COURSE.
   B. ALL CONSTRUCTION AND MATERIALS SHALL CONFORM TO EVAC AND MAG STANDARD SPECIFICATIONS, SECS. 321 AND 710.
4. ADDITIONAL RIGHT-OF-WAY SHALL BE PROVIDED WHERE NECESSARY TO ACCOMMODATE DOUBLE LEFT TURN LANES OR RIGHT TURN LANES WARRANTED BY TRAFFIC DEMANDS.
5. MEDIAN END SHALL BE RAMP PER COC STANDARD DETAIL C-225.
6. MEDIAN LANDSCAPE AREA SHALL BE PER DETAIL NO. L524 OF COC LANDSCAPE AND IRRIGATION DESIGN OF RIGHTS-OF-WAY, RETENTION BASINS, AND PARKS. (TDM #8) (MOUNDING IN MEDIAN NOT PERMITTED.)

DETAIL NO. C-203 NTS	CITY OF CHANDLER STANDARD DETAIL	**MAJOR ARTERIAL STREET TYPICAL CROSS SECTION**	APPROVED: _____ CITY ENGINEER DATE: 01/08/09	DETAIL NO. C-203 NTS

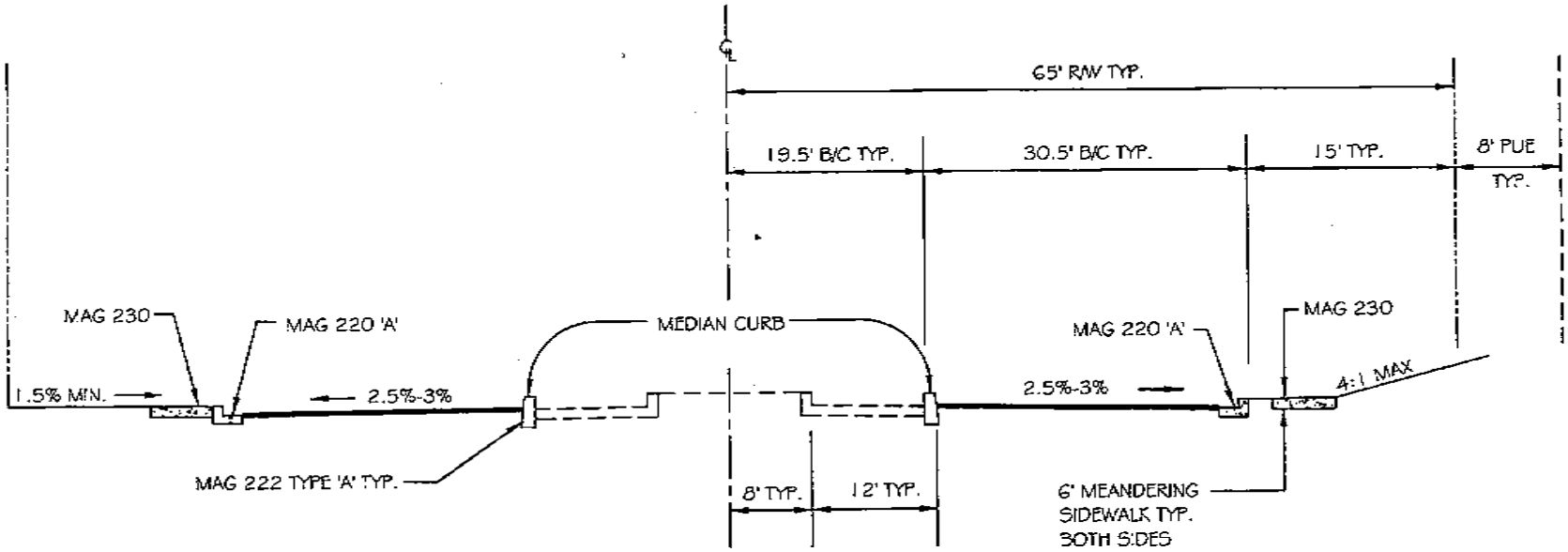

NOTES:

1. THE SUBGRADE SHALL BE PREPARED IN ACCORDANCE WITH MAG STANDARD SPECIFICATIONS, SEC. 301.
2. BASE COURSE:
   A. THE THICKNESS SHALL CONFORM TO COC STANDARD DETAIL C-239.
   B. ALL CONSTRUCTION AND MATERIALS SHALL CONFORM TO MAG STANDARD SPECIFICATIONS, SECS. 310 AND 702.
3. ASPHALTIC CONCRETE PAVEMENT:
   A. 3" THICK A19 OR A25 EVAC BASE COURSE WITH 2" OF A12.5 EVAC SURFACE COURSE.
   B. ALL CONSTRUCTION AND MATERIALS SHALL CONFORM TO EVAC AND MAG STANDARD SPECIFICATIONS, SECS. 321 AND 710.
4. ADDITIONAL RIGHT-OF-WAY SHALL BE PROVIDED WHERE NECESSARY TO ACCOMMODATE DOUBLE LEFT TURN LANES OR RIGHT TURN LANES WARRANTED BY TRAFFIC DEMANDS.
5. MEDIAN LANDSCAPE AREA SHALL BE PER DETAIL NO. LS24 OF COC LANDSCAPE AND IRRIGATION DESIGN OF RIGHTS-OF-WAY, RETENTION BASINS, AND PARKS. (TDM #8) (MOUNDING IN MEDIAN NOT PERMITTED.)
6. 0.2% MINIMUM LONGITUDINAL GRADE ALLOWED.

DETAIL NO. C-204 NTS	CITY OF CHANDLER STANDARD DETAIL	**PHASED MAJOR ARTERIAL STREET TYPICAL CROSS SECTION**	APPROVED: _____ CITY ENGINEER DATE: 01/08/09	DETAIL NO. C-204 NTS

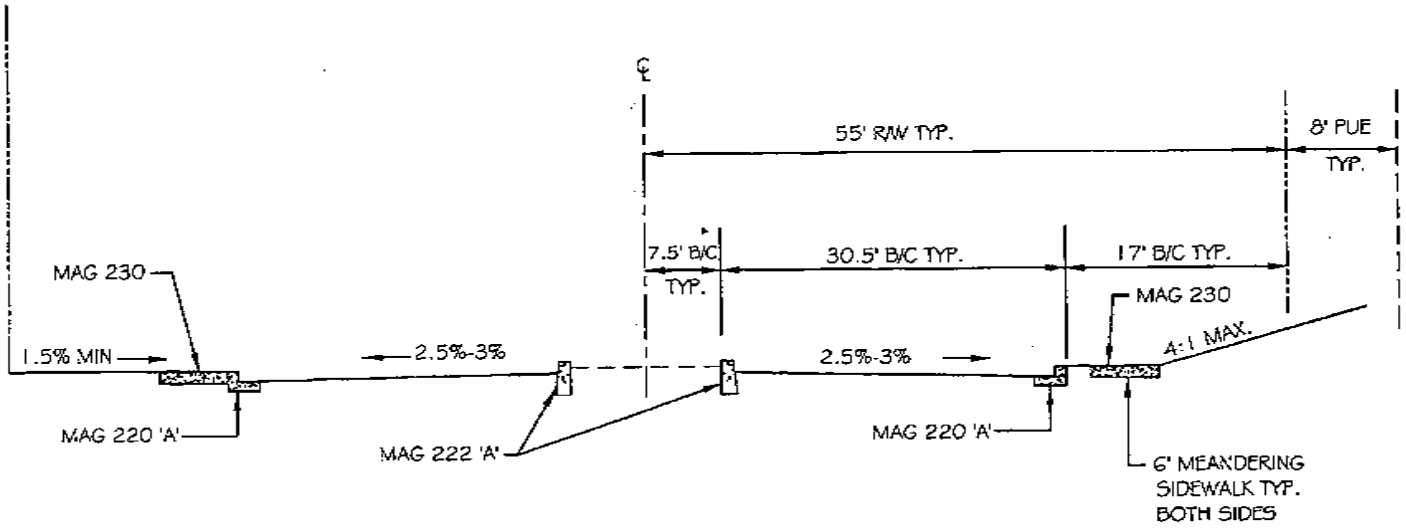

NOTES:

1. THE SUBGRADE SHALL BE PREPARED IN ACCORDANCE WITH MAG STANDARD SPECIFICATIONS, SEC. 301.
2. BASE COURSE:
   A. THE THICKNESS SHALL CONFORM TO COC STANDARD DETAIL C-239.
   B. ALL CONSTRUCTION AND MATERIALS SHALL CONFORM TO MAG STANDARD SPECIFICATIONS, SECS. 310 AND 702.
3. ASPHALTIC CONCRETE PAVEMENT:
   A. 3" THICK A19 OR A25 EVAC BASE COURSE WITH 2" OF A12.5 EVAC SURFACE COURSE.
   B. ALL CONSTRUCTION AND MATERIALS SHALL CONFORM TO EVAC AND MAG STANDARD SPECIFICATIONS, SECS. 321 AND 710.
4. ADDITIONAL RIGHT-OF-WAY SHALL BE PROVIDED WHERE NECESSARY TO ACCOMMODATE DOUBLE LEFT TURN LANES OR RIGHT TURN LANES WARRANTED BY TRAFFIC DEMANDS.
5. RAMP END OF MEDIAN PER COC STANDARD DETAIL C-225.
6. MEDIAN LANDSCAPE AREA SHALL BE PER DETAIL NO. LS24 OF COC LANDSCAPE AND IRRIGATION DESIGN OF RIGHTS-OF-WAY, RETENTION BASINS, AND PARKS. (TDM #8) (MOUNDING IN MEDIAN NOT PERMITTED.)
7. 0.2% MINIMUM LONGITUDINAL GRADE ALLOWED.

DETAIL NO. C-205 NTS	CITY OF CHANDLER STANDARD DETAIL	**MINOR ARTERIAL STREET TYPICAL CROSS SECTION**	APPROVED: _____ CITY ENGINEER DATE: 01/06/09	DETAIL NO. C-205 NTS

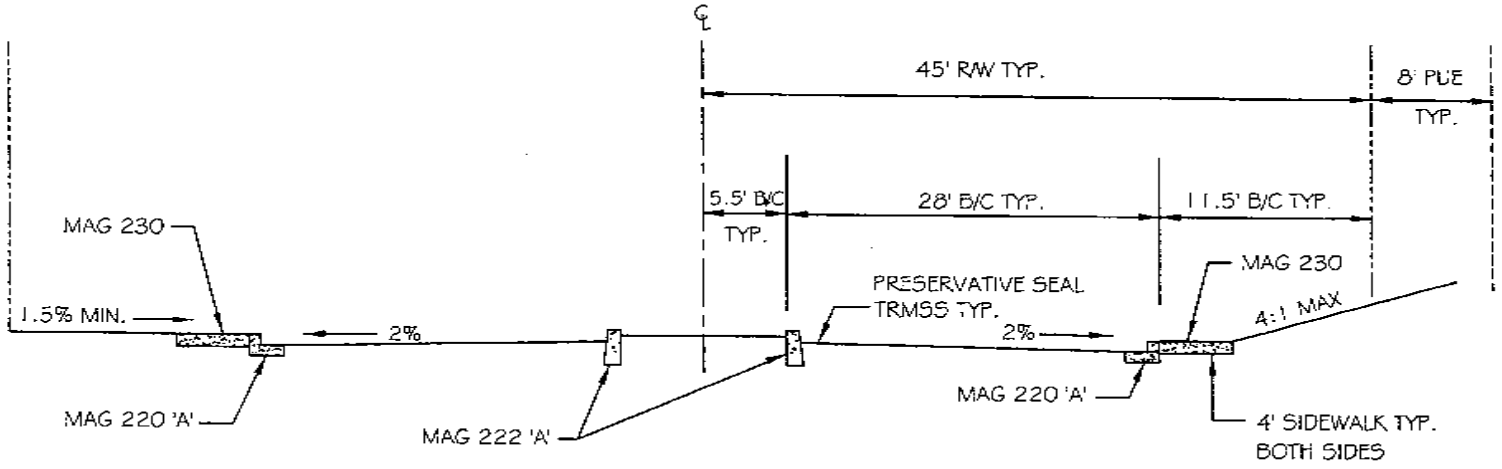

NOTES:

1. THE SUBGRADE SHALL BE PREPARED IN ACCORDANCE WITH MAG STANDARD SPECIFICATIONS, SEC. 301.
2. BASE COURSE:
   A. THE THICKNESS SHALL CONFORM TO COC STANDARD DETAIL C-240.
   B. ALL CONSTRUCTION AND MATERIALS SHALL CONFORM TO MAG STANDARD SPECIFICATIONS, SECS. 310 AND 702.
3. ASPHALTIC CONCRETE PAVEMENT:
   A. THE PAVEMENT SHALL BE 3" THICK A-12.5 EVAC ASPHALTIC CONCRETE.
   B. AREAS OF VISIBLE MIXTURE SEGREGATION SHALL BE MILLED TO A DEPTH OF 2" AND OVERLAID A MINIMUM OF THE LANE WIDTH.
   C. ALL CONSTRUCTION AND MATERIALS SHALL CONFORM TO EVAC AND MAG STANDARD SPECIFICATIONS, SECS. 321 AND 710.
   D. PRESERVATIVE SEAL COAT CONFORMING TO MAG SEC 334 AND SHALL BE TRMSS PER SEC 718. APPLICATION PER PAVING CONSTRUCTION NOTE.
4. WHEN IN THE BEST INTEREST OF THE CITY, THE PUBLIC WORKS DIRECTOR, OR DESIGNEE, MAY WAIVE SIDEWALK ON ONE SIDE OF ROADWAY.
5. RAMP END OF MEDIAN PER COC STANDARD DETAIL C-225.
6. MEDIAN LANDSCAPE AREA SHALL BE PER DETAIL NO. LS24 OF COC LANDSCAPE AND IRRIGATION DESIGN OF RIGHTS-OF-WAY, RETENTION BASINS, AND PARKS. (TDM #8) (MOUNDING IN MEDIAN NOT PERMITTED.)
7. 0.2% MINIMUM LONGITUDINAL GRADE ALLOWED.

DETAIL NO. C-206 NTS	CITY OF CHANDLER STANDARD DETAIL	**COLLECTOR STREET WITH MEDIAN TYPICAL CROSS SECTION**	APPROVED: _____ CITY ENGINEER DATE: 01-27-11	DETAIL NO. C-206 NTS

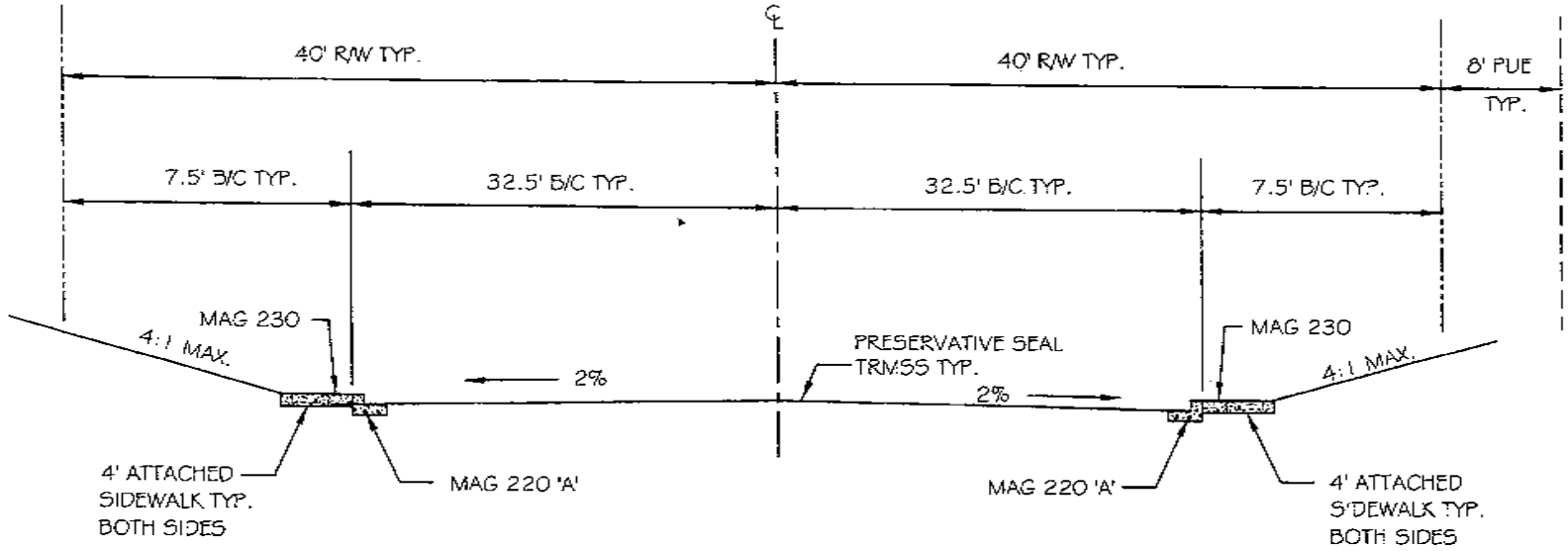

NOTES:

1. THE SUBGRADE SHALL BE PREPARED IN ACCORDANCE WITH MAG STANDARD SPECIFICATIONS, SEC. 301.
2. BASE COURSE:
   A. THE THICKNESS SHALL CONFORM TO COC STANDARD DETAIL C-240.
   B. ALL CONSTRUCTION AND MATERIALS SHALL CONFORM TO MAG STANDARD SPECIFICATIONS, SECS. 310 AND 702.
3. ASPHALTIC CONCRETE PAVEMENT:
   A. THE PAVEMENT SHALL BE 3" THICK A-12.5 EVAC ASPHALTIC CONCRETE.
   B. AREAS OF VISIBLE MIXTURE SEGREGATION SHALL BE MILLED TO A DEPTH OF 2" AND OVERLAID A MINIMUM OF THE LANE WIDTH.
   C. ALL CONSTRUCTION AND MATERIALS SHALL CONFORM TO EVAC AND MAG STANDARD SPECIFICATIONS, SECS. 321 AND 710.
   D. PRESERVATIVE SEAL COAT CONFORMING TO MAG SEC 334 AND SHALL BE TRMSS PER SEC 718. APPLICATION PER PAVING CONSTRUCTION NOTE.
4. WHEN IN THE BEST INTEREST OF THE CITY, THE PUBLIC WORKS DIRECTOR, OR DESIGNEE, MAY WAIVE SIDEWALK ON ONE OR BOTH SIDES OF ROADWAY.
5. 0.2% MINIMUM LONGITUDINAL GRADE ALLOWED.

DETAIL NO. C-208 NTS	CITY OF CHANDLER STANDARD DETAIL	**INDUSTRIAL COLLECTOR STREET TYPICAL CROSS SECTION**	APPROVED: _____ CITY ENGINEER DATE: 01-27-11	DETAIL NO. C-208 NTS

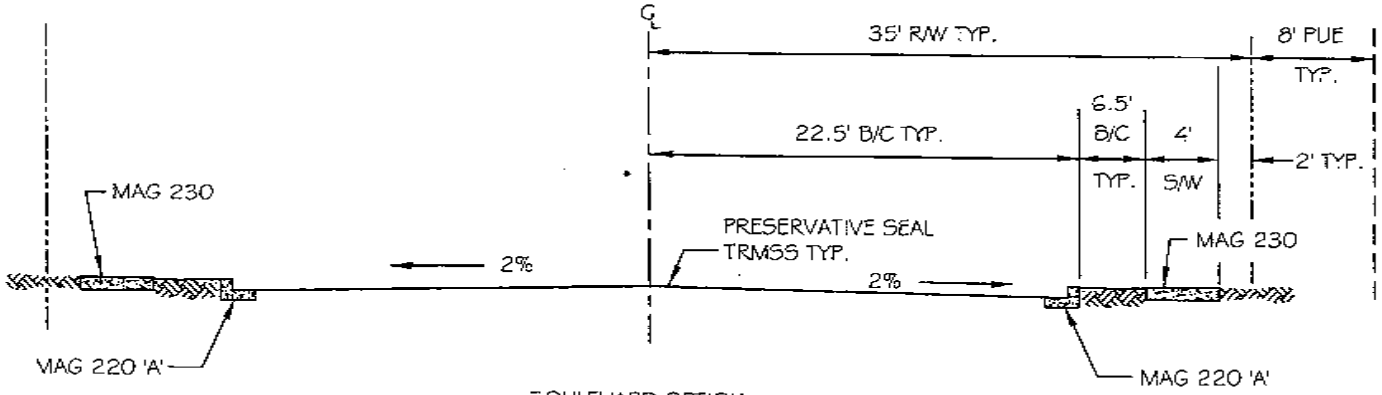

BOULEVARD OPTION

NOTES:

1. THE SUBGRADE SHALL BE PREPARED IN ACCORDANCE WITH MAG STANDARD SPECIFICATIONS, SEC. 301.
2. BASE COURSE:
   A. THE THICKNESS SHALL CONFORM TO COC STANDARD DETAIL C-241 FOR RESIDENTIAL AREAS AND COC STANDARD DETAIL C-240 FOR ALL OTHER AREAS.
   B. ALL CONSTRUCTION AND MATERIALS SHALL CONFORM TO MAG STANDARD SPECIFICATIONS, SECS. 310 AND 702.
3. ASPHALTIC CONCRETE PAVEMENT:
   A. THE PAVEMENT SHALL BE 3" THICK A-12.5 EVAC ASPHALTIC CONCRETE.
   B. AREAS OF VISIBLE MIXTURE SEGREGATION SHALL BE MILLED TO A DEPTH OF 2" AND OVERLAID A MINIMUM OF THE LANE WIDTH.
   C. ALL CONSTRUCTION AND MATERIALS SHALL CONFORM TO EVAC AND MAG STANDARD SPECIFICATIONS, SECS. 321 AND 710.
   D. PRESERVATIVE SEAL COAT CONFORMING TO MAG SEC 334 AND SHALL BE TRMSS PER SEC 718. APPLICATION PER PAVING CONSTRUCTION NOTE.
4. WHEN IN THE BEST INTEREST OF THE CITY, THE PUBLIC WORKS DIRECTOR, OR DESIGNEE, MAY WAIVE SIDEWALK ON ONE SIDE OF ROADWAY OR ON BOTH SIDES IN INDUSTRIAL AREAS.
5. 0.2% MINIMUM LONGITUDINAL GRADE ALLOWED.
6. DUCTILE IRON WATER LINE UNDER STREET; METERS BACK OF WALK.

DETAIL NO. C-209 NTS	CITY OF CHANDLER STANDARD DETAIL	**COLLECTOR BOULEVARD TYPICAL CROSS SECTION**	APPROVED: Kevin Hartke CITY ENGINEER DATE: 01-27-11	DETAIL NO. C-209 NTS

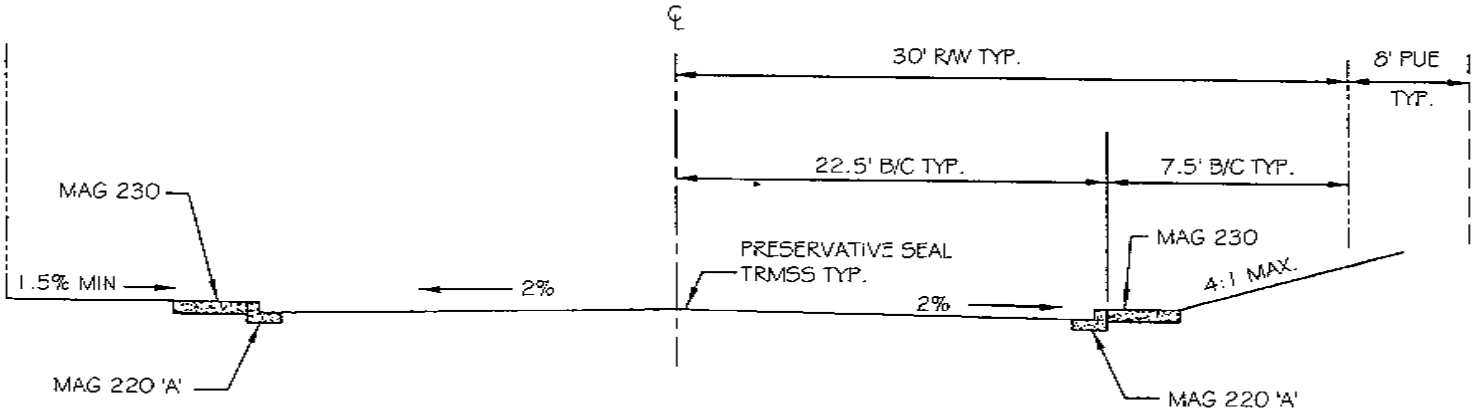

NOTES:

1. THE SUBGRADE SHALL BE PREPARED IN ACCORDANCE WITH MAG STANDARD SPECIFICATIONS, SEC. 301.
2. BASE COURSE:
   A. THE THICKNESS SHALL CONFORM TO COC STANDARD DETAIL C-241 FOR RESIDENTIAL AREAS AND COC STANDARD DETAIL C-240 FOR ALL OTHER AREAS.
   B. ALL CONSTRUCTION AND MATERIALS SHALL CONFORM TO MAG STANDARD SPECIFICATIONS, SECS. 310 AND 702.
3. ASPHALTIC CONCRETE PAVEMENT:
   A. THE PAVEMENT SHALL BE 3" THICK A-12.5 EVAC ASPHALTIC CONCRETE.
   B. AREAS OF VISIBLE MIXTURE SEGREGATION SHALL BE MILLED TO A DEPTH OF 2" AND OVERLAID A MINIMUM OF THE LANE WIDTH.
   C. ALL CONSTRUCTION AND MATERIALS SHALL CONFORM TO EVAC AND MAG STANDARD SPECIFICATIONS, SECS. 321 AND 710.
   D. PRESERVATIVE SEAL COAT CONFORMING TO MAG SEC 334 AND SHALL BE TRMSS PER SEC 718. APPLICATION PER PAVING CONSTRUCTION NOTE.
4. WHEN IN THE BEST INTEREST OF THE CITY, THE PUBLIC WORKS DIRECTOR, OR DESIGNEE, MAY WAIVE SIDEWALK ON ONE SIDE OF ROADWAY OR ON BOTH SIDES IN INDUSTRIAL AREAS.
5. 0.2% MINIMUM LONGITUDINAL GRADE ALLOWED.

DETAIL NO. C-210 NTS	CITY OF CHANDLER STANDARD DETAIL	**COLLECTOR STREET TYPICAL CROSS SECTION**	APPROVED: _____ CITY ENGINEER DATE: 01-27-11	DETAIL NO. C-210 NTS

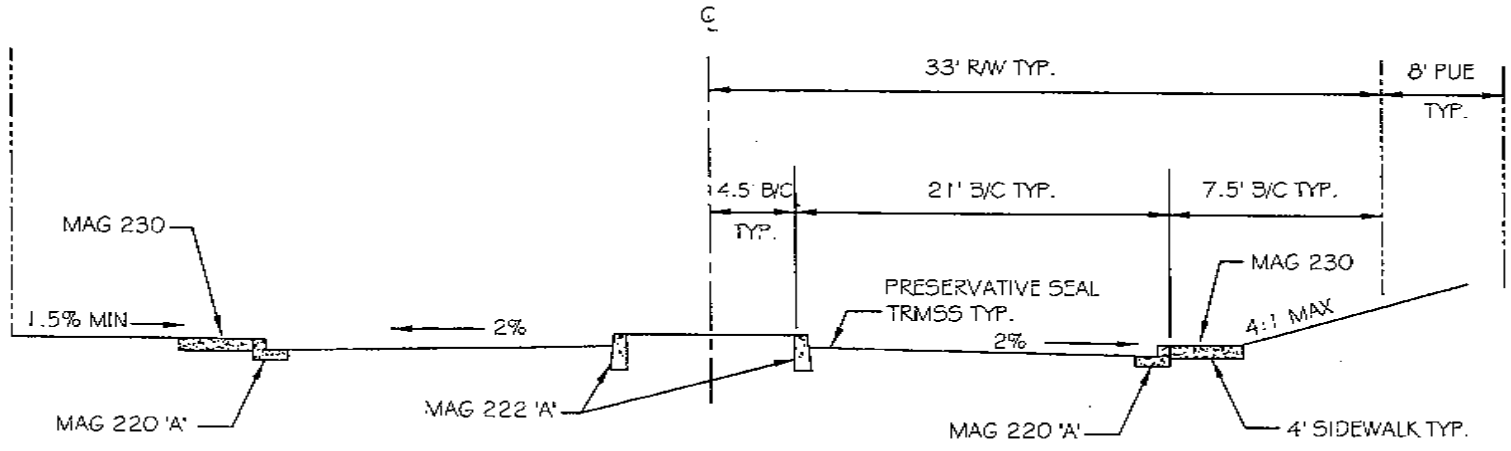

NOTES:

1. THE SUBGRADE SHALL BE PREPARED IN ACCORDANCE WITH MAG STANDARD SPECIFICATIONS, SEC. 301.
2. BASE COURSE:
   A. THE THICKNESS SHALL CONFORM TO COC STANDARD DETAIL C-242.
   B. ALL CONSTRUCTION AND MATERIALS SHALL CONFORM TO MAG STANDARD SPECIFICATIONS, SECS. 310 AND 702.
3. ASPHALTIC CONCRETE PAVEMENT:
   A. THE PAVEMENT SHALL BE 3" THICK R-12.5 EVAC ASPHALTIC CONCRETE.
   B. ALL CONSTRUCTION AND MATERIALS SHALL CONFORM TO MAG STANDARD SPECIFICATIONS, SECS. 321 AND 710.
   C. PRESERVATIVE SEAL COAT CONFORMING TO MAG SEC 334 AND SHALL BE TRMSS PER SEC 718. APPLICATION PER PAVING CONSTRUCTION NOTE.
4. WHEN IN THE BEST INTEREST OF THE CITY, THE PUBLIC WORKS DIRECTOR, OR DESIGNEE, MAY WAIVE SIDEWALK ON ONE SIDE OF ROADWAY.
5. NO PARKING IS PERMITTED.
6. RAMP END OF MEDIAN PER COC STANDARD DETAIL C-225.
7. MEDIAN LANDSCAPE AREA SHALL BE PER DETAIL NO. LS24 OF COC LANDSCAPE AND IRRIGATION DESIGN OF RIGHTS-OF-WAY, RETENTION BASINS, AND PARKS. (TDM #8) (MOUNDING IN MEDIAN NOT PERMITTED.)
8. 0.2% MINIMUM LONGITUDINAL GRADE ALLOWED.

DETAIL NO. C-211 NTS	CITY OF CHANDLER STANDARD DETAIL	**LOCAL STREET WITH MEDIAN TYPICAL CROSS SECTION**	APPROVED: _____ CITY ENGINEER DATE: 01-27-11	DETAIL NO. C-211 NTS

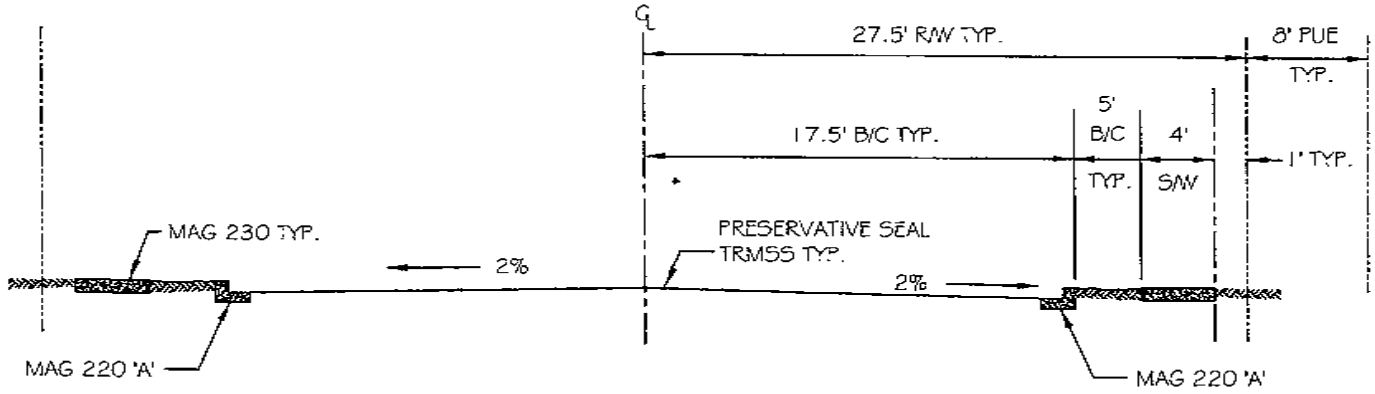

NOTES:

1. THE SUBGRADE SHALL BE PREPARED IN ACCORDANCE WITH MAG STANDARD SPECIFICATIONS, SEC. 301.
2. BASE COURSE:
   A. THE THICKNESS SHALL CONFORM TO COC STANDARD DETAIL C-241 FOR RESIDENTIAL AREAS AND COC STANDARD DETAIL C-240 FOR ALL OTHER AREAS.
   B. ALL CONSTRUCTION AND MATERIALS SHALL CONFORM TO MAG STANDARD SPECIFICATIONS, SECS. 310 AND 702.
3. ASPHALTIC CONCRETE PAVEMENT:
   A. THE PAVEMENT SHALL BE 3' THICK R-12.5 EVAC ASPHALTIC CONCRETE.
   B. ALL CONSTRUCTION AND MATERIALS SHALL CONFORM TO MAG STANDARD SPECIFICATIONS, SECS. 321 AND 710.
   C. PRESERVATIVE SEAL COAT CONFORMING TO MAG SEC 334 AND SHALL BE TRMSS PER SEC 718. APPLICATION PER PAVING CONSTRUCTION NOTE.
4. WHEN IN THE BEST INTEREST OF THE CITY, THE PUBLIC WORKS DIRECTOR, OR DESIGNEE, MAY WAIVE SIDEWALK ON ONE OR BOTH SIDES OF ROADWAY.
5. 0.2% MINIMUM LONGITUDINAL GRADE ALLOWED.
6. ALLOWED FOR MULTI-FAMILY DEVELOPMENTS, OR SINGLE FAMILY RESIDENTIAL DEVELOPMENTS WITH FRONTAGES LESS THAN 65'.
7. DUCTILE IRON WATER LINE UNDER STREET; METERS BACK OF WALK.

DETAIL NO. C-212 NTS	CITY OF CHANDLER STANDARD DETAIL	**LOCAL BOULEVARD WITH FRONTAGES LESS THAN 65' TYPICAL CROSS SECTION**	APPROVED: _____ CITY ENGINEER DATE: 01-27-11	DETAIL NO. C-212 NTS

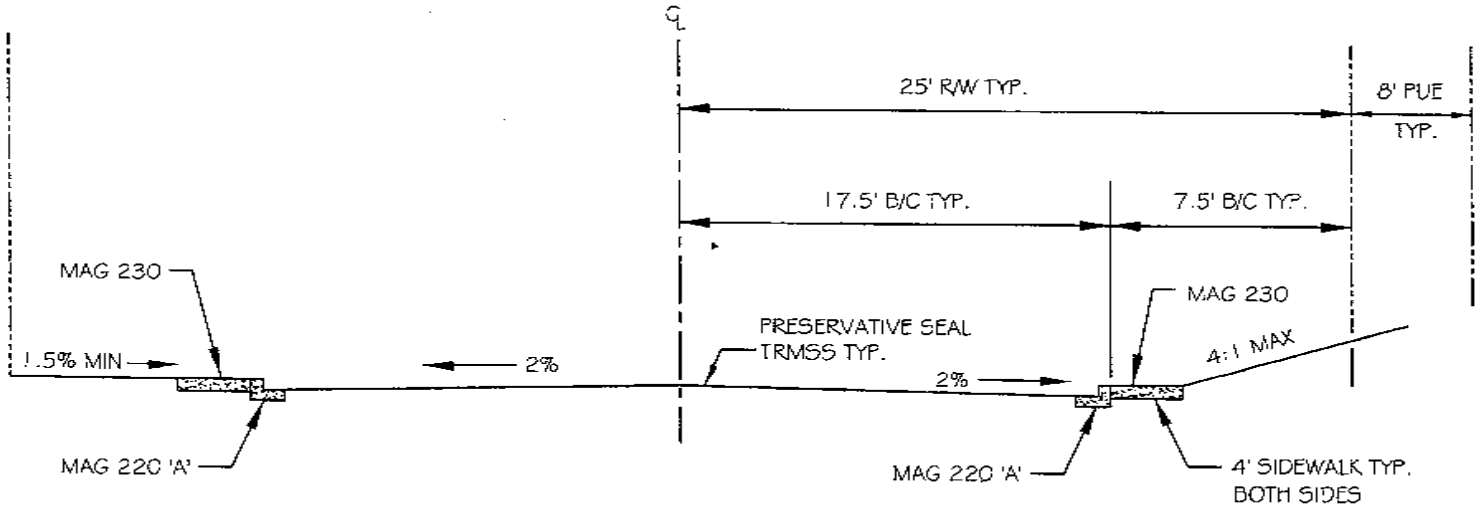

NOTES:

1. THE SUBGRADE SHALL BE PREPARED IN ACCORDANCE WITH MAG STANDARD SPECIFICATIONS, SEC. 301.
2. BASE COURSE:
   A. THE THICKNESS SHALL CONFORM TO COC STANDARD DETAIL C-242.
   B. ALL CONSTRUCTION AND MATERIALS SHALL CONFORM TO MAG STANDARD SPECIFICATIONS, SECS. 310 AND 702.
3. ASPHALTIC CONCRETE PAVEMENT:
   A. THE PAVEMENT SHALL BE 3" THICK R-12.5 EVAC ASPHALTIC CONCRETE.
   B. ALL CONSTRUCTION AND MATERIALS SHALL CONFORM TO MAG STANDARD SPECIFICATIONS, SECS. 321 AND 710.
   C. PRESERVATIVE SEAL COAT CONFORMING TO MAG SEC 334 AND SHALL BE TRMSS PER SEC 718. APPLICATION PER PAVING CONSTRUCTION NOTE.
4. WHEN IN THE BEST INTEREST OF THE CITY, THE PUBLIC WORKS DIRECTOR, OR DESIGNEE, MAY WAIVE SIDEWALK ON ONE SIDE OF ROADWAY.
5. 0.2% MINIMUM LONGITUDINAL GRADE ALLOWED.
6. IF ALL ABUTTING LOT FRONTAGES EXCEED 65', STREET WIDTH MAY BE REDUCED TO 32' (B.C.) AND ROW WIDTH MAY BE REDUCED TO 42'.
7. IF ALL ABUTTING LOT FRONTAGES EXCEED 90', STREET WIDTH MAY BE REDUCED TO 29' (B.C.) AND ROW WIDTH MAY BE REDUCED TO 42'.

DETAIL NO. C-213 NTS	CITY OF CHANDLER STANDARD DETAIL	**LOCAL STREET TYPICAL CROSS SECTION**	APPROVED: _____ CITY ENGINEER DATE: 01-27-11	DETAIL NO. C-213 NTS

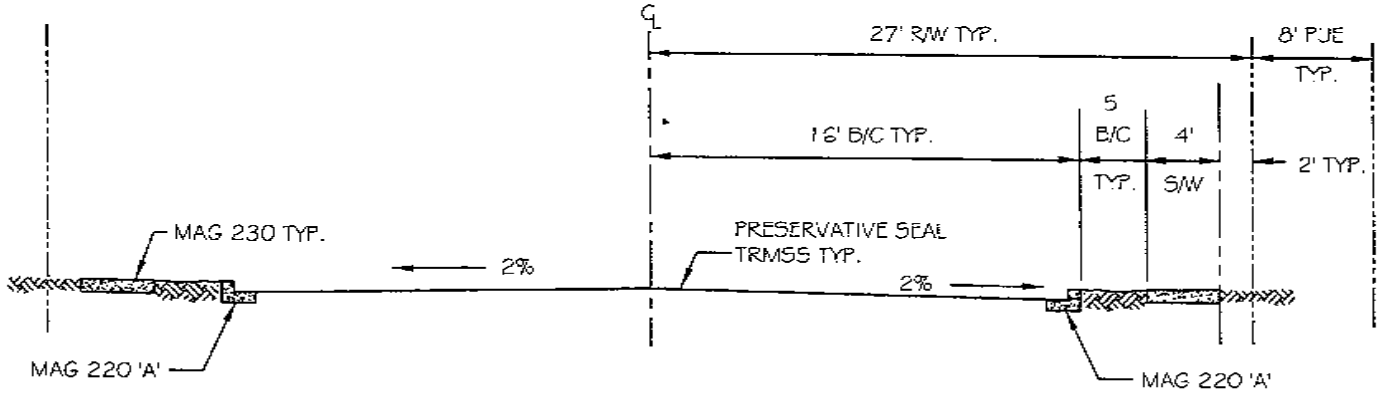

NOTES:

1. THE SUBGRADE SHALL BE PREPARED IN ACCORDANCE WITH MAG STANDARD SPECIFICATIONS, SEC. 301.
2. BASE COURSE:
   A. THE THICKNESS SHALL CONFORM TO COC STANDARD DETAIL C-241 FOR RESIDENTIAL AREAS AND COC STANDARD DETAIL C-240 FOR ALL OTHER AREAS.
   B. ALL CONSTRUCTION AND MATERIALS SHALL CONFORM TO MAG STANDARD SPECIFICATIONS, SECS. 310 AND 702.
3. ASPHALTIC CONCRETE PAVEMENT:
   A. THE PAVEMENT SHALL BE 3" THICK R-12.5 EVAC ASPHALTIC CONCRETE.
   B. ALL CONSTRUCTION AND MATERIALS SHALL CONFORM TO MAG STANDARD SPECIFICATIONS, SECS. 321 AND 710.
   C. PRESERVATIVE SEAL COAT CONFORMING TO MAG SEC 334 AND SHALL BE TRMSS PER SEC 718. APPLICATION PER PAVING CONSTRUCTION NOTE.
4. WHEN IN THE BEST INTEREST OF THE CITY, THE PUBLIC WORKS DIRECTOR, OR DESIGNEE, MAY WAIVE SIDEWALK ON ONE OR BOTH SIDES OF ROADWAY.
5. 0.2% MINIMUM LONGITUDINAL GRADE ALLOWED.
6. ALLOWED ONLY FOR SINGLE FAMILY RESIDENTIAL DEVELOPMENTS WITH FRONTAGES OF 65' TO 90.
7. DUCTILE IRON WATER LINE UNDER STREET; METERS BACK OF WALK.

DETAIL NO. C-221 NTS	CITY OF CHANDLER STANDARD DETAIL	**LOCAL BOULEVARD WITH FRONTAGES OF 65' TO 90' TYPICAL CROSS SECTION**	APPROVED: _____ CITY ENGINEER DATE: 01-27-11	DETAIL NO. C-221 NTS

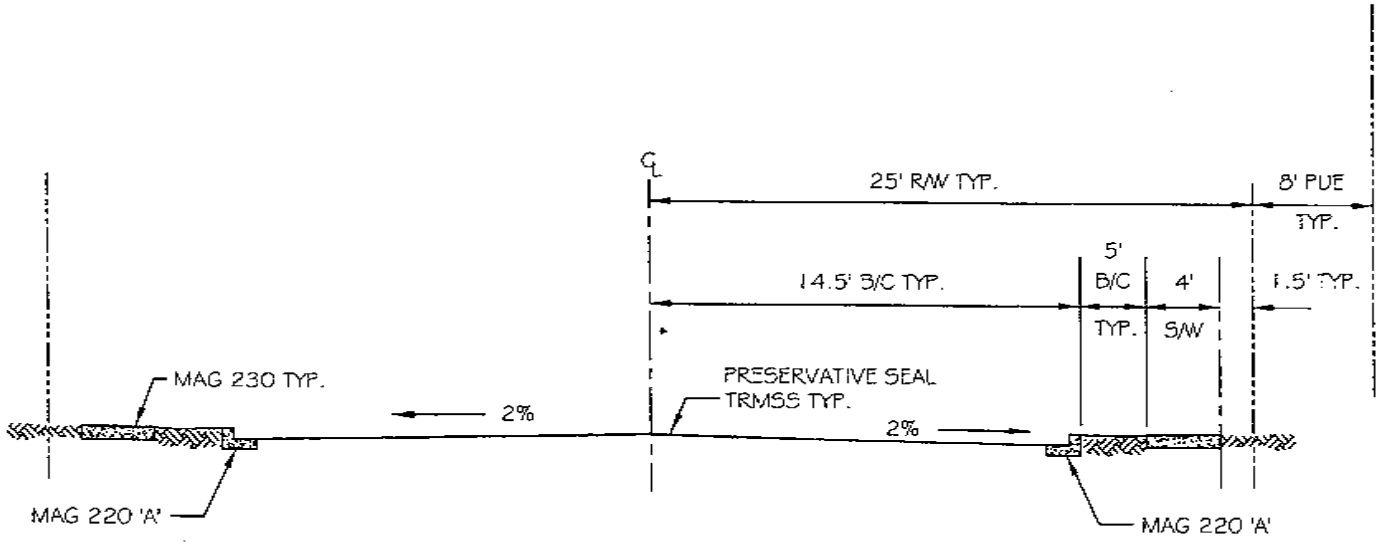

NOTES:

1. THE SUBGRADE SHALL BE PREPARED IN ACCORDANCE WITH MAG STANDARD SPECIFICATIONS, SEC. 301.
2. BASE COURSE:
   A. THE THICKNESS SHALL CONFORM TO COC STANDARD DETAIL C-241 FOR RESIDENTIAL AREAS AND COC STANDARD DETAIL C-240 FOR ALL OTHER AREAS.
   B. ALL CONSTRUCTION AND MATERIALS SHALL CONFORM TO MAG STANDARD SPECIFICATIONS, SECS. 310 AND 702.
3. ASPHALTIC CONCRETE PAVEMENT:
   A. THE PAVEMENT SHALL BE 3" THICK R-12.5 EVAC ASPHALTIC CONCRETE.
   B. ALL CONSTRUCTION AND MATERIALS SHALL CONFORM TO MAG STANDARD SPECIFICATIONS, SECS. 321 AND 710.
   C. PRESERVATIVE SEAL COAT CONFORMING TO MAG SEC 334 AND SHALL BE TRMSS PER SEC 718. APPLICATION PER PAVING CONSTRUCTION NOTE.
4. WHEN IN THE BEST INTEREST OF THE CITY, THE PUBLIC WORKS DIRECTOR, OR DESIGNEE, MAY WAIVE SIDEWALK ON ONE OR BOTH SIDES OF ROADWAY.
5. 0.2% MINIMUM LONGITUDINAL GRADE ALLOWED.
6. ALLOWED ONLY FOR SINGLE FAMILY RESIDENTIAL DEVELOPMENTS WITH FRONTAGES GREATER THAN 90'.
7. DUCTILE IRON WATER LINE UNDER STREET; METERS BACK OF WALK.

DETAIL NO. C-222 NTS	CITY OF CHANDLER STANDARD DETAIL	**LOCAL BOULEVARD WITH FRONTAGES GREATER THAN 90' TYPICAL CROSS SECTION**	APPROVED: CITY ENGINEER DATE: 01-27-11	DETAIL NO. C-222 NTS

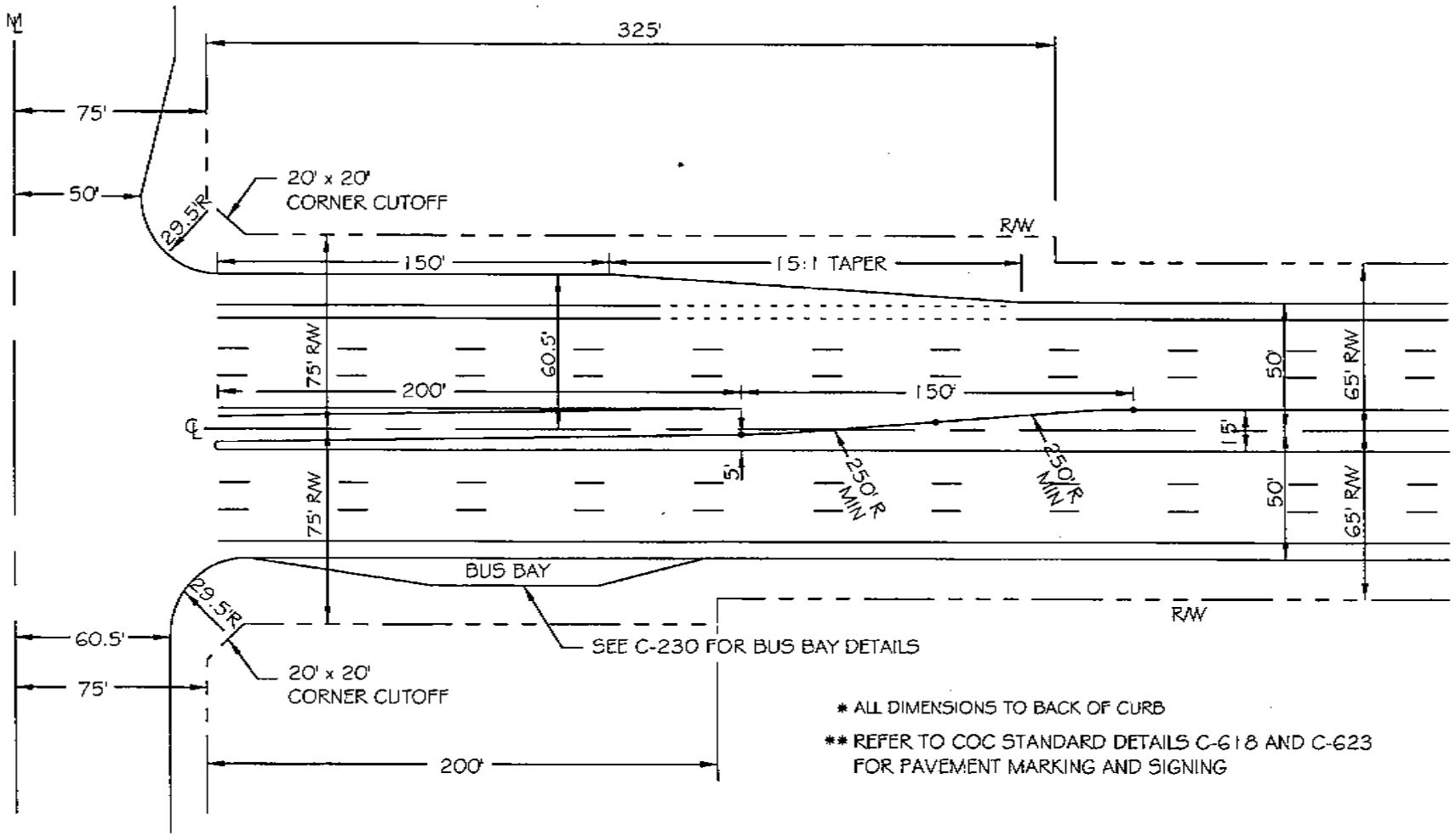

DETAIL NO. C-223 NTS	CITY OF CHANDLER STANDARD DETAIL	**STANDARD MAJOR ARTERIAL/MAJOR ARTERIAL INTERSECTION RIGHT-OF-WAY, AND STREET DIMENSIONS**	APPROVED: CITY ENGINEER DATE: 2/26/07	DETAIL NO. C-223 PAGE 1 OF 2

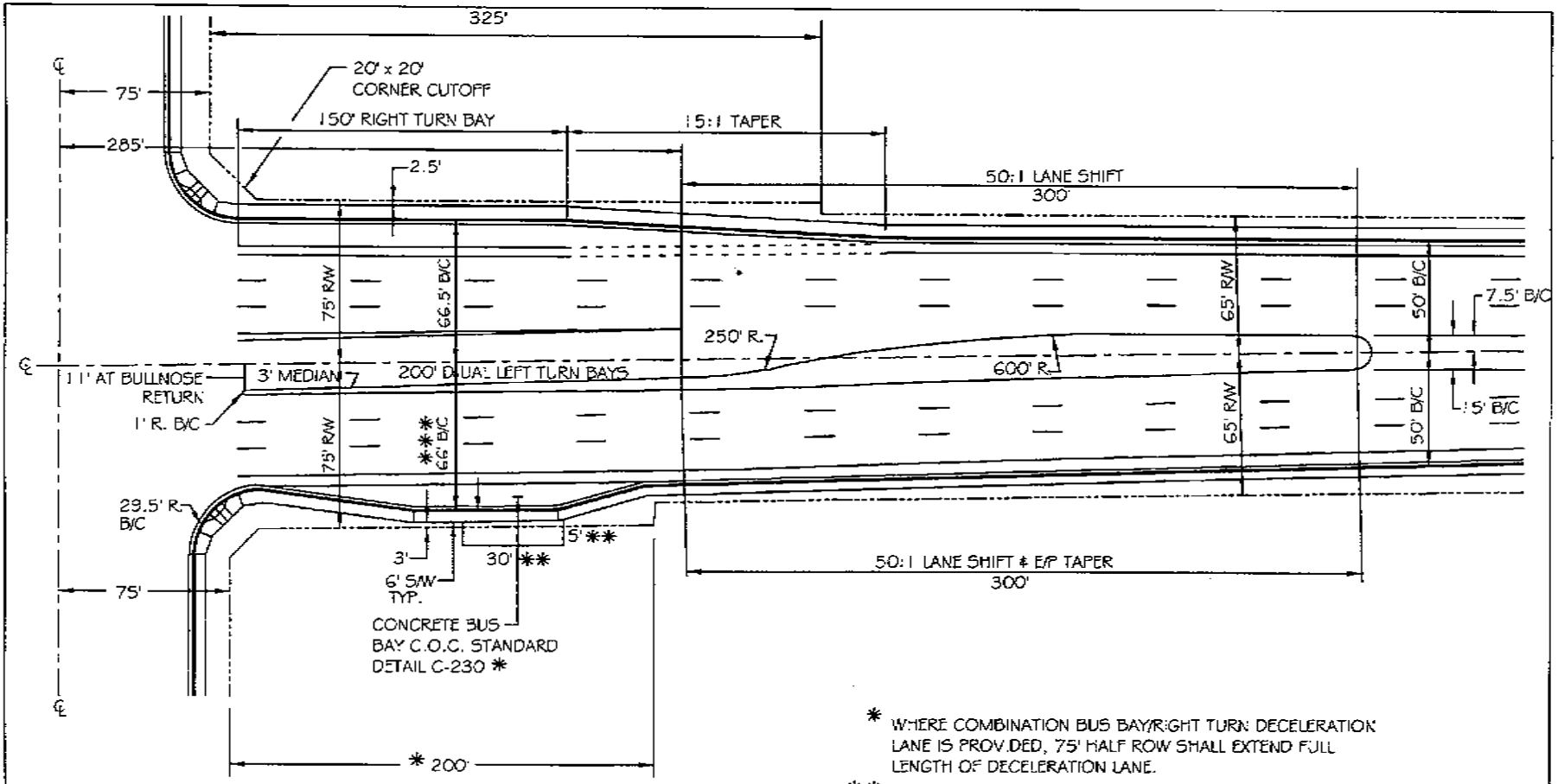

* WHERE COMBINATION BUS BAY/RIGHT TURN DECELERATION LANE IS PROVIDED, 75' HALF ROW SHALL EXTEND FULL LENGTH OF DECELERATION LANE.

** ADDITIONAL 5' X 30' EASEMENT SHALL BE REQUIRED OF DEVELOPER FOR BUS SHELTER PAD.

*** 66.5' B/C AND 2.5' FOR INTEGRAL BUS BAY/DECELERATION LANE, SEE C.O.C. STANDARD DETAIL C-231.

**** REFER TO COC STANDARD DETAIL C-619 AND C-623 FOR PAVEMENT MARKING AND SIGNING.

NOTES:

50 : 1 TAPERS FOR REDIRECTION OF THROUGH LANES

15 : 1 TAPERS FOR RIGHT TURN BAY APPROACHES

DETAIL NO. C-223 PAGE 2 OF 2	CITY OF CHANDLER STANDARD DETAIL	**ULTIMATE MAJOR ARTERIAL/MAJOR ARTERIAL INTERSECTION RIGHT-OF-WAY, STREET DIMENSIONS**	APPROVED: _____ CITY ENGINEER DATE: June 12, 08	DETAIL NO. C-223 PAGE 2 OF 2

* REFER TO COC DETAIL C-620 FOR PAVEMENT MARKING AND SIGNING

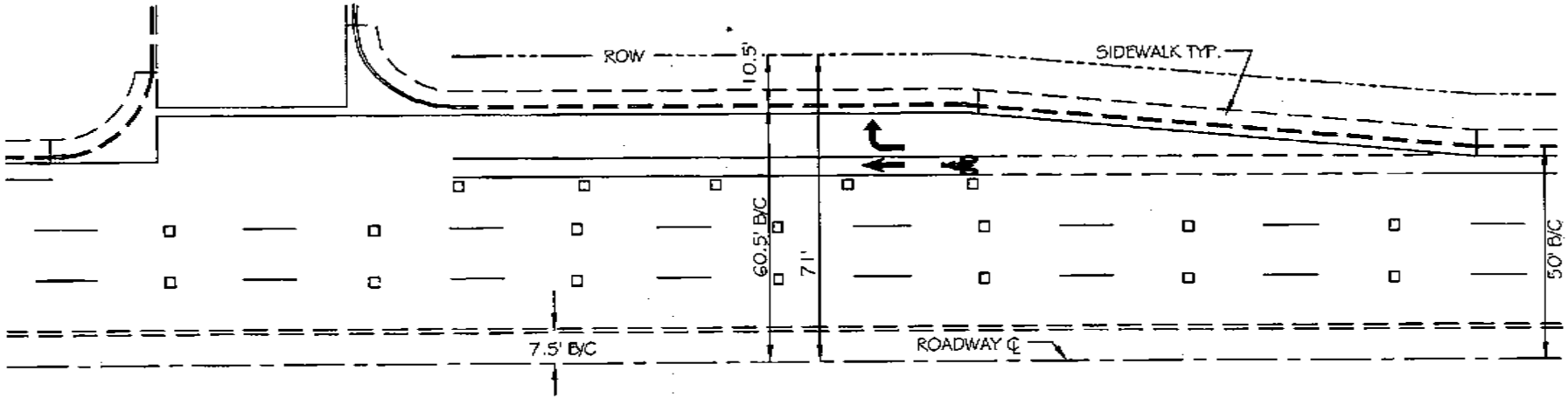

DETAIL NO. C-224 NTS	CITY OF CHANDLER STANDARD DETAIL	**MAJOR ARTERIAL DECELERATION LANE**	APPROVED: _____ CITY ENGINEER DATE: 01/08/09	DETAIL NO. C-224 NTS

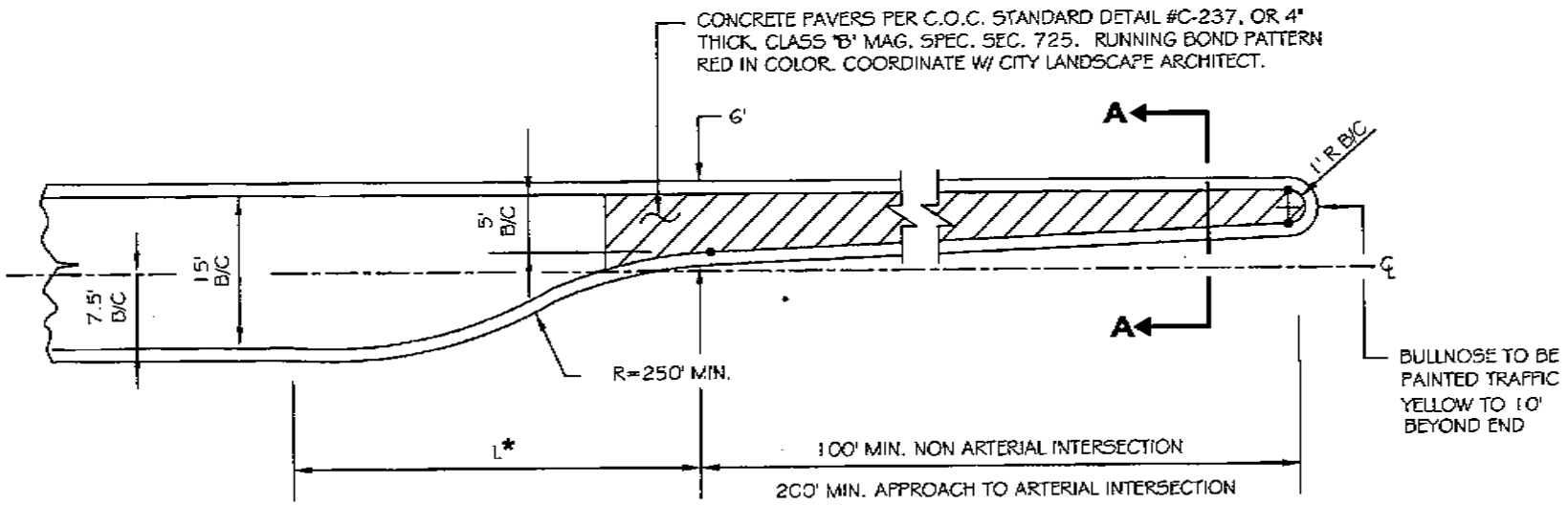

* TAPER LENGTH 'L' = $\frac{WS}{3}$, WHERE 'W' IS TURN LANE WIDTH IN FEET AND 'S' IS DESIGN SPEED IN MPH. MINIMUM 'L' = 100'

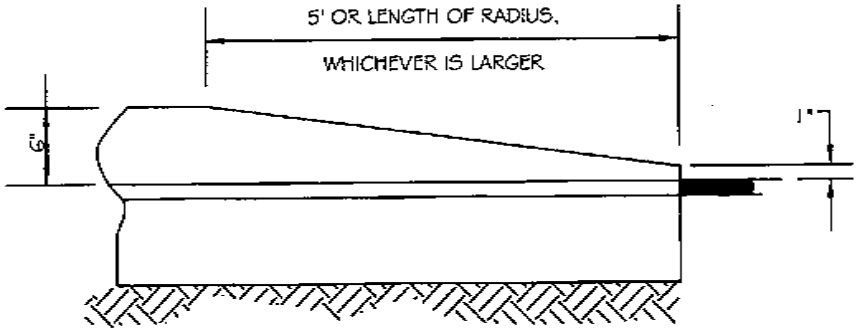

END OF MEDIAN RAMP

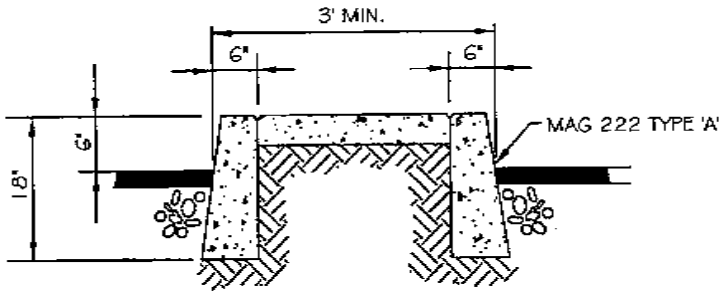

SECTION A - A

DETAIL NO. C-225 NTS	CITY OF CHANDLER STANDARD DETAIL	GENERAL MEDIAN DESIGN	APPROVED: CITY ENGINEER DATE: 01/08/09	DETAIL NO. C-225 NTS

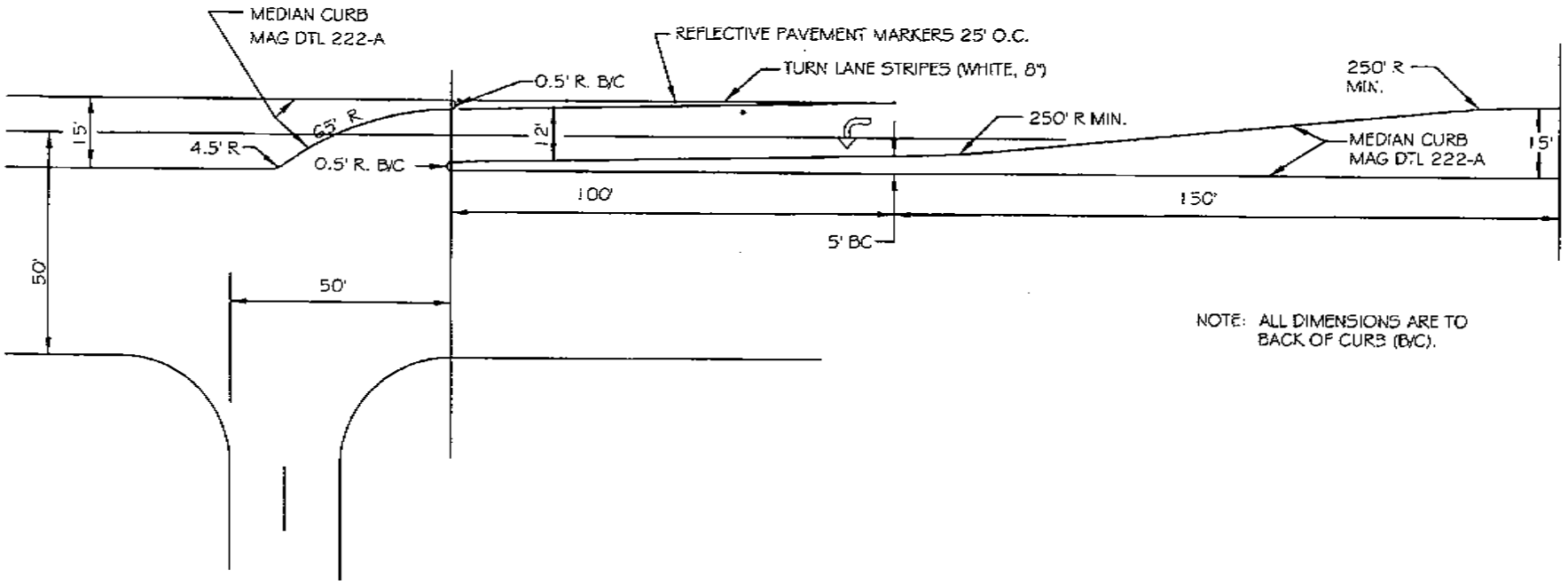

NOTE: ALL DIMENSIONS ARE TO BACK OF CURB (B/C).

DETAIL NO. C-226 NTS	CITY OF CHANDLER STANDARD DETAIL	**"LEFT IN ONLY" MEDIAN DESIGN 16' WIDE MEDIAN**	APPROVED: _____ CITY ENGINEER DATE: June 12 '08	DETAIL NO. C-226 NTS

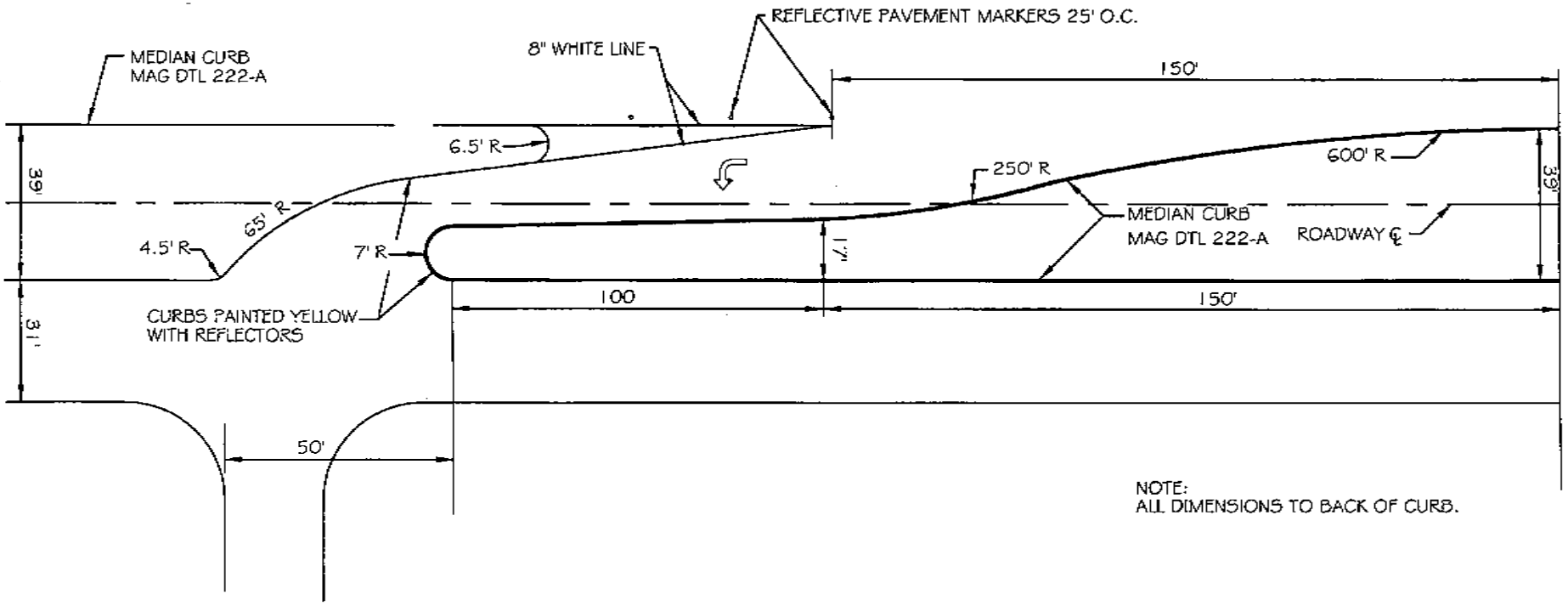

NOTE:
ALL DIMENSIONS TO BACK OF CURB.

DETAIL NO.				
C-227 NTS	CITY OF CHANDLER STANDARD DETAIL	**"LEFT IN ONLY" MEDIAN DESIGN 40' WIDE MEDIAN**	APPROVED: Elizabeth [signature] CITY ENGINEER DATE: 2/26/07	DETAIL NO. **C-227** NTS

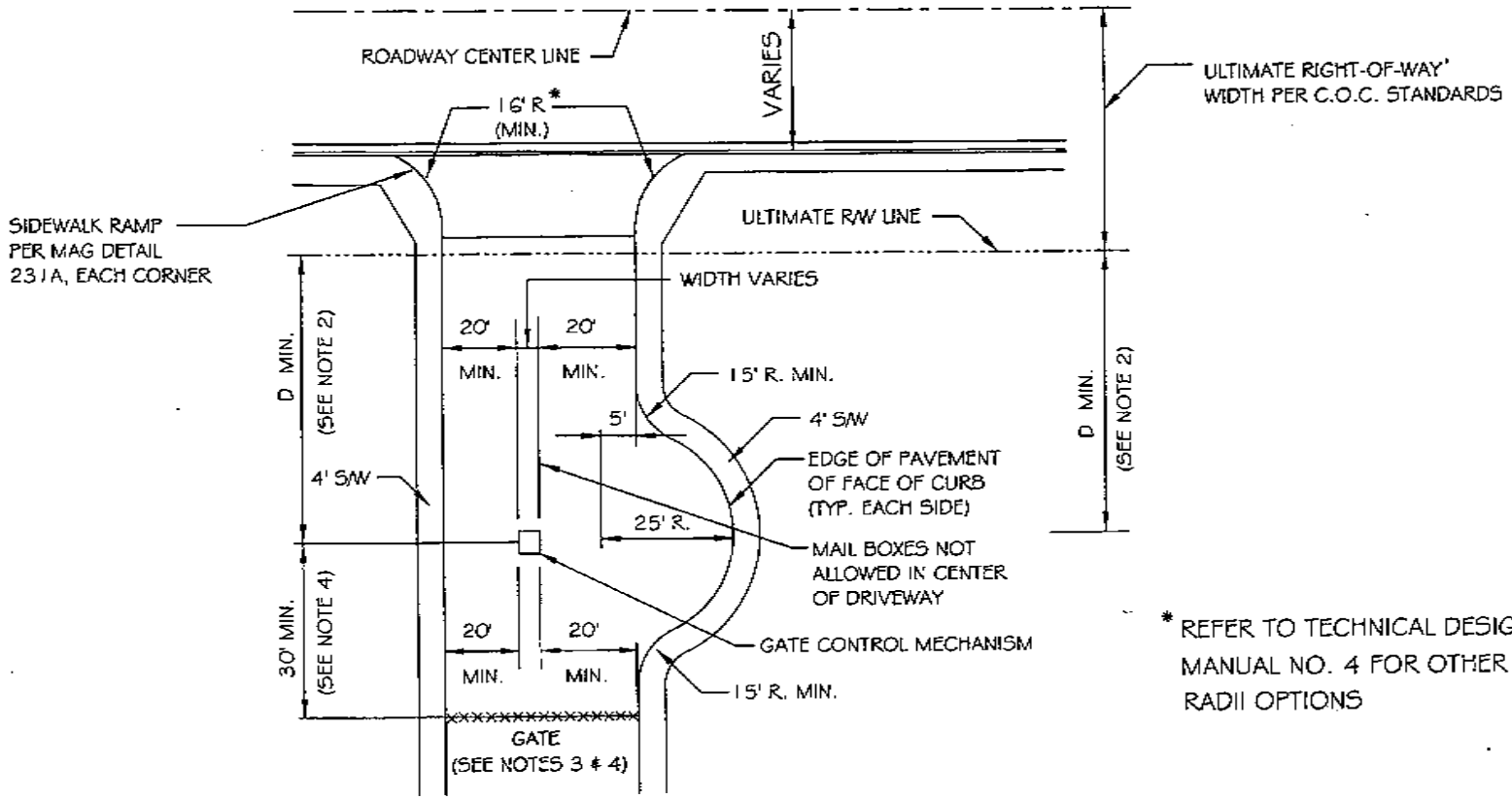

* REFER TO TECHNICAL DESIGN MANUAL NO. 4 FOR OTHER RADII OPTIONS

NOTES :

1. DRIVEWAY MAX. WIDTH = 45 FEET IN STREET R/W.
2. SETBACK REQUIREMENT BY NUMBER OF RESIDENTIAL UNITS:

NUMBER OF UNITS	D MIN.
LESS THAN 100	40'
101 TO 150	60'
151 TO 200	80'
GREATER THAN 200	100'

3. GATE INSTALLED AT BEGINNING OF 15' RADIUS.
4. 30' MIN. DIMENSION FROM CENTERLINE OF GATE CONTROL MECHANISM TO FACE OF GATE.
5. WHERE MORE THAN ONE ENTRY IS PROVIDED, $D_{MIN.}$ MAY BE REDUCED WITH APPROVAL OF CITY ENGINEER.
6. ELECTRICAL CONTROLLED GATES SHALL BE EQUIPPED WITH AN AUTOMATIC OPENING PRE-EMPTION DEVICE, TIMED TO REMAIN OPEN FOR 30 MINUTES, AND A KNOX KEY SWITCH OVERRIDE LOCATED AT THE GATE CONTROL MECHANISM.

DETAIL NO. C-228 NTS	CITY OF CHANDLER STANDARD DETAIL	**TYPICAL DRIVEWAY ACCESS TO PRIVATE GATED COMMUNITY**	APPROVED: CITY ENGINEER DATE: 11-19-99	DETAIL NO. C-228 NTS

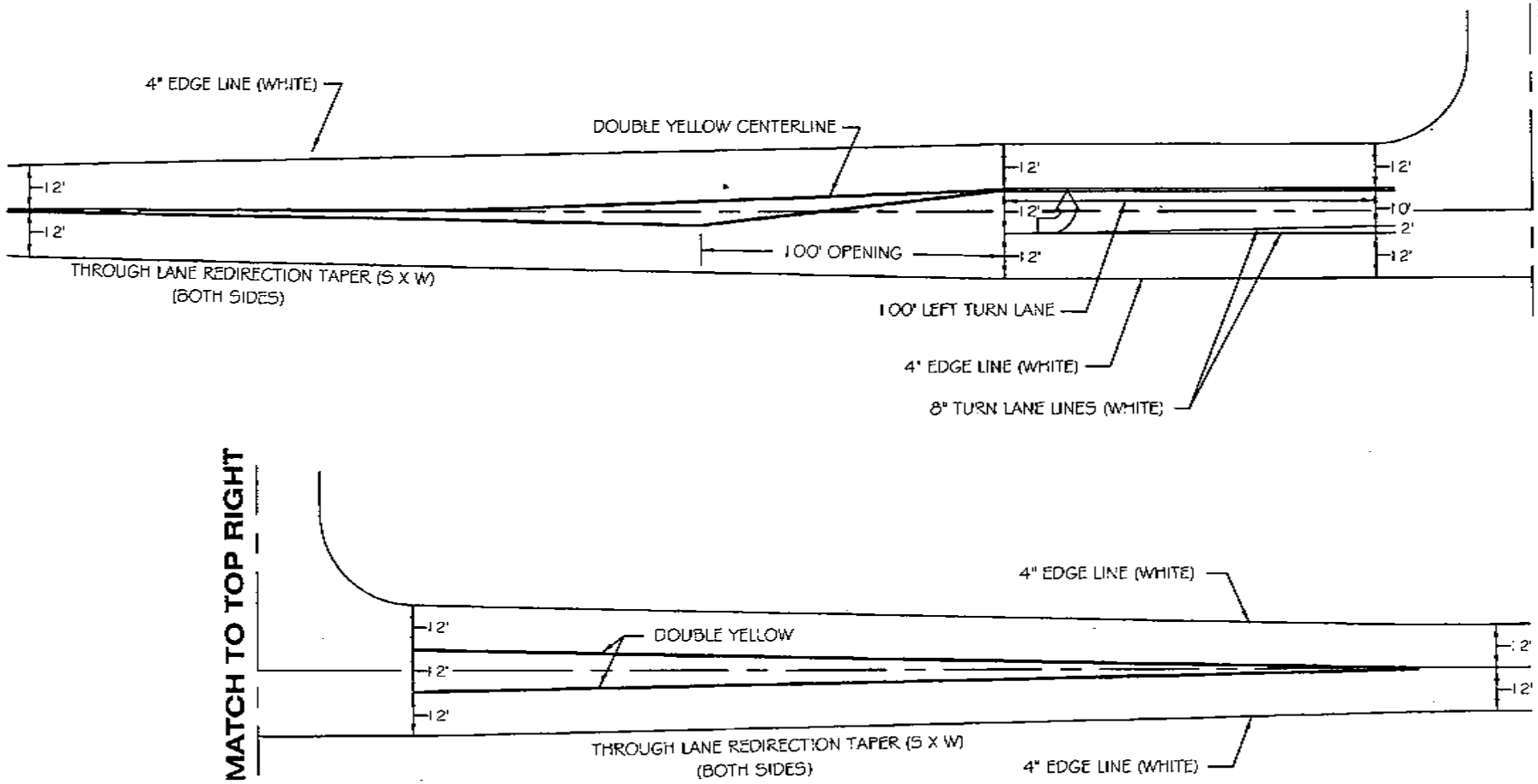

NOTE:

FOR SPEED LIMIT LESS THAN 40 M.P.H. USE 100' TURN LANE ENTRY

DETAIL NO. C-229 NTS	CITY OF CHANDLER STANDARD DETAIL	**LEFT TURN BAY ON TWO-LANE ROADWAY (TEMPORARY WIDENING, CROSS STREET ON ONE SIDE ONLY)**	APPROVED: CITY ENGINEER DATE: January 11, 2002	DETAIL NO. C-229 NTS

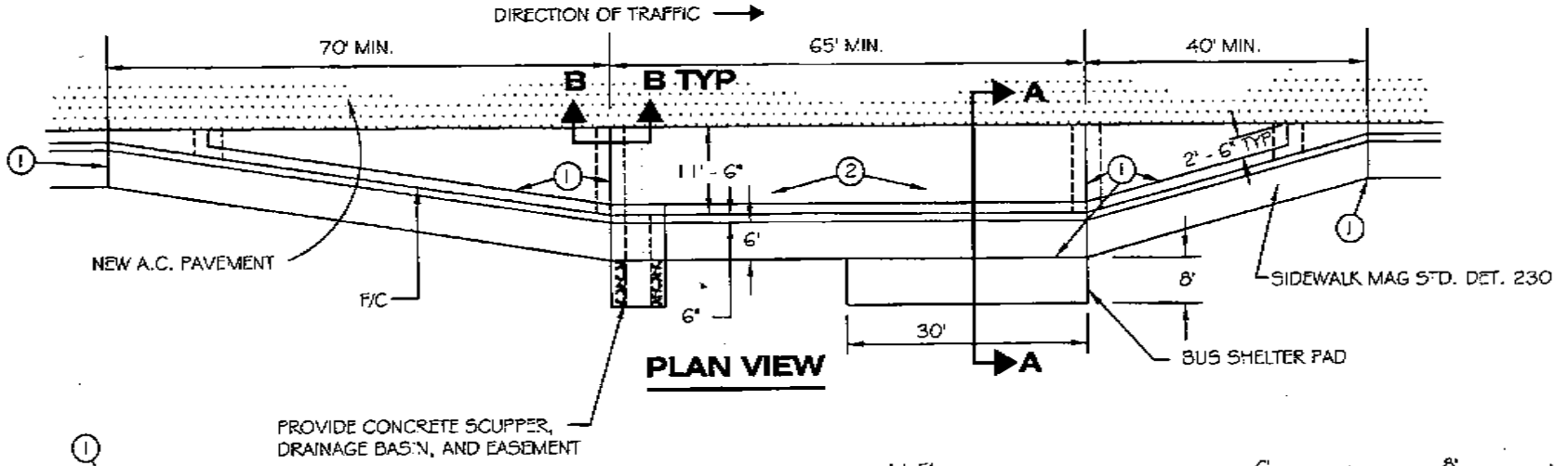

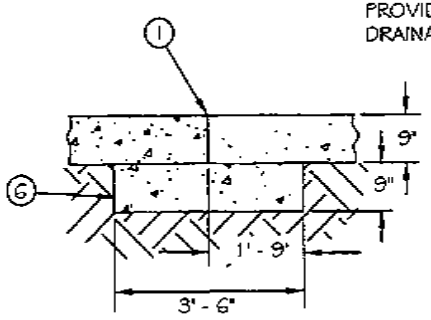

SECTION B-B

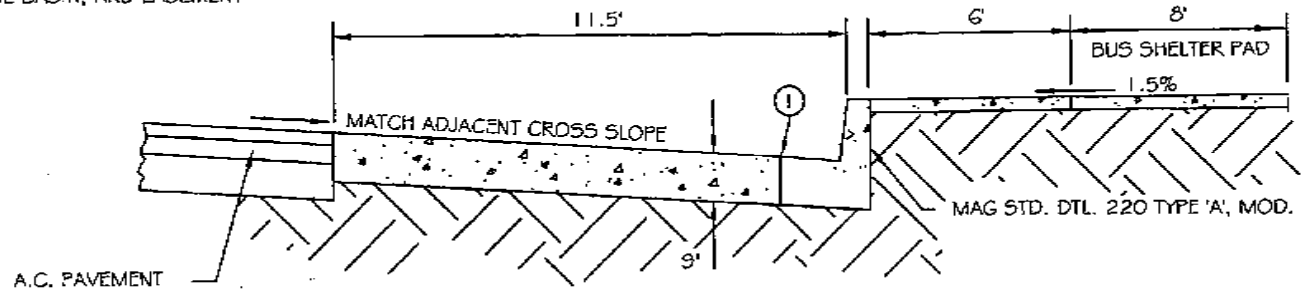

SECTION A-A

NOTES:

1. EXPANSION JOINT FILLER SHALL BE 1/2" BITUMINOUS PREFORMED EXPANSION JOINT FILLER ASTM D-1751. (FULL 8" DEPTH.)
2. CONCRETE BUS BAY SHALL BE BROOM FINISHED.
3. ALL CONCRETE SHALL CONFORM TO MAG STD. SPEC. SEC. 725. (CLASS 'A' FOR PAVEMENT.)
4. PLACE A COMBINATION CLEAR CURING COMPOUND AND WEATHER SEALER ON FINISHED SURFACE.
5. THE SUBGRADE SHALL BE PREPARED IN ACCORDANCE WITH MAG STD. SPEC. SEC. 301.
6. CONCRETE PAD SHALL BE POURED SEPARATELY FROM THE BUS BAY PAVEMENT.
7. CONTRACTION JOINTS IN THE BUS BAY SHALL MATCH THE SPACING OF THOSE IN THE CURB AND GUTTER.

DETAIL NO. C-230 NTS	CITY OF CHANDLER STANDARD DETAIL	CONCRETE BUS BAYS	APPROVED: CITY ENGINEER DATE: 01/08/09	DETAIL NO. C-230 NTS

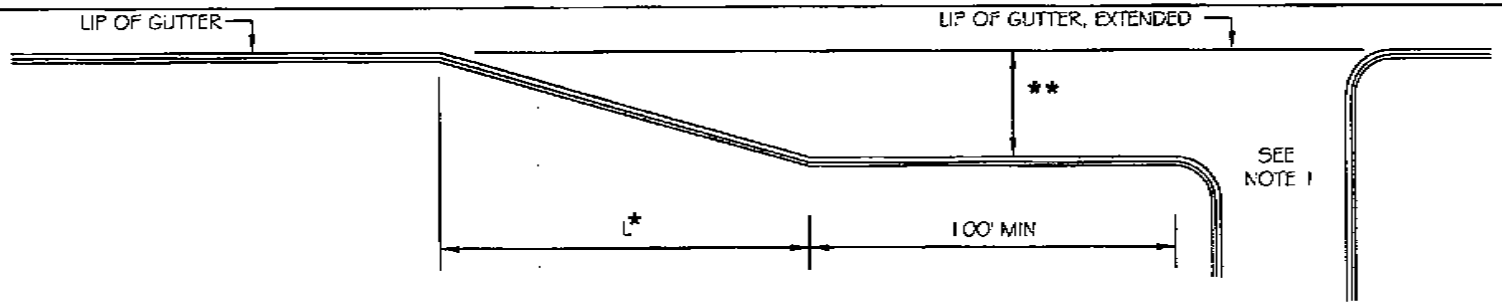

RIGHT TURN/DECELERATION LANE FOR DRIVEWAYS

* TAPER LENGTH $L = \frac{WS}{3}$, WHERE W IS TURN LANE WIDTH IN FEET AND S IS POSTED SPEED IN MPH. MINIMUM L = 100'

** 10.5' LIP TO LIP FOR ARTERIAL WITH BIKE LANE. SEE C-620 FOR STRIPING.

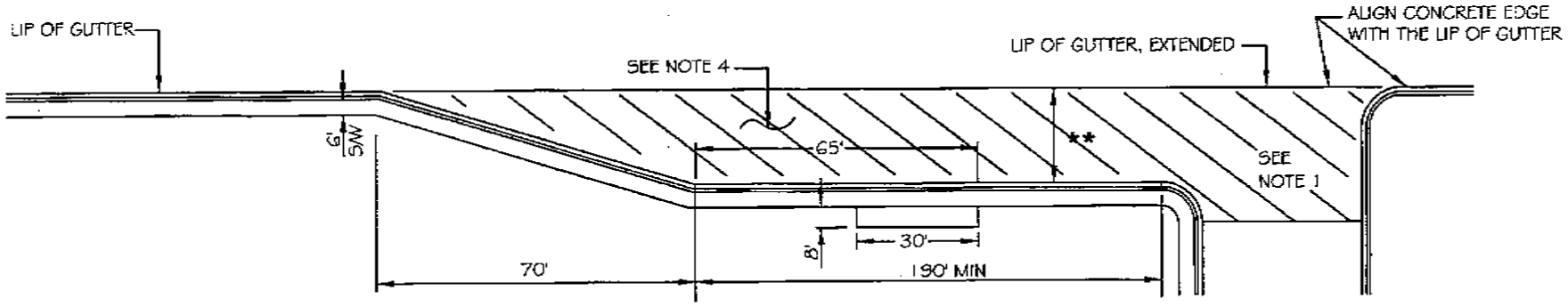

INTEGRAL BUS BAY/DECELERATION LANE

NOTES:

1. USE MAG STANDARD DETAIL 250 OR 251 FOR ENTRANCE, CURB AND SIDEWALK CONFIGURATION. RECOMMENDED DRIVEWAY DIMENSIONS ARE SPECIFIED IN TECHNICAL DESIGN MANUAL NO. 4, TABLE 7.
2. MAINTAIN NORMAL CROWN THROUGHOUT ENTIRE CROSS-SECTION. A VALLEY GUTTER IS NOT ALLOWED BETWEEN THE THROUGH LANE AND THE RIGHT TURN/DECELERATION LANE, OR IN THE BUS BAY/DECELERATION LANE.
3. THE SIDEWALK IS TO BE CONSTRUCTED ADJACENT TO THE BACK OF CURB FOR THE ENTIRE LANE LENGTH, BUS BAY/DECELERATION LANE ONLY.
4. BUS BAY / DECELERATION LANE SHALL BE CONSTRUCTED OF 9" MINIMUM CLASS 'A' CONCRETE.
5. REFER TO C-620 FOR SIGNING AND STRIPING.

DETAIL NO. C-231 NTS	CITY OF CHANDLER STANDARD DETAIL	RIGHT TURN/DECELERATION LANE FOR DRIVEWAYS	APPROVED: CITY ENGINEER DATE: 01/06/09	DETAIL NO. C-231 NTS

R- 50' MINIMUM (R/W)
R1 - 44 1/2' MINIMUM ROADWAY (B.O.C.)
R2 - 25' MINIMUM ROADWAY (B.O.C.)

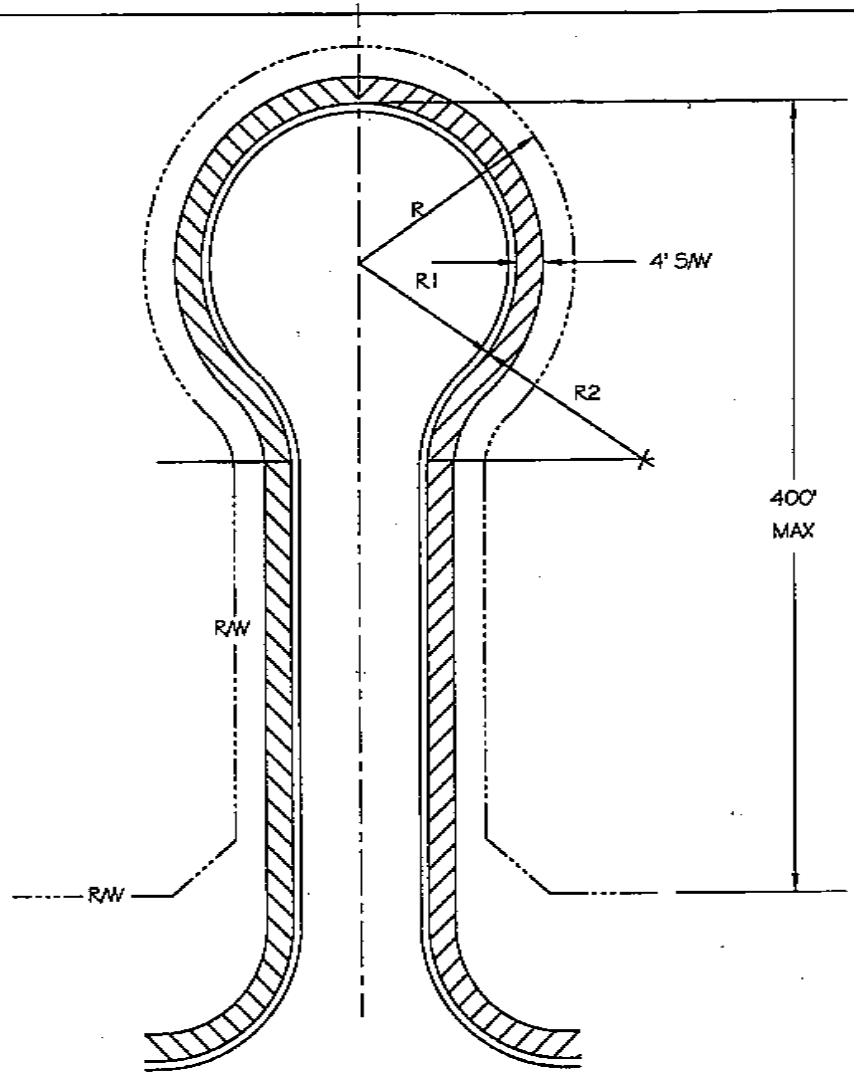

NOTES

1. CONCRETE: CITY OF CHANDLER STANDARD DETAIL C-213.
2. PAVING: CITY OF CHANDLER STANDARD DETAIL C-213.
3. SIDEWALKS REQUIRED. CITY OF CHANDLER STANDARD DETAIL C-213.

C-232 **REPLACES** **41**	CITY OF CHANDLER STANDARD DETAIL	**CUL-DE-SAC**	APPROVED: Bryan D. Patterson CITY ENGINEER DATE: 11-19-99	DETAIL NO. **C-232** NTS

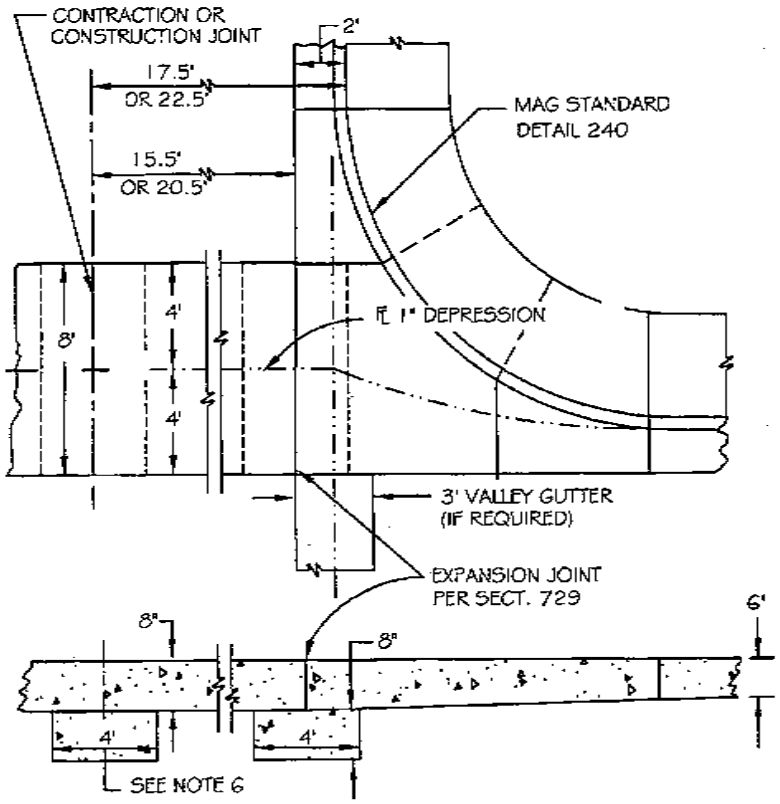

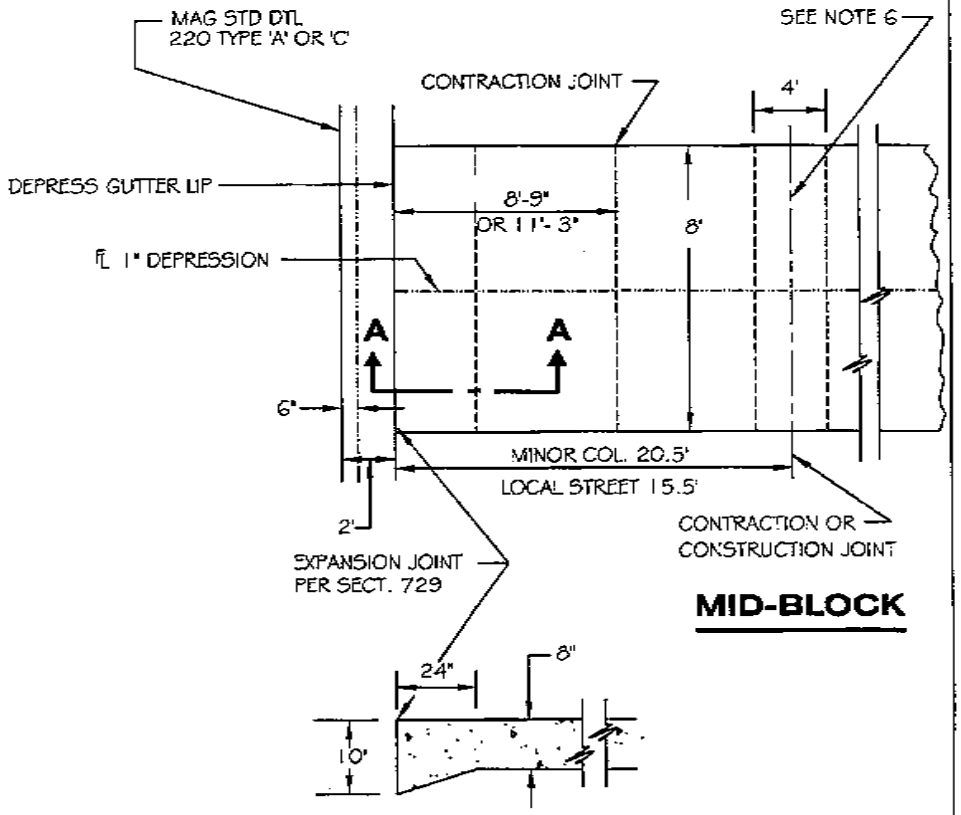

MID-BLOCK

SECTION A-A

NOTES:

1. SECTION A-A REQUIRED WITH 8' VALLEY GUTTERS AT MIDBLOCK ONLY.
2. 8' VALLEY GUTTER IN MIDBLOCK USES SAME JOINTING AS AT INTERSECTION.
3. 8' MIDBLOCK VALLEY GUTTER IS TO BE USED ON LOCAL AND MINOR COLLECTOR STREETS ONLY.
4. ALL CONCRETE TO BE CLASS 'B' UNLESS OTHERWISE APPROVED. (SECT. 725)
5. EITHER CONSTRUCTION JOINT OR CONTRACTION JOINT IS REQUIRED AT CENTER LINE OF STREET.
6. A SEPARATE CONCRETE PAD IS REQUIRED WHEN VALLEY GUTTER IS POURED HALF AT A TIME.
7. THIS 8' VALLEY GUTTER DETAILS SHALL TO BE USED WHERE THROUGH TRAFFIC IS NOT REQUIRED TO STOP. AT STOP-CONTROLLED LEGS OF INTERSECTIONS, MAG STD DTL 240 SHALL BE USED.

DETAIL NO. C-233 NTS	CITY OF CHANDLER STANDARD DETAIL	**VALLEY GUTTER**	APPROVED: _____ CITY ENGINEER DATE: 01/08/09	DETAIL NO. C-233 NTS

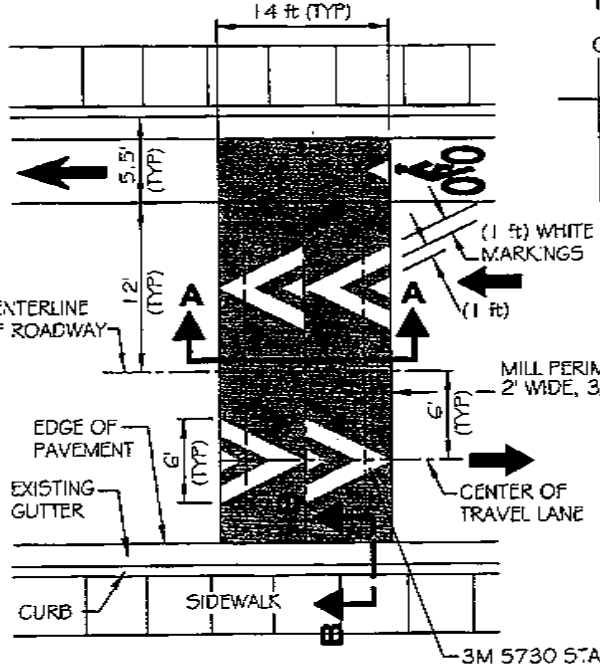

PLAN VIEW

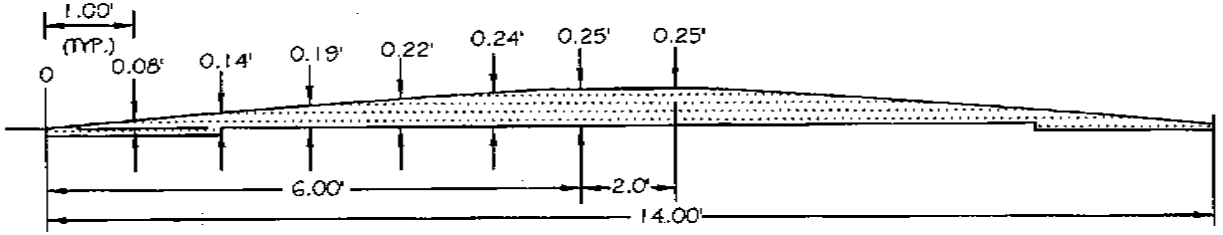

CROSS SECTION A-A

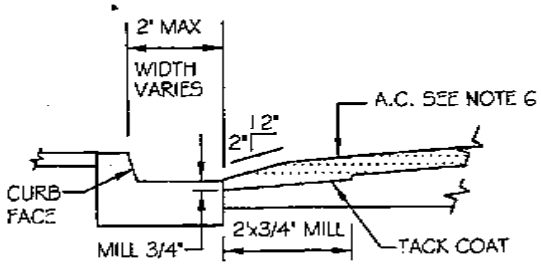

CROSS SECTION B-B

3M 5730 STAYMARK WHITE REFLECTORIZED TAPE OR BRITE-LINE 2000 WHITE INTERSECTION PAVEMENT MARKING TAPE OR EQUAL IF APPROVED BY THE TRANSPORTATION STUDIES MANAGER.

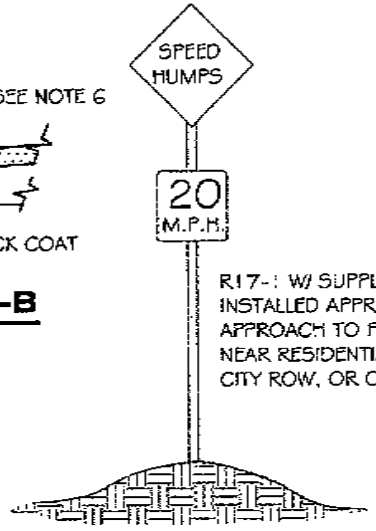

R17-1 W/ SUPPLEMENTAL PLATE TO BE INSTALLED APPROX. 150' IN ADVANCE OF APPROACH TO FIRST HUMP (TYP.), AT OR NEAR RESIDENTIAL PROPERTY LINE, WHEN CITY ROW, OR ON STREET LIGHT POLE.

NOTES:

1. HUMPS MUST BE THE FULL 0.25' FOR MAXIMUM EFFECT BUT SHALL NOT EXCEED 0.27'.
2. HUMPS CONSTRUCTED OVER 0.27' SHALL BE CORRECTED AT THE CONTRACTORS EXPENSE.
3. CROSS-SECTION ELEVATIONS SHALL HAVE A MAXIMUM TOLERANCE OF ± 0.02'.
4. SPEED HUMPS SHALL NOT BE PLACED OVER MANHOLES, WATER VALVES, JUNCTION STRUCTURES, ETC.
5. THE EXISTING ROADWAY SHALL BE MILLED TO A DEPTH OF 3/4", AROUND THE PERIMETER AS SHOWN. CROSS SECTION DIMENSIONS DO NOT INCLUDE THE 3/4" MILLING.
6. HUMP SHALL BE CONSTRUCTED WITH A1 2.5 MM EVAC MIX. A TACK COAT SHALL BE APPLIED PRIOR TO APPLICATION OF PAVEMENT.
7. SPEED HUMPS SHALL BE PLACED AT LOCATIONS APPROVED BY TRAFFIC ENGINEERING.
8. CONTACT TRAFFIC ENGINEERING (782-3454) ONE WEEK PRIOR TO INSTALLATION TO COORDINATE PAVEMENT MARKINGS AND SIGNING.

DETAIL NO. C-234 NTS	CITY OF CHANDLER STANDARD DETAIL	**14' SPEED HUMP**	APPROVED: _____ CITY ENGINEER DATE: 01/06/09	DETAIL NO. C-234 NTS

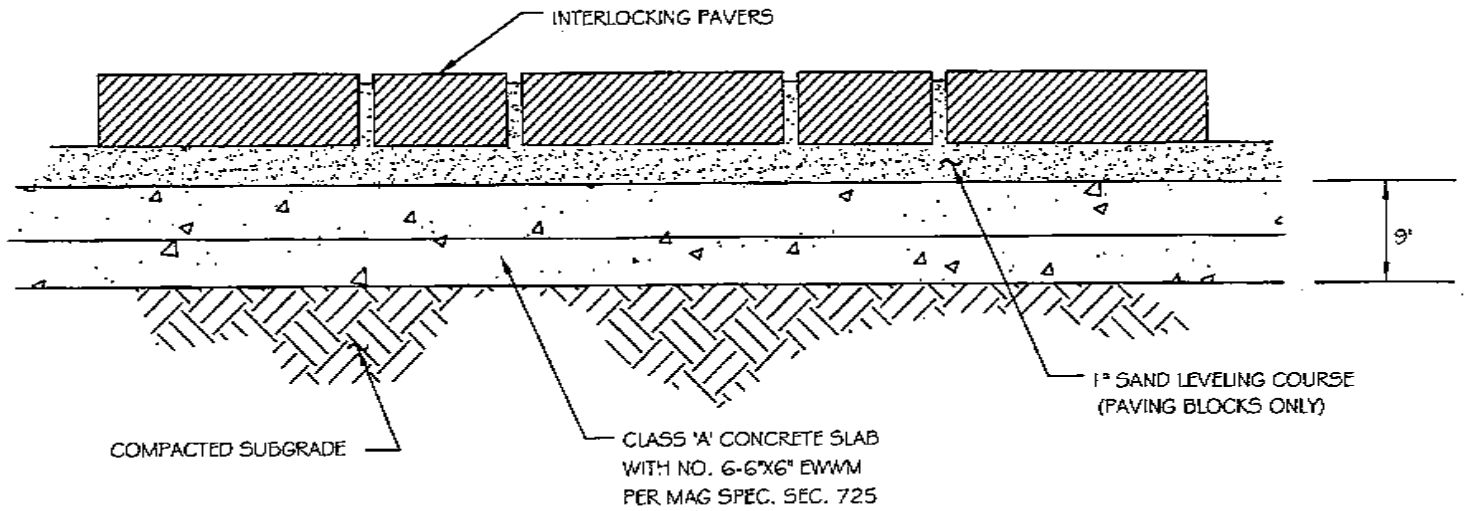

NOTES:

1. 12" MINIMUM CONCRETE RIBBON TO BE PLACED ON THE SIDES AND AT THE BEGINNING AND END OF PAVERS.
2. PROVIDE CITY STONE II, OLD TOWN BLEND PAVER AND PATTERN.
3. DEVELOPER SHALL SUPPLY THE CITY 100 EACH REPLACEMENT PAVERS.

DETAIL NO. C-236 NTS	CITY OF CHANDLER STANDARD DETAIL	**INTERLOCKING PAVING BLOCKS AND DECORATIVE CONCRETE TRAVELED SURFACE**	APPROVED: _____ CITY ENGINEER DATE: 01/08/09	DETAIL NO. C-236 NTS

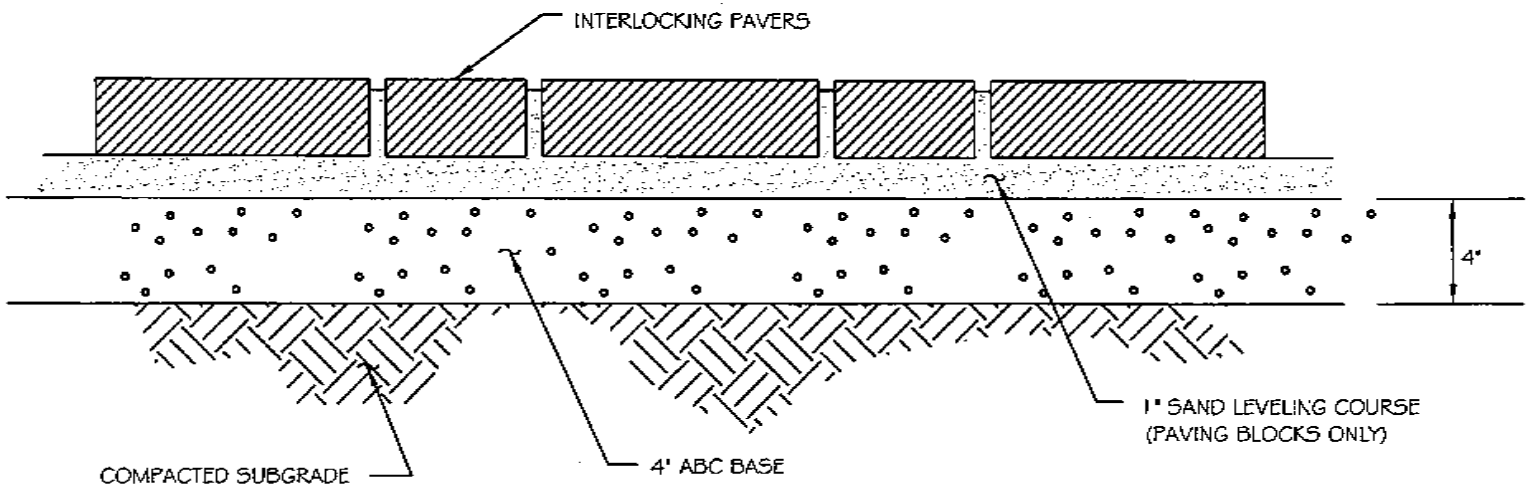

NOTES:

1. 12" MINIMUM CONCRETE RIBBON TO BE PLACED ON THE SIDES AND AT THE BEGINNING AND END OF PAVERS.
2. PROVIDE CITY STONE II, OLD TOWN BLEND PAVER AND PATTERN.
3. DEVELOPER SHALL SUPPLY CITY WITH 100 EACH REPLACEMENT PAVERS.

C-237 **REPLACES** **14B**	CITY OF CHANDLER STANDARD DETAIL	**INTERLOCKING PAVING BLOCKS AND DECORATIVE CONCRETE NON-TRAVELED SURFACE**	APPROVED: _____ CITY ENGINEER DATE: 2/26/07	DETAIL NO. **C-237** NTS

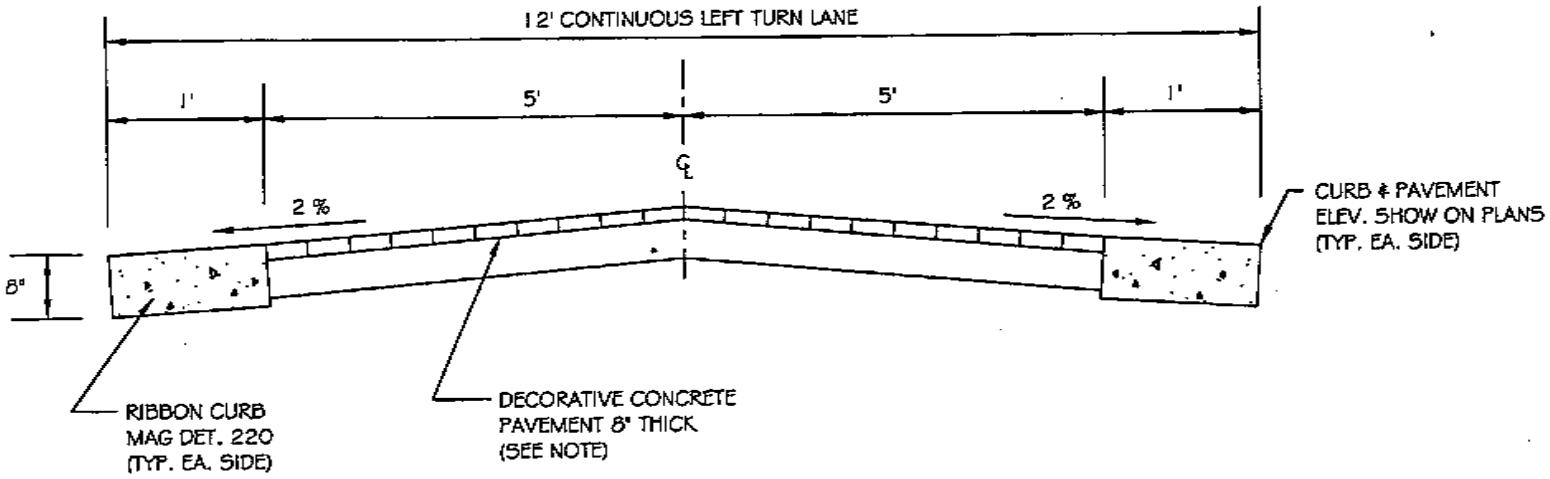

NOTE:

1. DECORATIVE CONCRETE SHALL BE COMMON BRICK PATTERN CONSTRUCTED IN ACCORDANCE WITH MAG SPEC. 340 WITH A MINIMUM THICKNESS OF 8". DECORATIVE SURFACE SHALL BE 3000 PSI MIX (6 SACK MIN.) IF NOT POURED MONOLITHICALLY IT SHALL BE POURED WITHIN 4 HOURS OF THE BASE COURSE WITH A MINIMUM THICKNESS OF 1-1/2" AND FINISHED IN ACCORDANCE WITH MANUFACTURERS RECOMMENDATIONS. COLOR TO BE APPROVED BY CITY ENGINEER.

C-238 **REPLACES** **14C**	CITY OF CHANDLER STANDARD DETAIL	**DECORATIVE CONCRETE AT GRADE TRAVELED SURFACE**	APPROVED: Bryan D. Patterson CITY ENGINEER DATE: 11-19-99	DETAIL NO. **C-238** NTS

BASE THICKNESS CHART

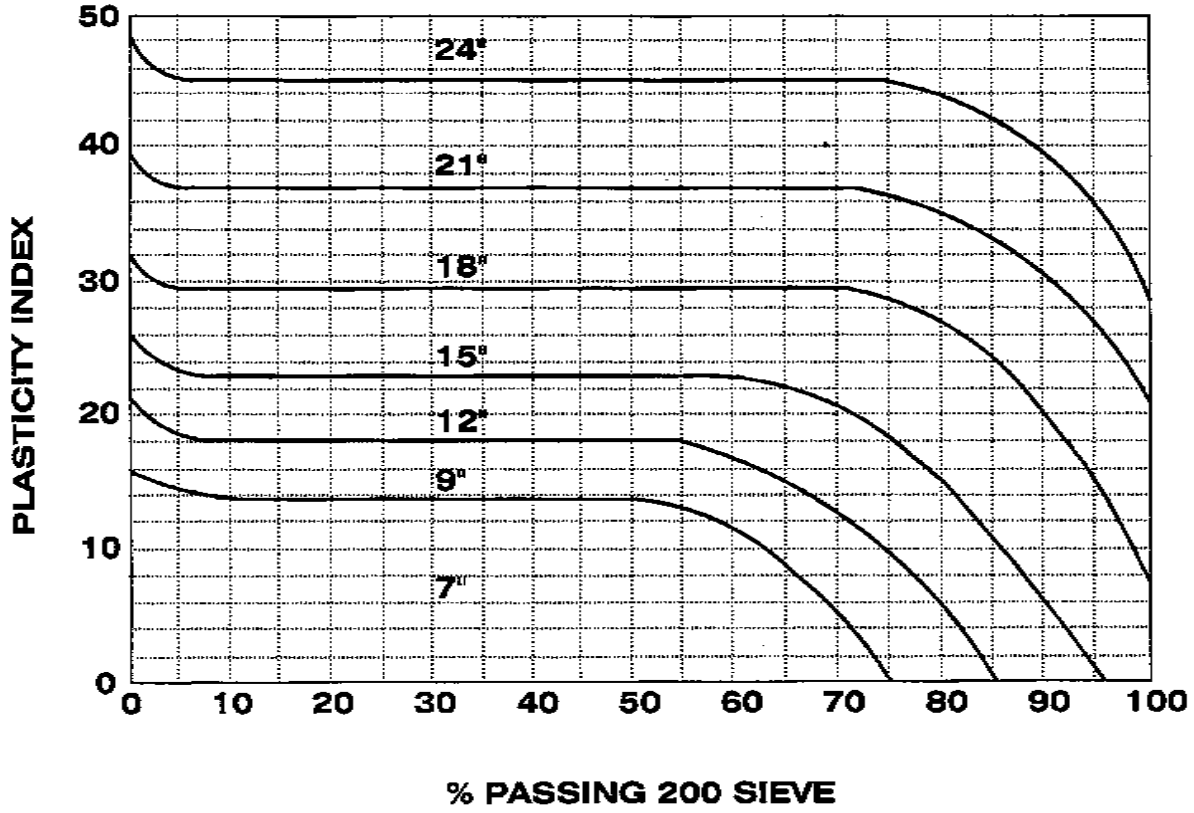

NOTES:

1. TOP 6" OF BASE SHALL BE ABC. BALANCE SHALL BE ABC OR SELECT MATERIAL.
2. MINIMUM DEPTH OF FLEXIBLE BASE COURSE REQUIRED UNDER 5" (MIN.) BIT. SURFACE.

DETAIL NO. C-239 NTS	CITY OF CHANDLER STANDARD DETAIL	DEPTH OF BASE COURSE MAJOR & MINOR ARTERIALS	APPROVED: CITY ENGINEER DATE: 01/06/09	DETAIL NO. C-239 NTS

BASE THICKNESS CHART

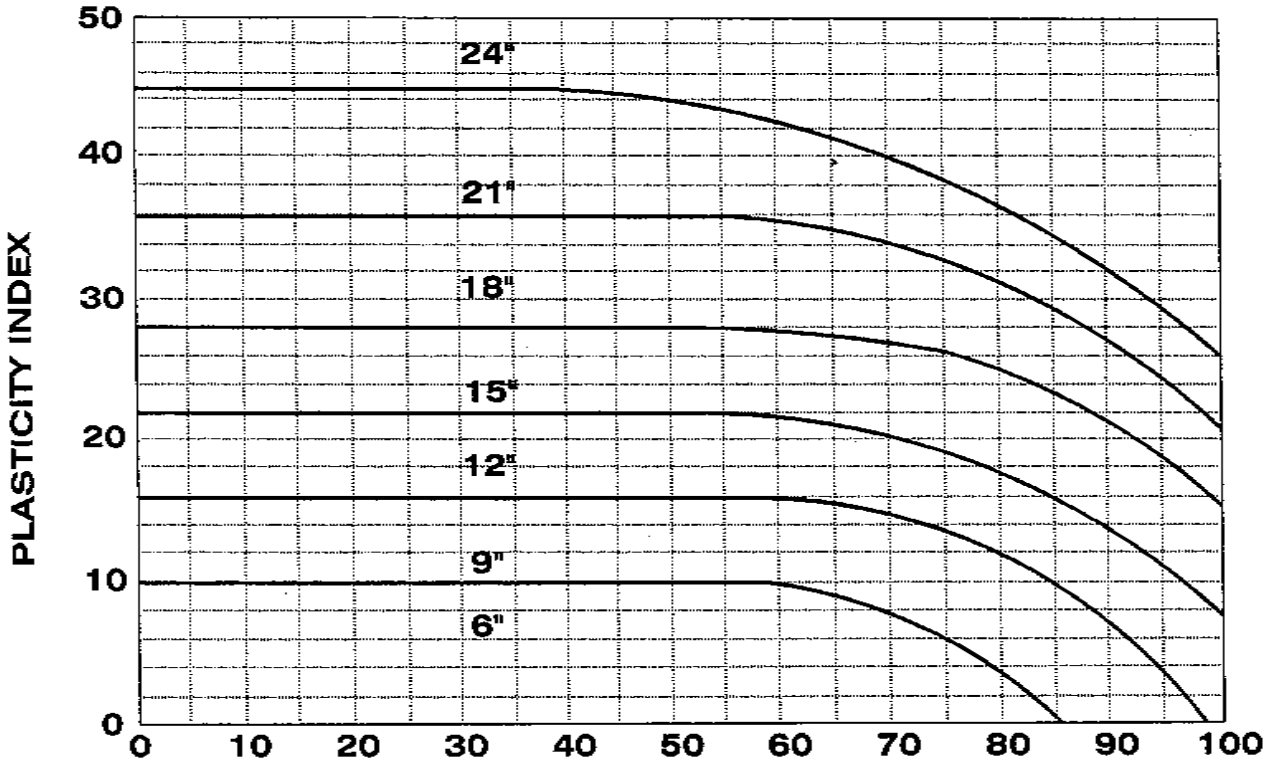

NOTES:

1. TOP 6" OF BASE SHALL BE ABC. BALANCE SHALL BE ABC OR SELECT MATERIAL.
2. MINIMUM DEPTH OF FLEXIBLE BASE COURSE REQUIRED UNDER 3" (MIN.) BIT. SURFACE.

DETAIL NO. C-240 NTS	CITY OF CHANDLER STANDARD DETAIL	DEPTH OF BASE COURSE NON RESIDENTIAL COLLECTOR & LOCAL STREETS	APPROVED: CITY ENGINEER DATE: 01/14/15	DETAIL NO. C-240 NTS

BASE THICKNESS CHART

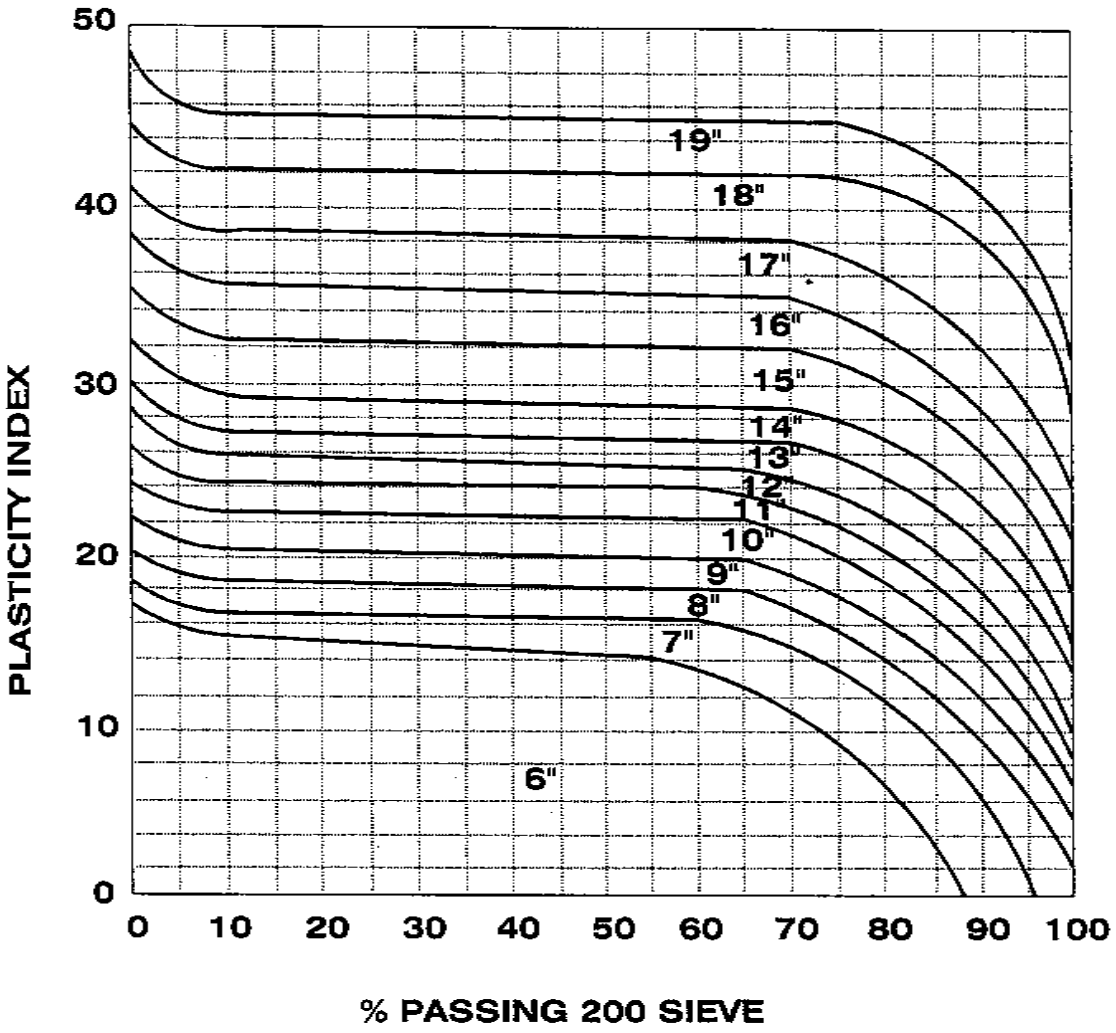

NOTES:

1. TOP 6" OF BASE SHALL BE ABC. BALANCE SHALL BE ABC OR SELECT MATERIAL.
2. MINIMUM DEPTH OF FLEXIBLE BASE COURSE REQUIRED UNDER 3" (MIN.) BIT. SURFACE.

DETAIL NO. C-241 NTS	CITY OF CHANDLER STANDARD DETAIL	DEPTH OF BASE COURSE COLLECTOR STREETS	APPROVED: CITY ENGINEER DATE: 01/14/10	DETAIL NO. C-241 NTS

BASE THICKNESS CHART

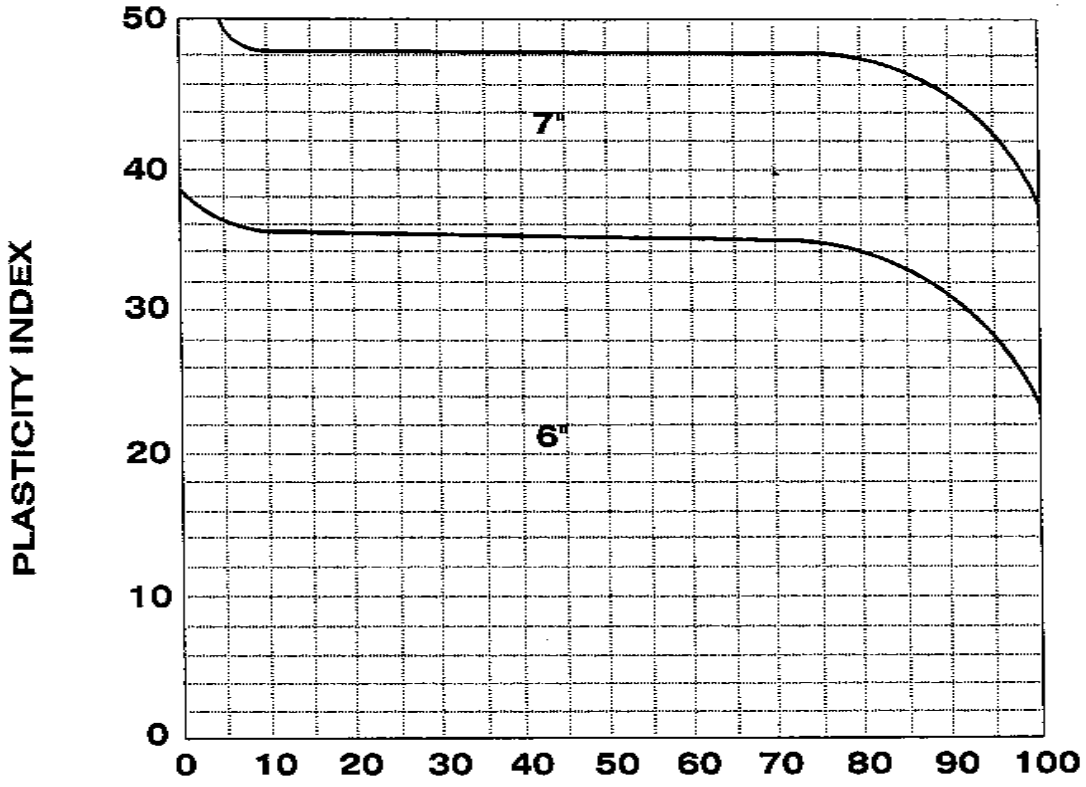

NOTE:

MINIMUM DEPTH OF FLEXIBLE BASE COURSE REQUIRED UNDER 3" (MIN.) BIT. SURFACE.

DETAIL NO. **C-242** NTS	CITY OF CHANDLER STANDARD DETAIL	**DEPTH OF BASE COURSE RESIDENTIAL LOCAL STREETS**	APPROVED: CITY ENGINEER DATE: 01/14/10	DETAIL NO. **C-242** NTS

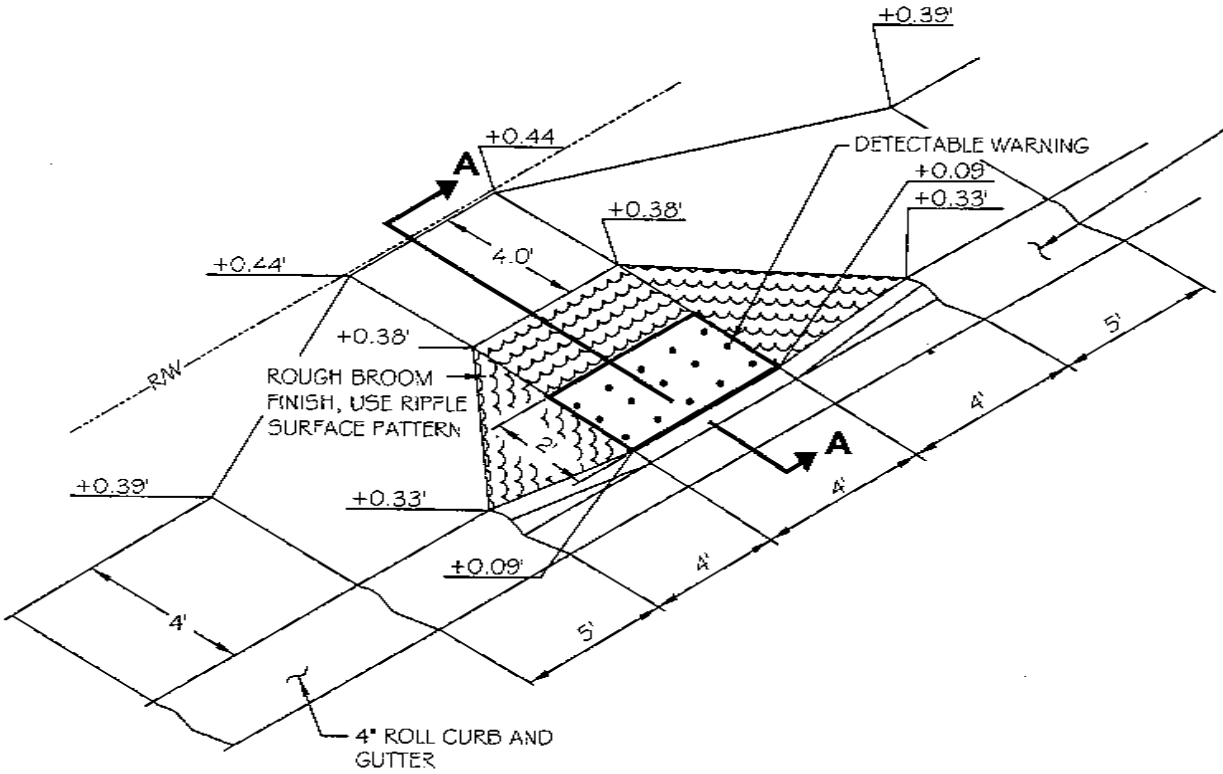

NOTES:

1. CONTROL ELEVATIONS SHOWN ARE IN RELATION TO GUTTER FL ELEVATION = 0.00
2. CLASS 'B' CONC. CONSTRUCTION AS PER M.A.G. STD. SPEC. 725.
3. DETECTABLE WARNING SHALL CONSIST OF RAISED TRUNCATED DOMES MANUFACTURED BY CAST IN TAC, TEKWAY DOME TILES WITH ANCHOR SYSTEM, RAMP DOME SYSTEMS WITH METAL FRAME, ADA SOLUTIONS HEAVY DUTY COMPOSITE WET SET REPLACEABLE TILES WITH ANCHORS, OR APPROVED EQUAL. COLOR SHALL BE TERRACOTTA. INSTALLATION SHALL BE IN ACCORDANCE WITH MANUFACTURER'S RECOMMENDATIONS.

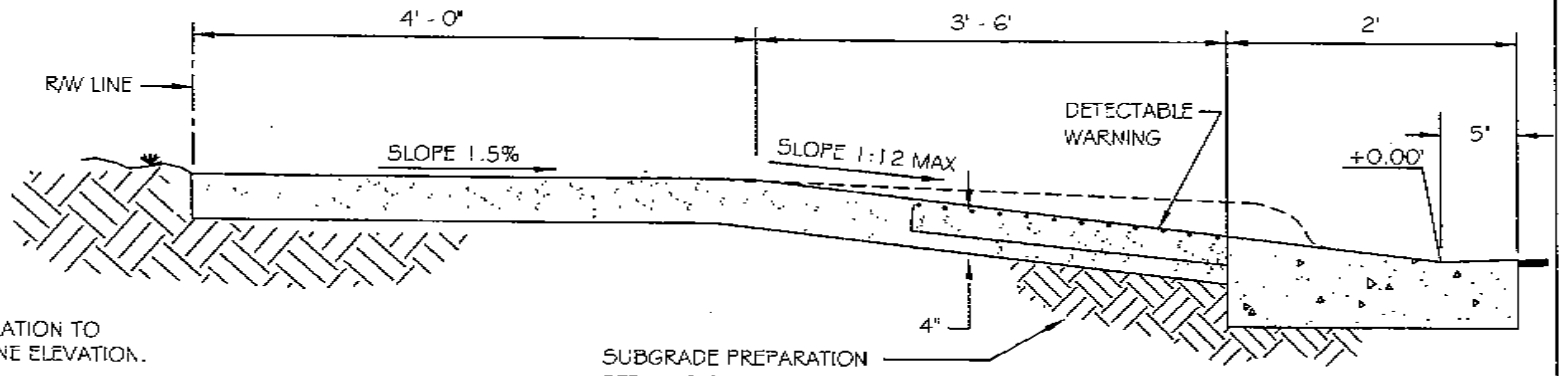

NOTE: ALL ELEVATIONS ARE IN RELATION TO ADJACENT GUTTER FLOW LINE ELEVATION.

SECTION A-A

DETAIL NO. C-243 NTS	CITY OF CHANDLER STANDARD DETAIL	**SIDEWALK RAMP FOR ROLL CURB**	APPROVED: Dan Doyle CITY ENGINEER DATE: 01-27-11	DETAIL NO. C-243 NTS

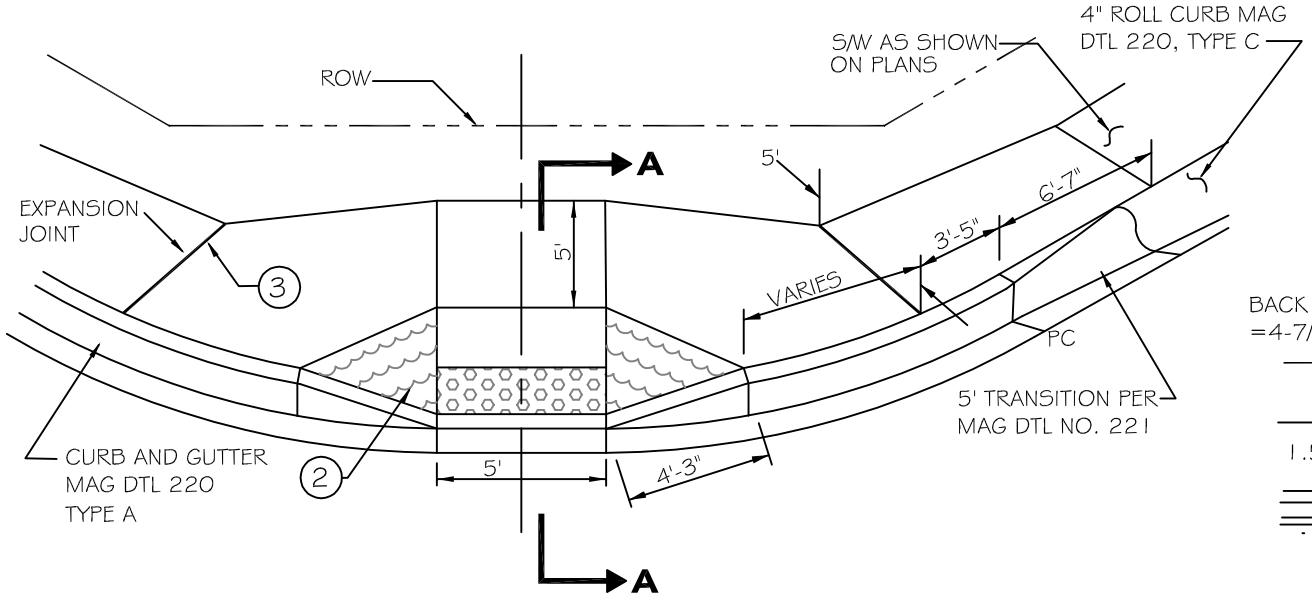

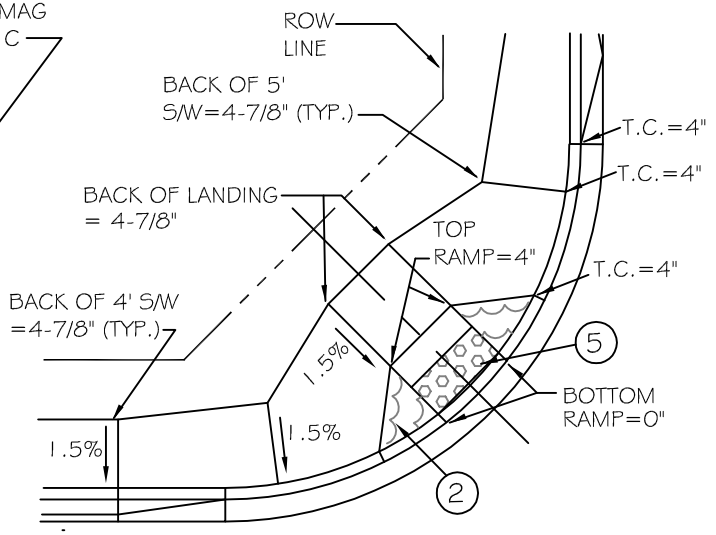

CONTROL ELEVATIONS

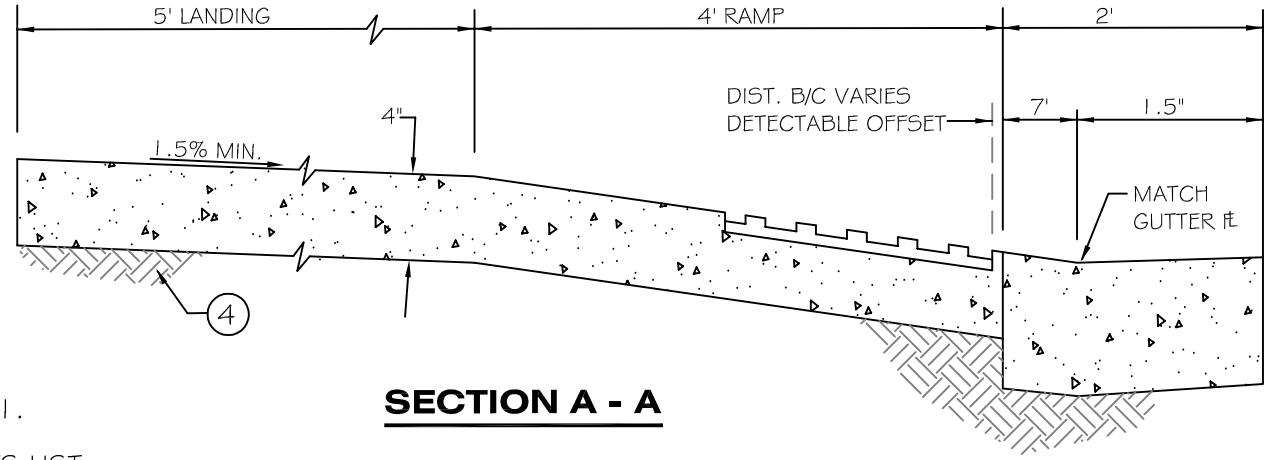

SECTION A - A

NOTES:

1. CLASS "B" CONCRETE PER MAG SECTION 725.
2. LIMITS OF HEAVY ROUGH BROOM FINISH.
3. EXPANSION JOINTS PER MAG SECTION 729.
4. SUBGRADE PREPARATION PER MAG SECTION 301.
5. DETECTABLE WARNING PER APPROVED PRODUCTS LIST.

DETAIL NO. C-244 NTS	CITY OF CHANDLER STANDARD DETAIL	SIDEWALK RAMP AT INTERSECTIONS FOR ROLL CURB	APPROVED: CITY ENGINEER DATE: 02/09/12	DETAIL NO. C-244 NTS

NOTE:
DETECTABLE WARNING SHALL CONSIST OF RAISED TRUNCATED DOMES MANUFACTURED BY CAST IN TAC, TEKWAY DOME TILES WITH ANCHOR SYSTEM, RAMP DOME SYSTEMS WITH METAL FRAME, ADA SOLUTIONS HEAVY DUTY COMPOSITE WET SET REPLACEABLE TILES WITH ANCHORS, OR APPROVED EQUAL. COLOR SHALL BE TERRACOTTA. INSTALLATION SHALL BE IN ACCORDANCE WITH MANUFACTURER'S RECOMMENDATIONS.

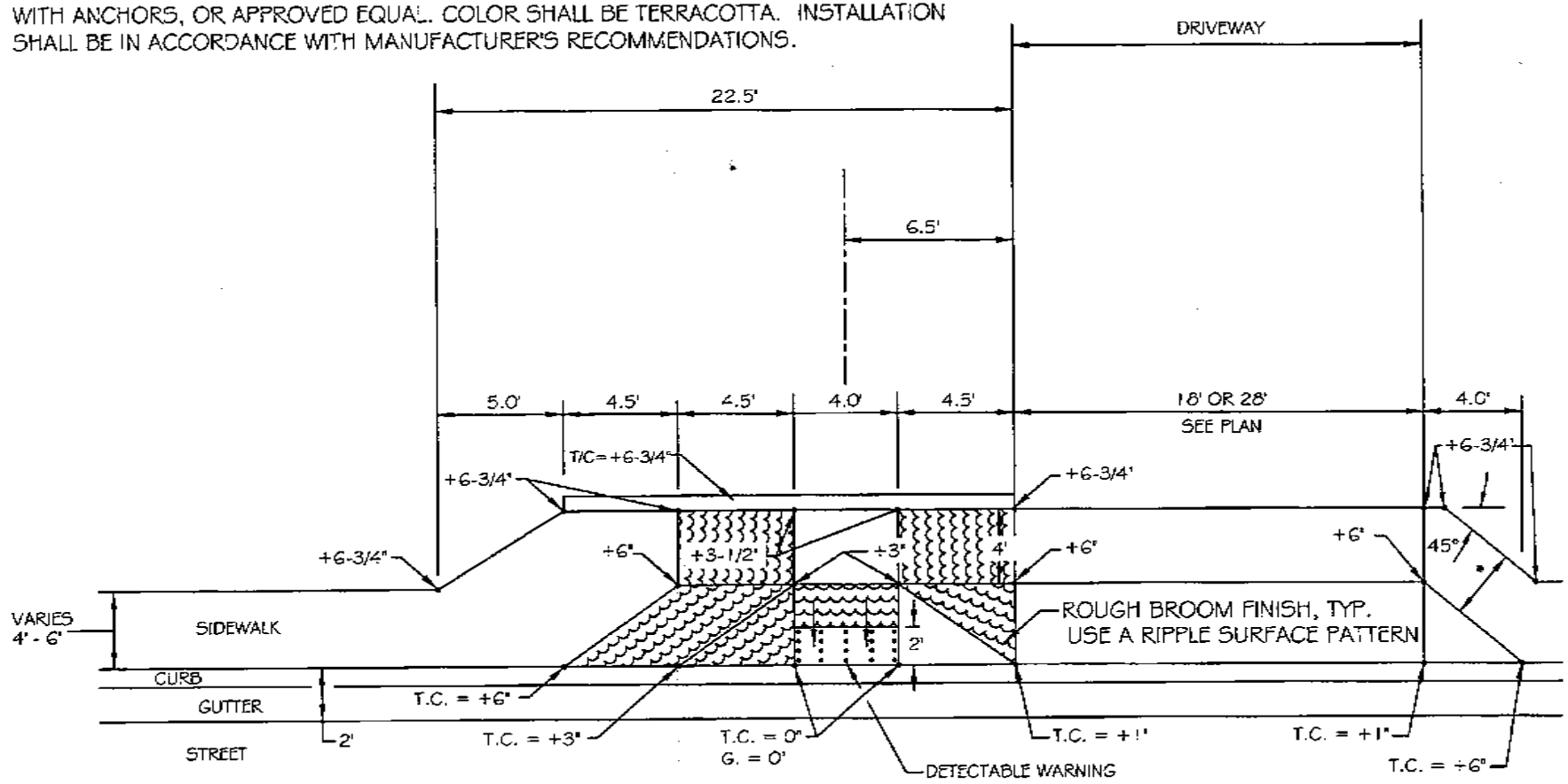

GUTTER ELEVATION = 0

CURB HEIGHT = 6"

* 4' CONSTANT WIDTH FOR 4' SIDEWALK
VARIABLE WIDTH FOR SIDEWALK GREATER THAN 4'

DETAIL NO. C-245 NTS	CITY OF CHANDLER STANDARD DETAIL	**COMBINED SIDEWALK RAMP AND RESIDENTIAL DRIVEWAY**	APPROVED: _____ CITY ENGINEER DATE: 01/08/09	DETAIL NO. C-245 NTS

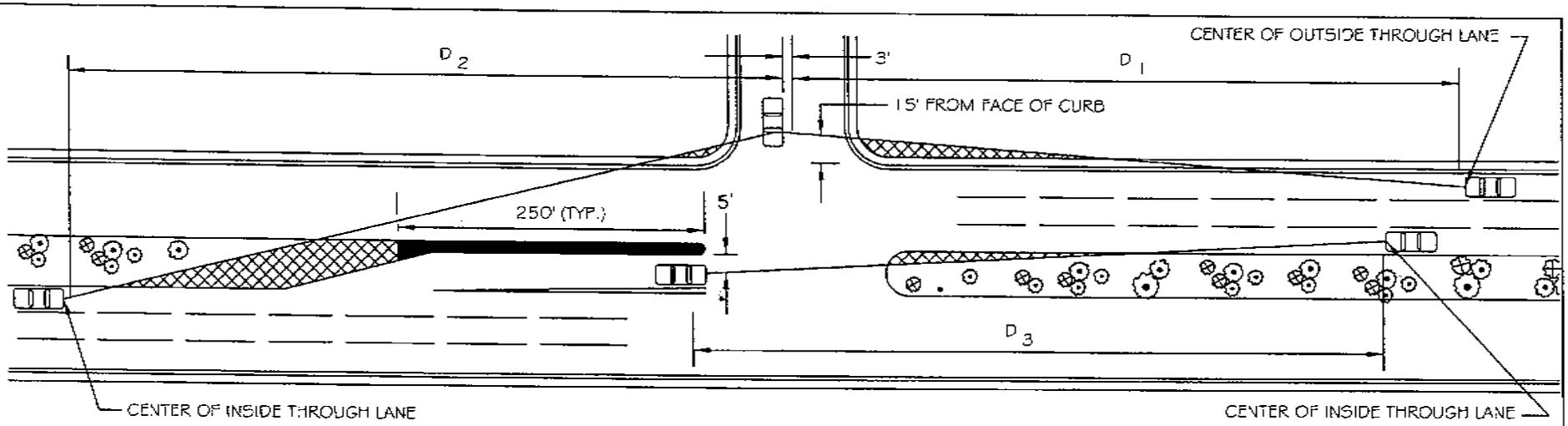

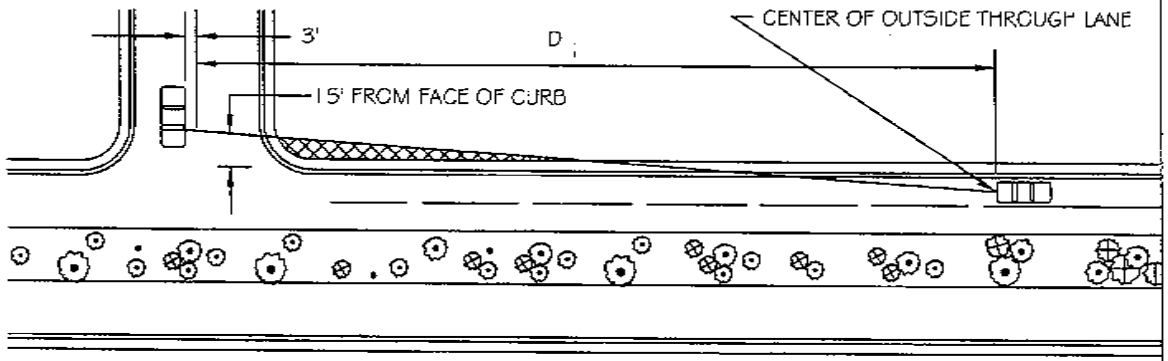

GROUND COVER, BUSHES, AND BOULDERS LESS THAN 24" (MATURE) IN HEIGHT, OR TREES TRIMMED TO 6' CLEARANCE ABOVE FINISHED GRADE ALLOWED IN THIS AREA. NO OTHER OBSTRUCTION ALLOWED UNLESS APPROVED BY THE CITY TRANSPORTATION ENGINEER.

FLUSH DECORATIVE PAVING, DECOMPOSED GRANITE, AND GROUND COVER LESS THAN 12" IN HEIGHT. ALL LANDSCAPE AND HARDSCAPE MATERIAL, AND OTHER DECORATIONS SHALL BE SUBMITTED FOR APPROVAL TO THE CITY TRANSPORTATION ENGINEER.

POSTED SPEED	RIGHT TURN ONTO THRU D_1	LEFT TURN ONTO THRU D_2	LEFT TURN FROM THRU D_3
30	310	400	290
35	360	470	340
40	410	530	380
45	460	600	430

DETAIL NO. **C-246** NTS

CITY OF CHANDLER STANDARD DETAIL

SIGHT DISTANCE FOR ARTERIAL AND COLLECTOR STREETS

APPROVED: _____ CITY ENGINEER

DATE: 01-27-11

DETAIL NO. **C-246** NTS

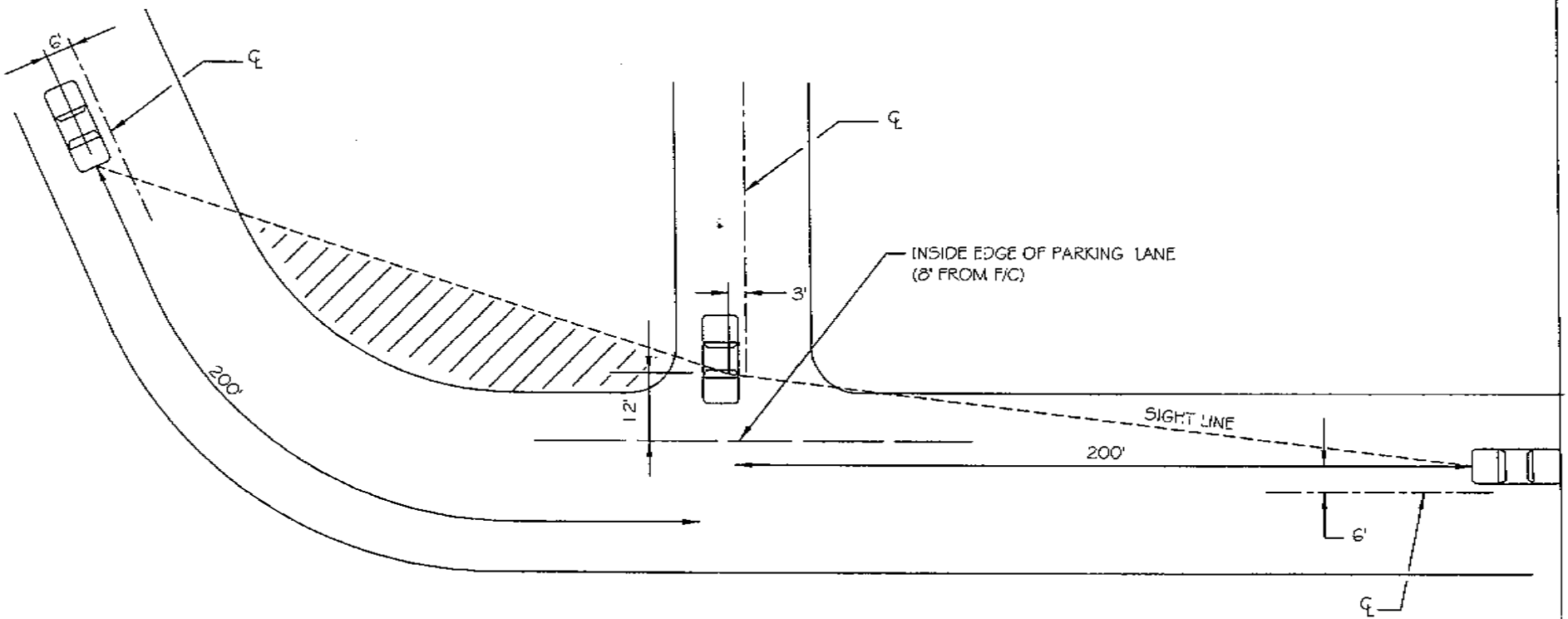

NOTE:

THIS STANDARD APPLIES ONLY TO DRIVEWAY AND CROSS-STREET ENTRIES ONTO STREETS WITH A 25 MPH SPEED LIMIT AND ON-STREET PARKING. ONCOMING VEHICLE MUST BE VISIBLE TO DRIVER OF ENTERING VEHICLE FOR AT LEAST 200 FEET FROM INTERSECTION, MEASURED ALONG PATH OF ONCOMING VEHICLE. NO GROUND COVER, SHRUBS, FLOWERS, MOUNDS, WALLS OR STRUCTURES OVER 24 INCHES IN HEIGHT ALLOWED ON STREET SIDE OF SIGHT LINE. TREES MUST BE TRIMMED TO 6 FEET ABOVE GROUND ON STREET SIDE OF SIGHT LINE.

DETAIL NO. C-247 NTS	CITY OF CHANDLER STANDARD DETAIL	**SIGHT DISTANCE FOR LOCAL STREETS**	APPROVED: _____ CITY ENGINEER DATE: 01-27-11	DETAIL NO. C-247 NTS.

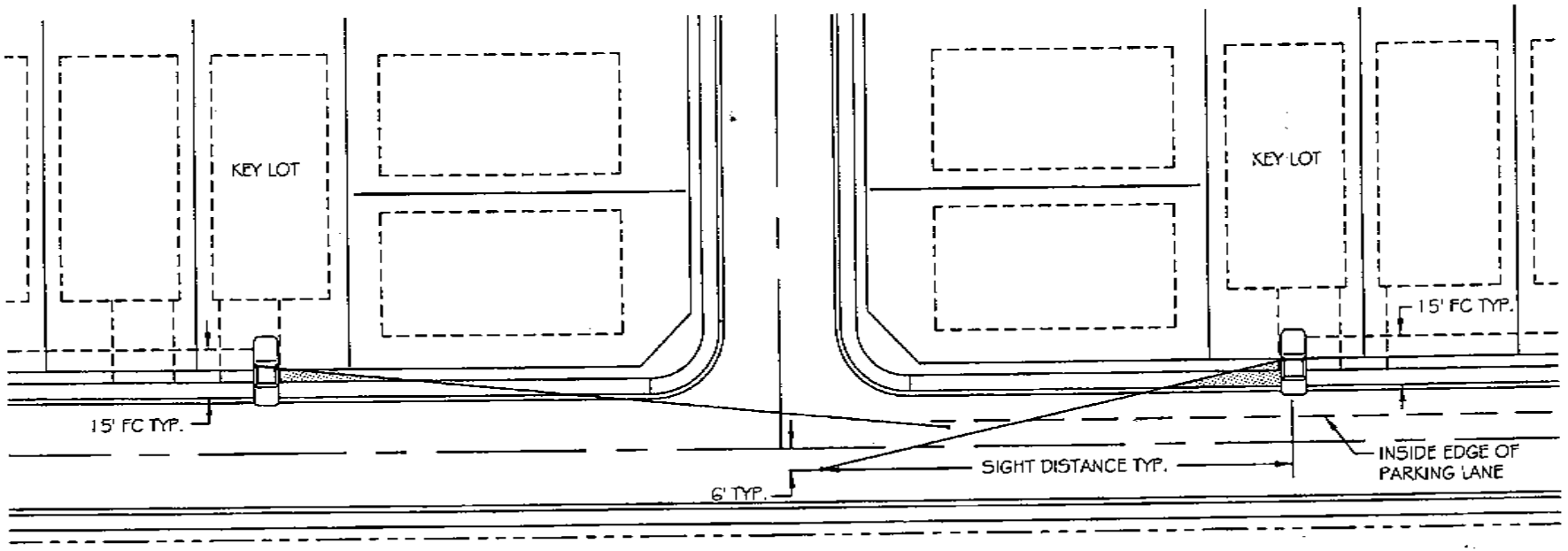

NOTES:

DRIVEWAY ON KEY LOTS NEED TO BE PLACED ON FAR SIDE OF LOT FROM REAR FENCE OF CORNER LOT.

NO STRUCTURES OR LANDSCAPING ABOVE 24" IN HEIGHT ALLOWED IN THIS AREA EXCEPT TREES WITH BRANCHES NOT LESS THAN 6' ABOVE THE GROUND.

DESIGN SPEED	SIGHT DISTANCE
25 MPH	200 FEET

DETAIL NO. **C-248** NTS	CITY OF CHANDLER STANDARD DETAIL	**KEY LOT SIGHT DISTANCE**	APPROVED: Roy A. Tatlow CITY ENGINEER DATE: 11-19-99	DETAIL NO. **C-248** NTS

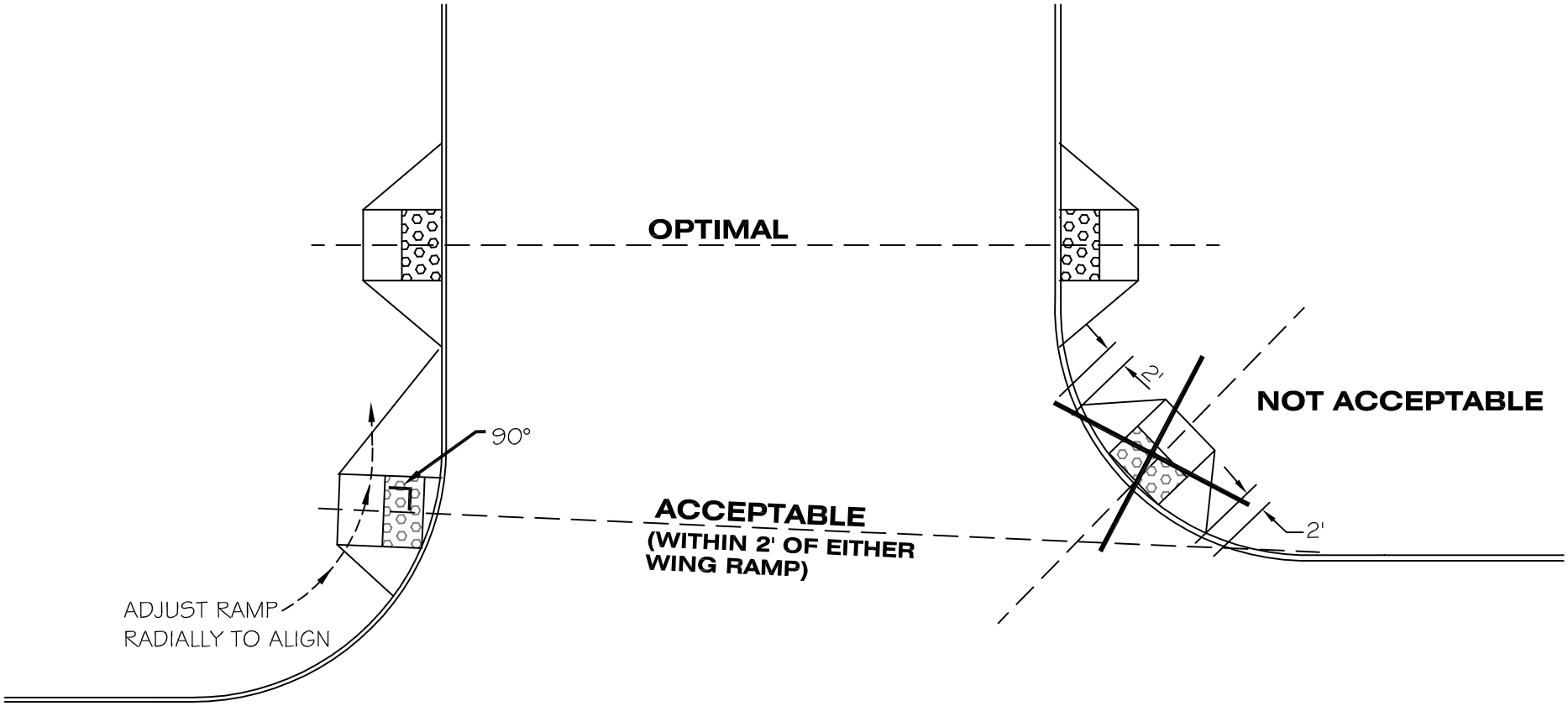

NOTES:

1. ALL RAMPS AND TRUNCATED DOMES SHALL BE ALLIGNED SUCH THAT A LINE DRAWN PERP. TO THE DOMES ALIGNS WITH THE CENTER WITH THE APPOSING RAMP (OPTIMAL). IN NO CASE SHALL SAID LINE BE GREATER THAN 2' FROM EITHER WING RAMP.
2. REFER TO TABLE IN TDM #4, STREET DESIGN AND ACCESS MANUAL FOR PROPER RAMP SELECTION.
3. REFER TO THIS PROJECTS APPROVED PEDESTRIAN ROUTING PLAN FOR RAMP LOCATION.

DETAIL NO. C-249 NTS	CITY OF CHANDLER STANDARD DETAIL	**ACCESSIBLE RAMP ALIGNMENT**	APPROVED: _____ CITY ENGINEER DATE: 02/09/12	DETAIL NO. C-249 NTS

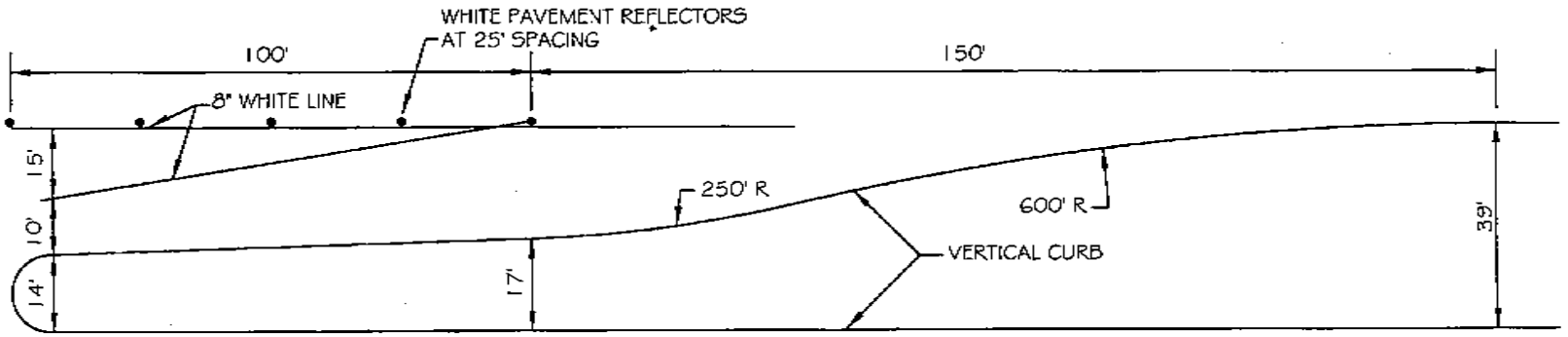

ALL WIDTHS ARE TO FACE OF CURB OR CENTER OF LANE LINE

DETAIL NO. **C-250** NTS	CITY OF CHANDLER STANDARD DETAIL	**LEFT TURN BAY IN 40' MEDIAN DESIGN**	APPROVED: CITY ENGINEER DATE: 2/26/07	DETAIL NO. **C-250** NTS

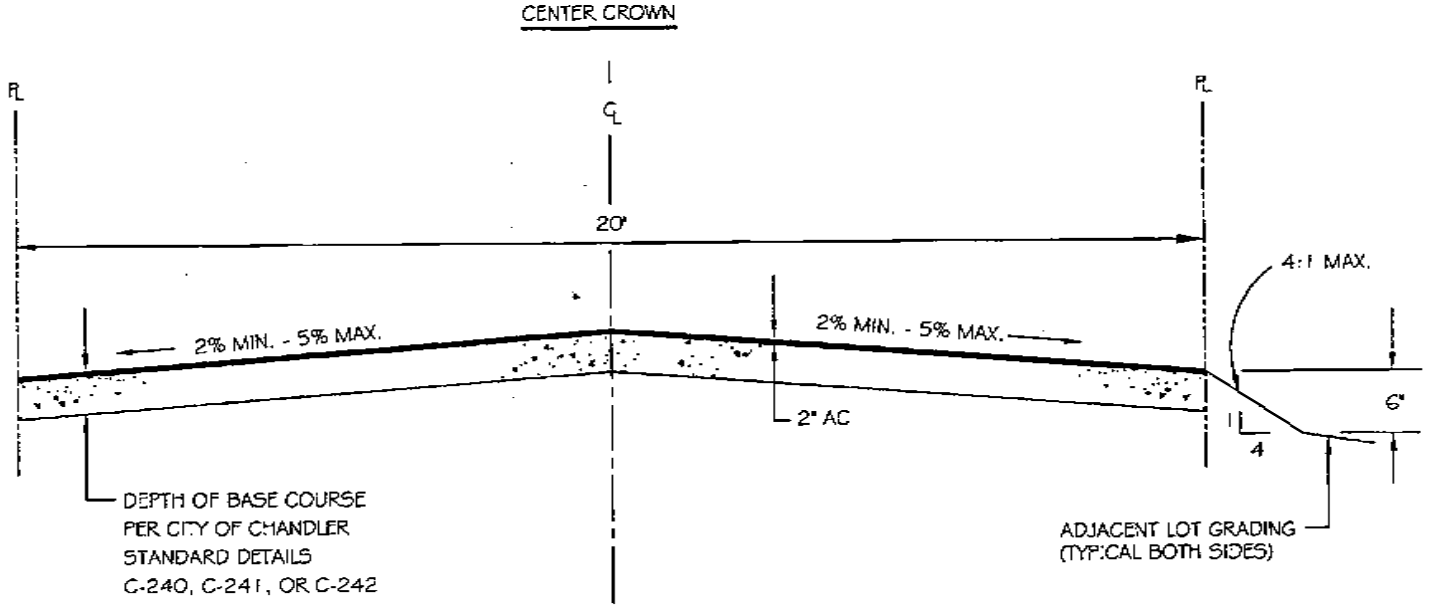

NOTES:

A. ASPHALTIC CONCRETE:
   1. MATERIAL: TYPE R19 EVAC MIX.
   2. COMPACTION TO BE TESTED IN ACCORDANCE WITH AASHTO T-99 METHOD A, AND T-191 OR ASTM D-2922 AND D-3017.
B. AGGREGATE BASE COURSE: CONFORMING TO SECTION 702.2 MAG STANDARD SPECIFICATIONS.
C. SUBGRADE PREPARATION: CONFORMING TO SECTION 301 MAG STANDARD SPECIFICATIONS

DETAIL NO. C-251 NTS	CITY OF CHANDLER STANDARD DETAIL	**ALLEY PAVEMENT LOT DRAINAGE FROM ALLEY**	APPROVED: _____ CITY ENGINEER DATE: 01/08/09	DETAIL NO. C-251 NTS

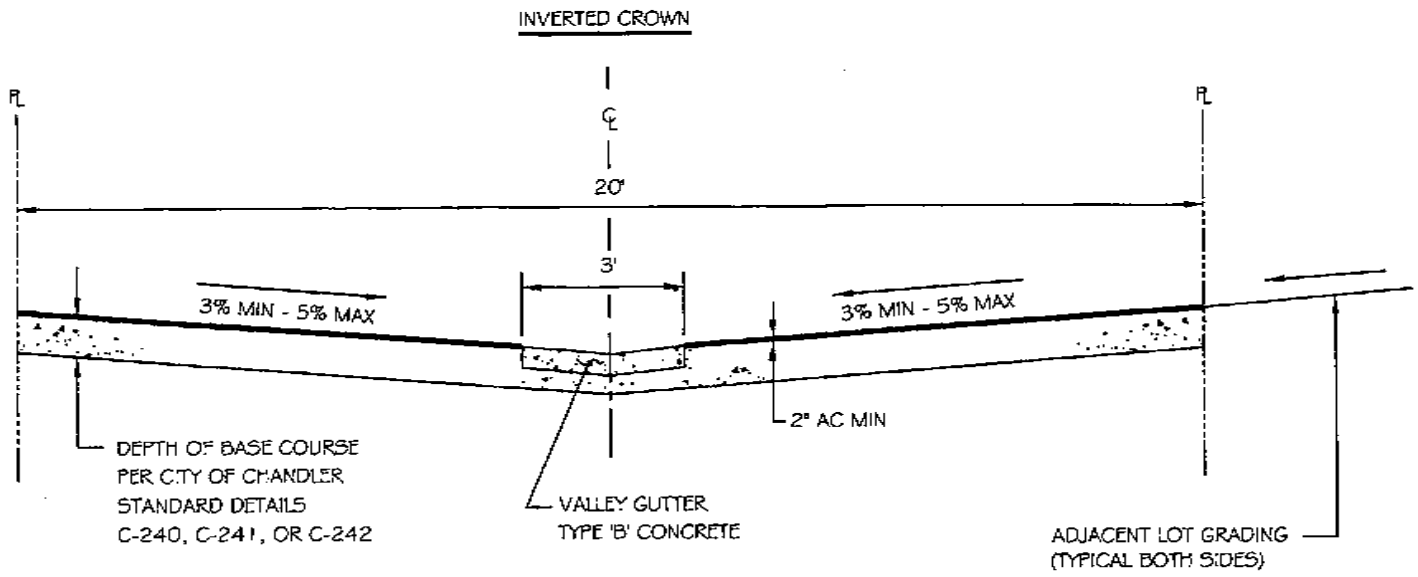

NOTES:

A. ASPHALTIC CONCRETE:
   1. MATERIAL: TYPE R19 EVAC MIX.
   2. COMPACTION TO BE TESTED IN ACCORDANCE WITH AASHTO T-99 METHOD A, AND T-191 OR ASTM D-2922 AND D-3017.
B. AGGREGATE BASE COURSE: CONFORMING TO SECTION 702.2 MAG STANDARD SPECIFICATIONS.
C. SUBGRADE PREPARATION: CONFORMING TO SECTION 301 MAG STANDARD SPECIFICATIONS

DETAIL NO. C-252 NTS	CITY OF CHANDLER STANDARD DETAIL	**ALLEY PAVEMENT LOT DRAINAGE TO ALLEY**	APPROVED: _____ CITY ENGINEER DATE: 01/08/09	DETAIL NO. C-252 NTS

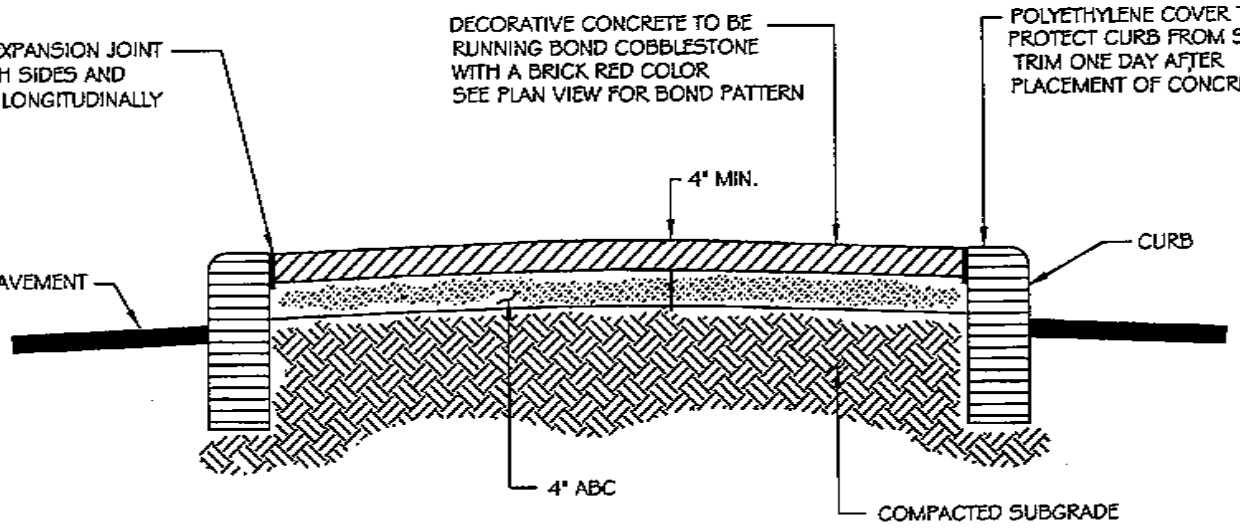

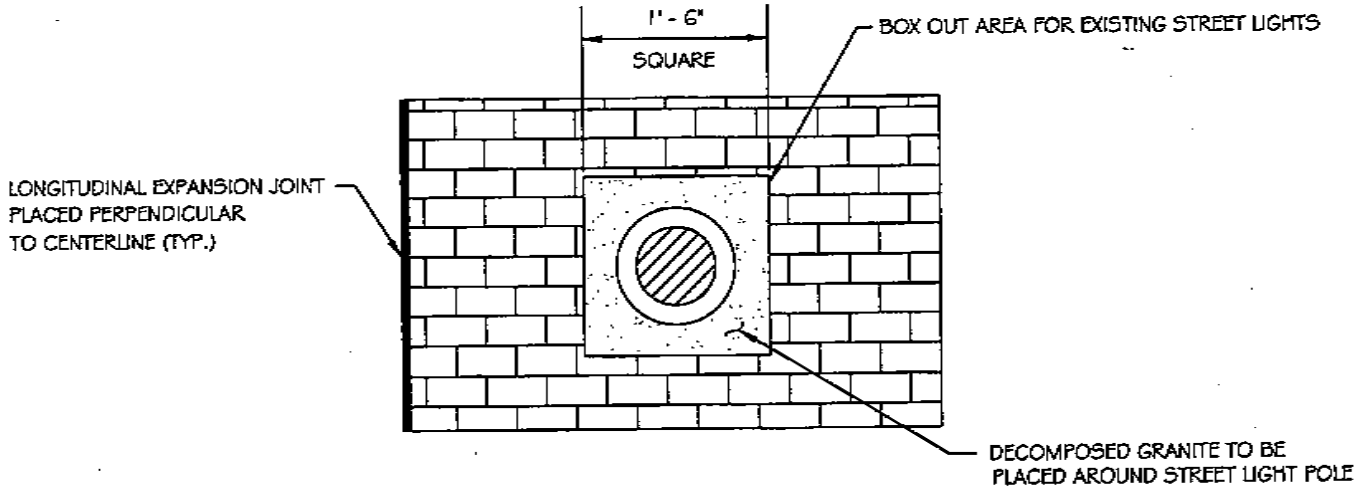

PLAN VIEW

C-253 **REPLACES** **37A**	CITY OF CHANDLER STANDARD DETAIL	**DECORATIVE CONCRETE**	APPROVED: Bryan D. Patterson CITY ENGINEER DATE: 11-19-99	DETAIL NO. **C-253** NTS

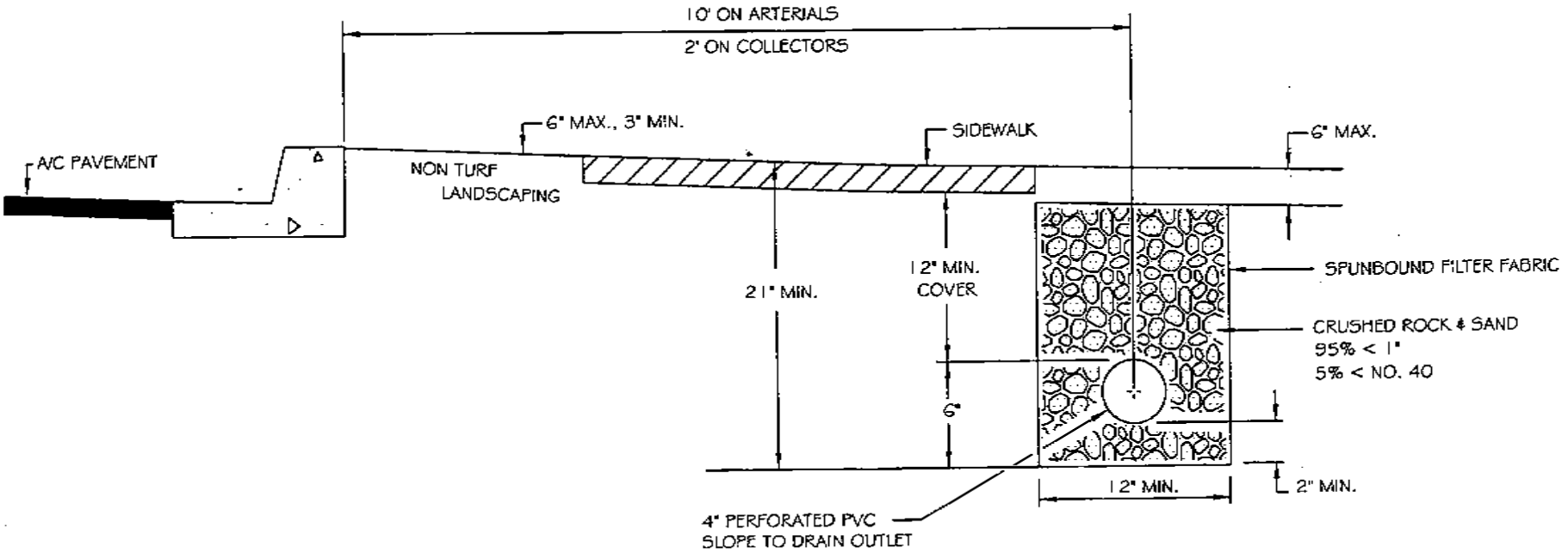

NOTES:

1. THIS DETAIL APPLIES ONLY TO AREAS THAT ARE TURF LANDSCAPED.
2. DRAIN MUST BE DESIGNED TO DISCHARGE TO RETENTION BASIN, STORM DRAIN OR DRYWELL.
3. MINIMUM SLOPE SHALL BE 0.2%.

DETAIL NO. C-254 NTS	CITY OF CHANDLER STANDARD DETAIL	**ARTERIAL/COLLECTOR ROADWAY LANDSCAPE DRAINAGE**	APPROVED: CITY ENGINEER DATE: 11-19-99	DETAIL NO. C-254 NTS

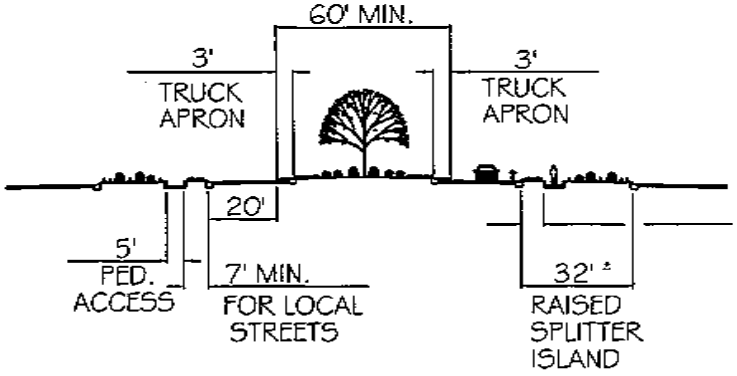

SECTION AA
THROUGH SPLITTER/CENTER ISLAND

GROUND COVER, FLOWERS, AND GRANITE LESS THAN 24" (MATURE) IN HEIGHT, OR TREES TRIMMED TO 6' CLEARANCE ABOVE FINISHED GRADE ALLOWED IN THIS AREA.

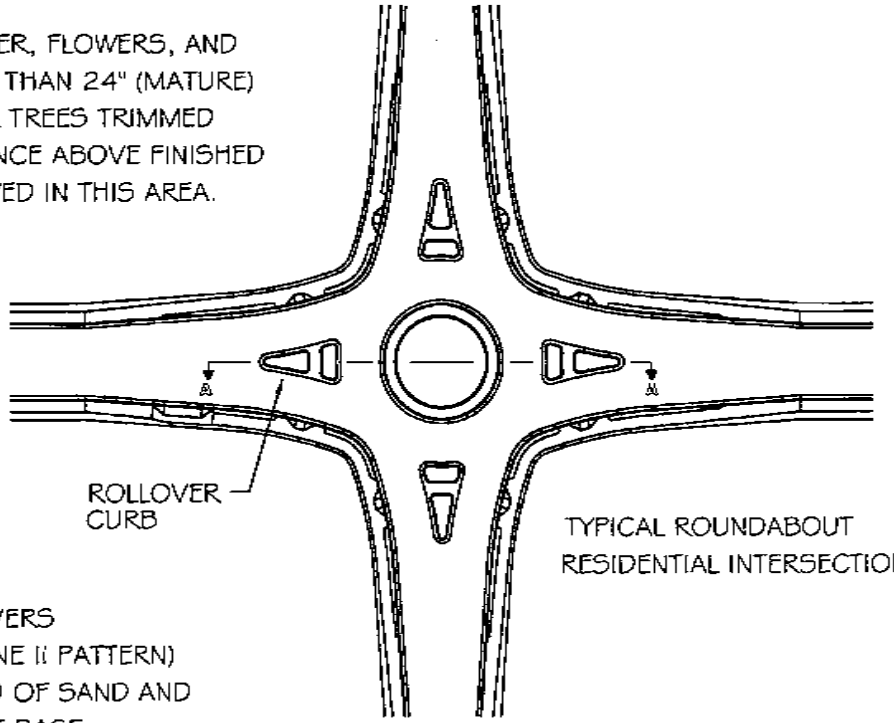

TYPICAL ROUNDABOUT
RESIDENTIAL INTERSECTION

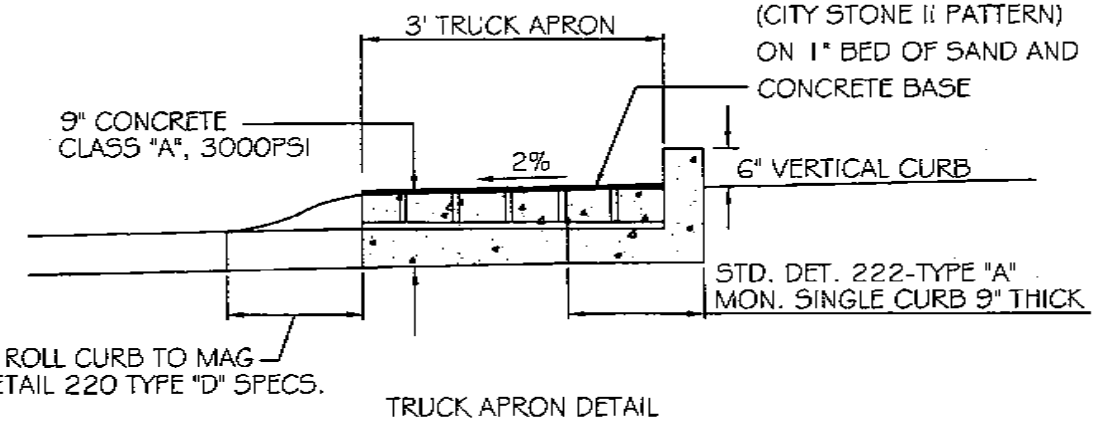

TRUCK APRON DETAIL

RESIDENTIAL COLLECTOR
RESIDENTIAL LOCAL
TYPICAL ROUNDABOUT
CENTER/SPLITTER ISLAND DETAIL
TRUCK APRON DETAIL

DETAIL NO. C-255 NTS	CITY OF CHANDLER STANDARD DETAIL	**TYPICAL ROUNDABOUT**	APPROVED: CITY ENGINEER DATE: 2/26/07	DETAIL NO. C-255 NTS

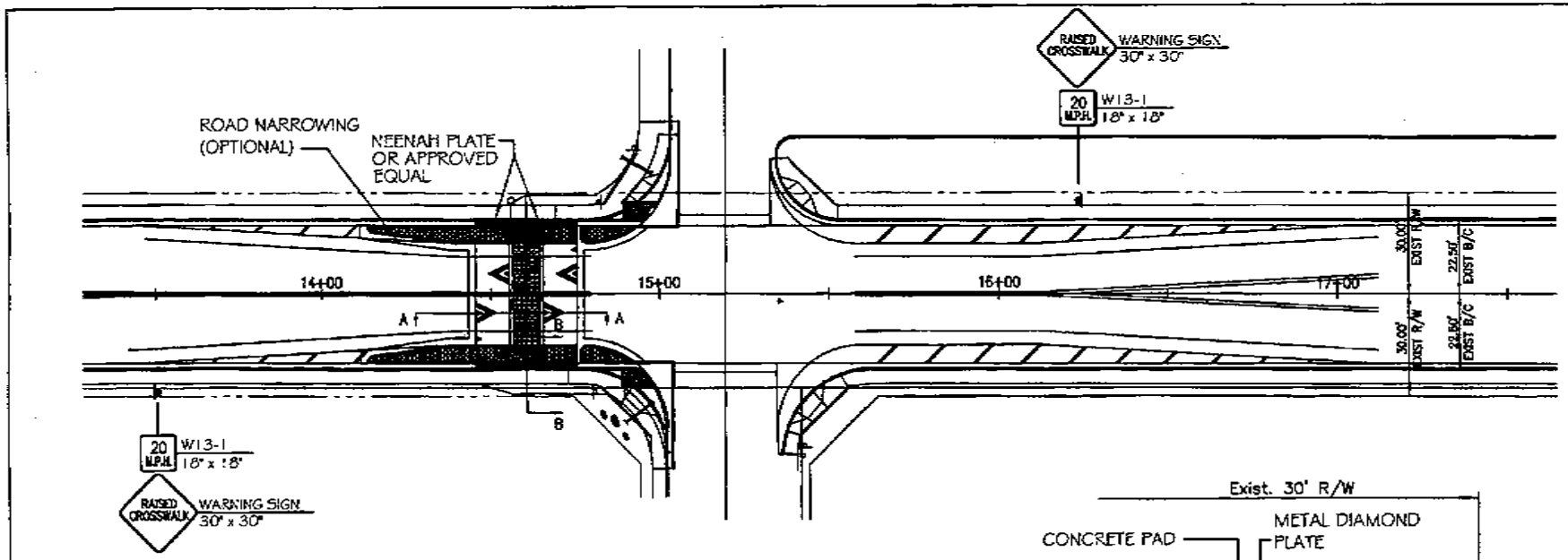

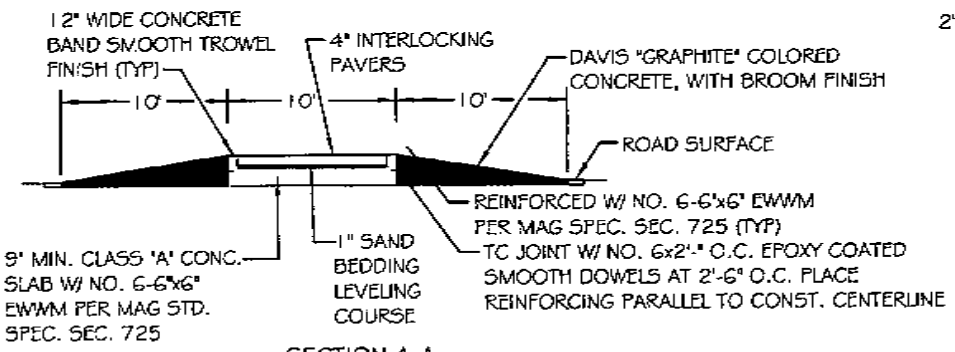

SECTION A-A
NTS

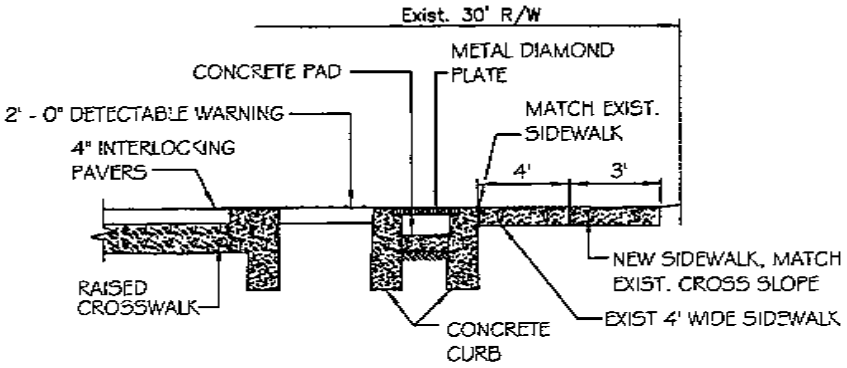

SECTION B-B
NTS

NOTES:

1. RETROFIT DESIGN SHOWN. NEW INSTALLATIONS MAY REQUIRE CURB, GUTTER, AND DRAINAGE FACILITIES TO BE DIFFERENT THAN SHOWN.
2. DETECTABLE WARNING SHALL CONSIST OF RAISED TRUNCATED DOMES MANUFACTURED BY CAST IN TAC, TEKWAY DOME TILES WITH ANCHOR SYSTEM, RAMP DOME SYSTEMS WITH METAL FRAME, ADA SOLUTIONS HEAVY DUTY COMPOSITE WET SET REPLACEABLE TILES WITH ANCHORS, OR APPROVED EQUAL. COLOR SHALL BE TERRACOTTA. INSTALLATION SHALL BE IN ACCORDANCE WITH MANUFACTURER'S RECOMMENDATIONS.

DETAIL NO. C-256 NTS	CITY OF CHANDLER STANDARD DETAIL	**TYPICAL RAISED CROSSWALK**	APPROVED: _____ CITY ENGINEER DATE: 01/05/09	DETAIL NO. C-256 NTS

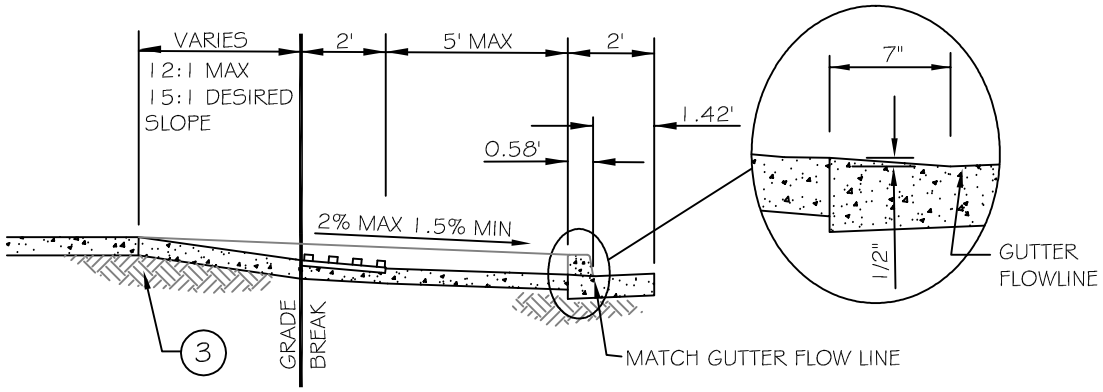

SECTION A-A

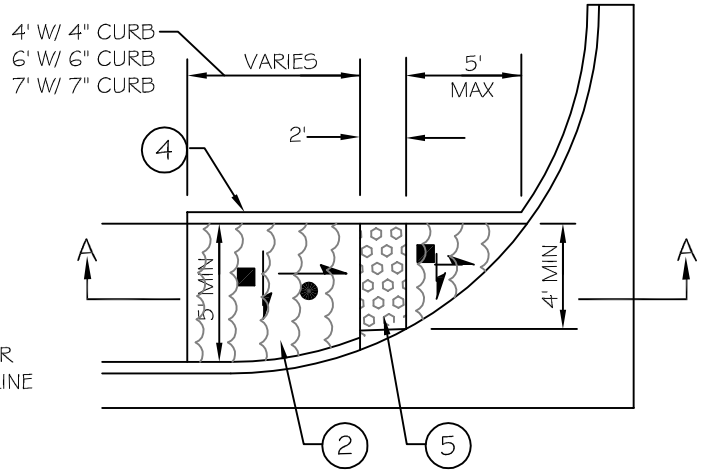

PLAN VIEW-ATTACHED SIDEWALK

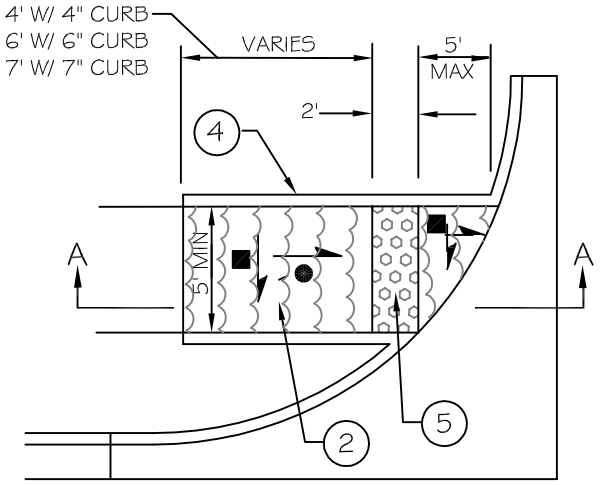

PLAN VIEW-DETACHED SIDEWALK

NOTES:

1. CLASS "B" CONCRETE PER MAG SECTION 725.
2. LIMITS OF HEAVY ROUGH BROOM FINISH.
3. SUBGRADE PREPARATION PER MAG SECTION 301.
4. 6" SINGLE CURB PER MAG STD. DTL. 222.
5. DETECTABLE WARNING PER APPROVED PRODUCTS LIST.

LEGEND:

12:1 MAXIMUM SLOPE, 15:1 DESIRED SLOPE

2% MAXIMUM SLOPE, 1.5% MINIMUM SLOPE

DETAIL NO. C-257 NTS	CITY OF CHANDLER STANDARD DETAIL	SIDEWALK IN-LINE RAMP DETAIL FOR RETURN TYPE DRIVEWAY	APPROVED: CITY ENGINEER DATE: 02/09/12	DETAIL NO. C-257 NTS

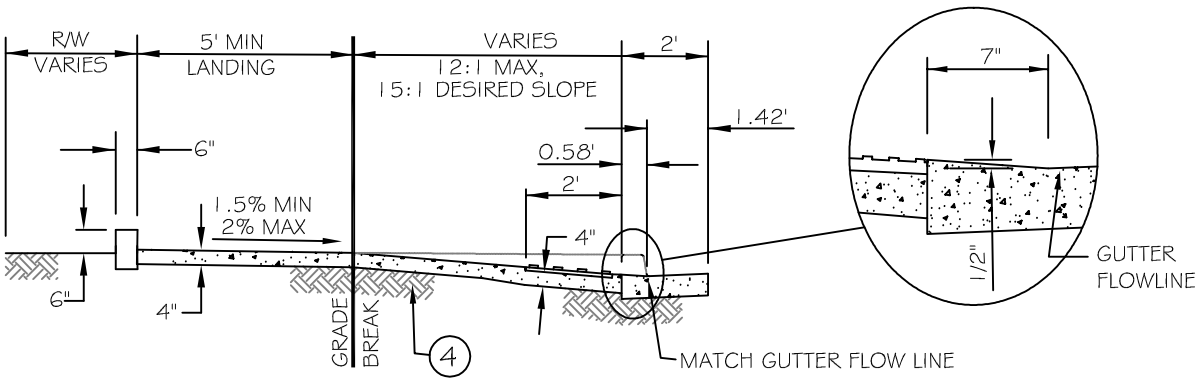

SECTION A-A

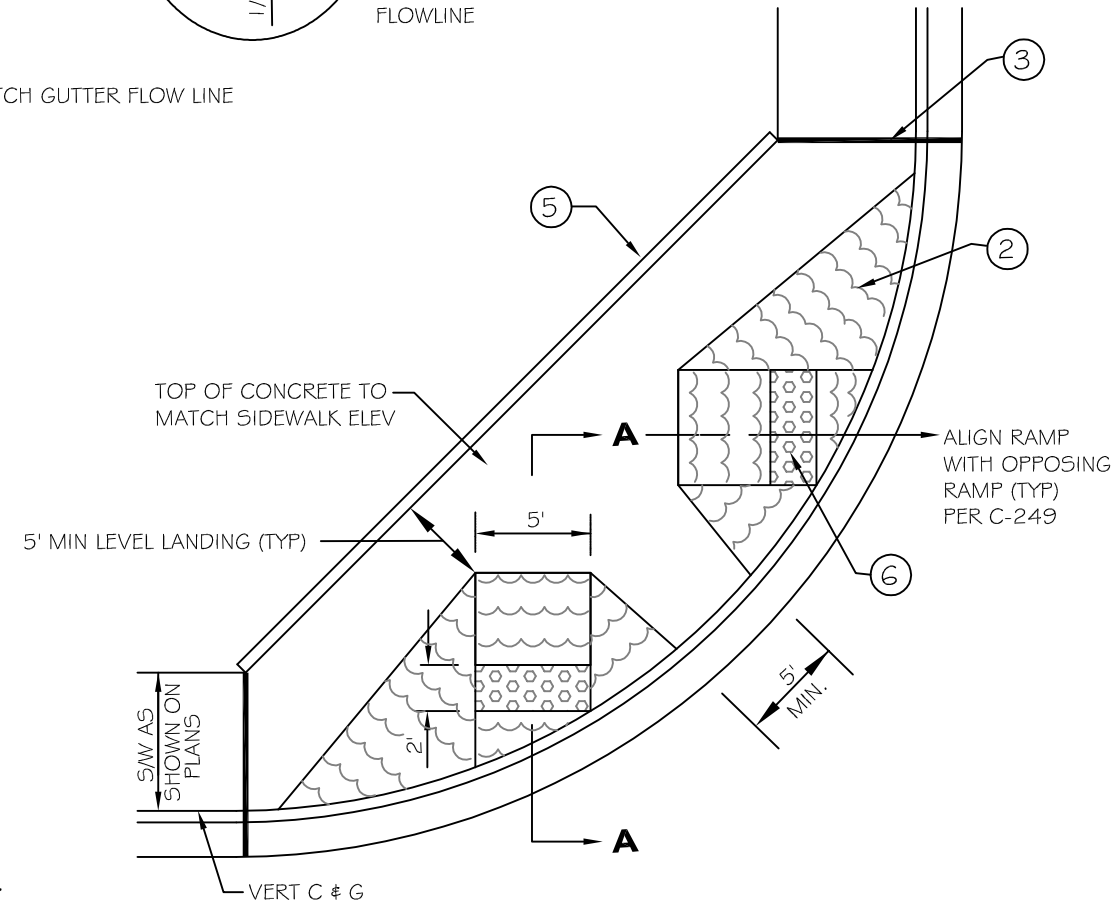

NOTES:

1. CLASS "B" CONCRETE PER MAG SECTION 725.
2. LIMITS OF HEAVY ROUGH BROOM FINISH.
3. EXPANSION JOINTS PER MAG SECTION 729.
4. SUBGRADE PREPARATION PER MAG SECTION 301.
5. 6" SINGLE CURB PER MAG STD. DTL. 222.
6. DETECTABLE WARNING PER APPROVED PRODUCTS LIST.

DETAIL NO. C-258 NTS	CITY OF CHANDLER STANDARD DETAIL	**DIRECTIONAL SIDEWALK RAMP**	APPROVED: CITY ENGINEER DATE: 02/09/12	DETAIL NO. C-258 NTS

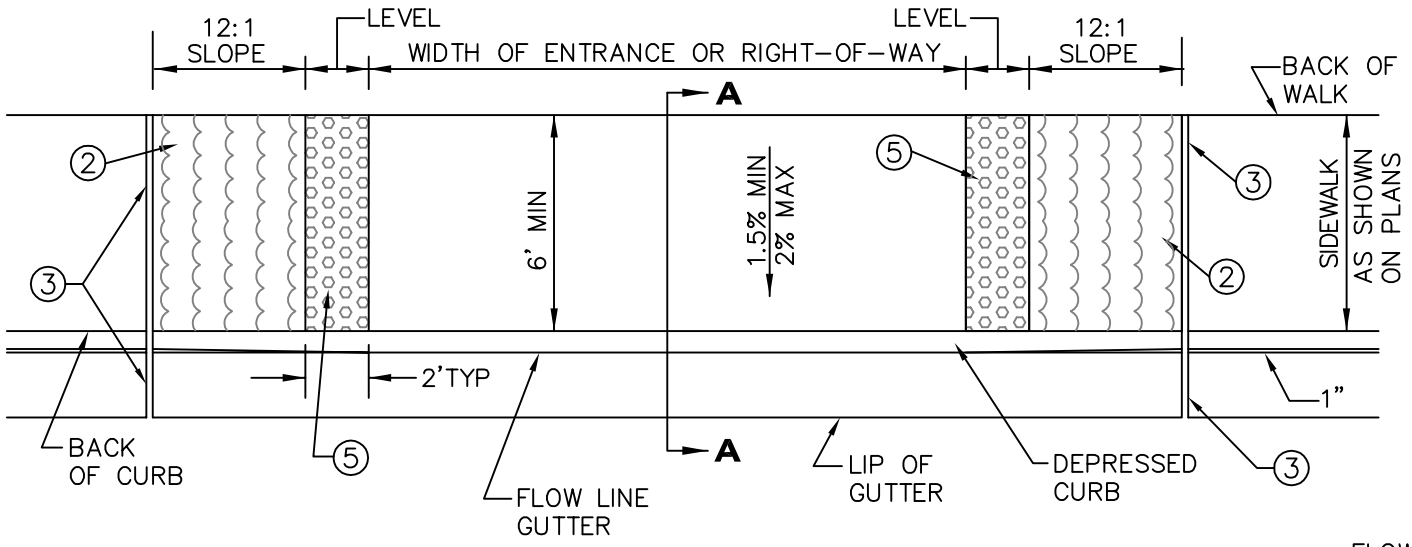

ELEVATION

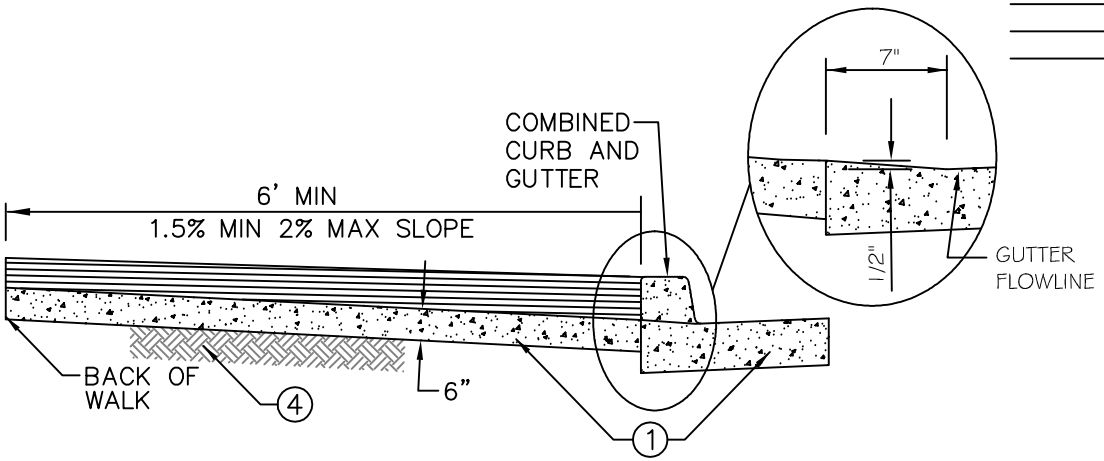

SECTION A-A

NOTES:

1. CLASS "B" CONCRETE PER MAG SECTION 725.
2. LIMITS OF HEAVY ROUGH BROOM FINISH.
3. EXPANSION JOINTS PER MAG SECTION 729.
4. SUBGRADE PREPARATION PER MAG SECTION 301.
5. DETECTABLE WARNING PER APPROVED PRODUCTS LIST.

DETAIL NO. C-259 NTS	CITY OF CHANDLER STANDARD DETAIL	**MODIFIED ENTRANCE**	APPROVED: CITY ENGINEER DATE: 02/09/12	DETAIL NO. C-259 NTS

WATER SERIES

C-300 TO C-321

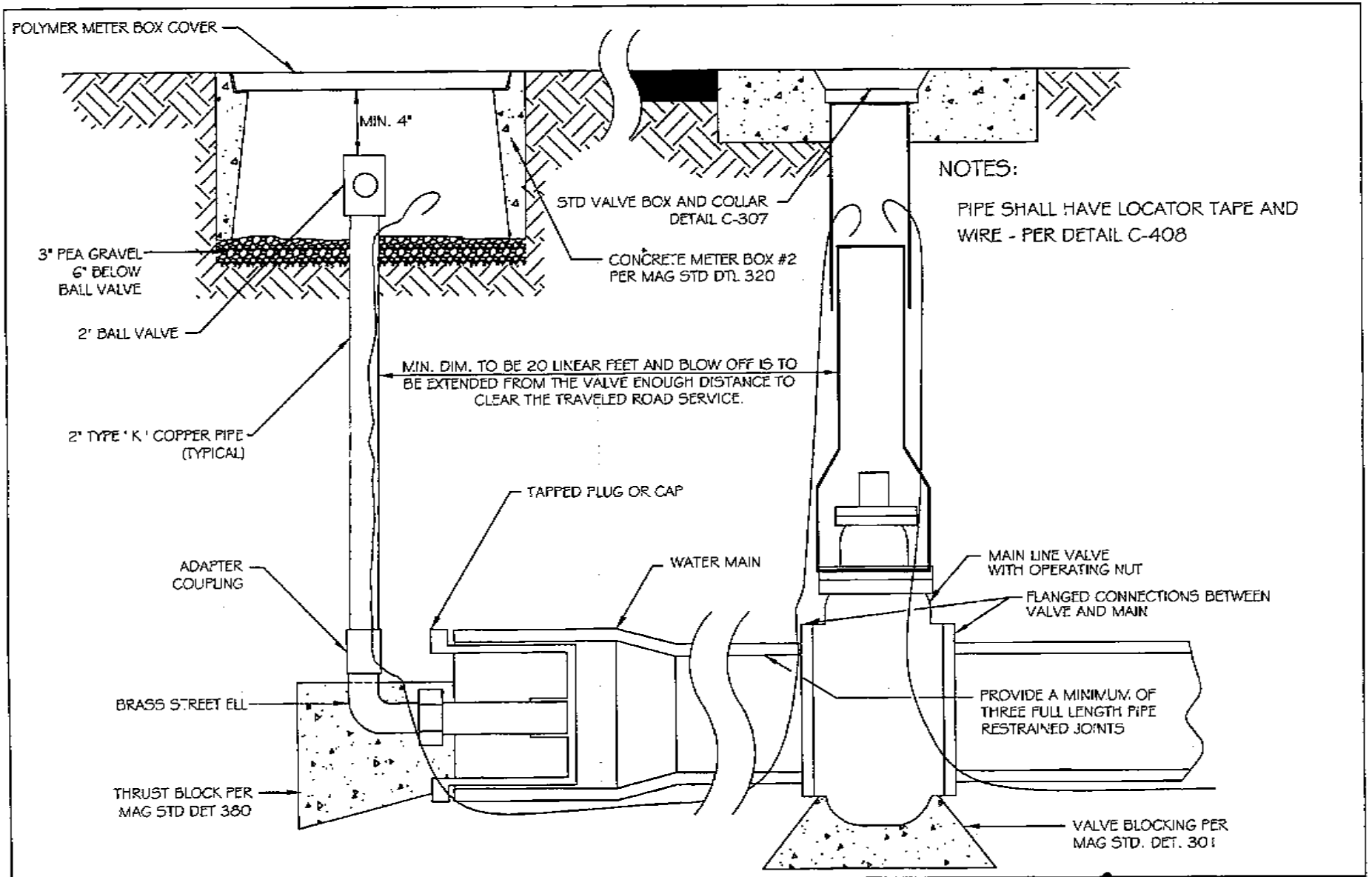

NOTES:

PIPE SHALL HAVE LOCATOR TAPE AND WIRE - PER DETAIL C-408

DETAIL NO. C-300 NTS	CITY OF CHANDLER STANDARD DETAIL	**FLUSHING PIPE ASSEMBLY WITH BALL VALVE**	APPROVED: CITY ENGINEER DATE: 01/08/09	DETAIL NO. C-300 NTS

CAUTION: BEFORE SERVICES ARE INSTALLED, DRIVEWAY LOCATIONS SHOULD BE VERIFIED AND THE SERVICES CONSTRUCTED TO AVOID CONFLICTS.

NOTES:

1. TYPE 'K' RIGID COPPER SERVICE (1-1/2" & LARGER) SHALL HAVE SWEAT JOINTS. 1" SERVICES SHALL BE TYPE K SOFT COPPER WITH FLARED FITTINGS. COMPRESSION FITTINGS ARE NOT ALLOWED.
2. CONTRACTOR SHALL BACKFILL AND COMPACT THE TRENCHES PER MAG STANDARD SPECIFICATION TABLE 601-2.
3. CITY OF CHANDLER TO SET WATER METERS WHEN ORDERED BY OWNER/DEVELOPER. THE CITY DOES NOT PROVIDE ANY PARTS NEEDED PRIOR TO, OR AFTER, METER INSTALLATION. CONTRACTOR SHALL PROVIDE BRASS BOLTS FOR LARGER THAN 1" METERS.
4. ANGLE BALL METER VALVE SHALL BE FORD BA23-342W, BA23-444W, BFARW13, BFA13, OR APPROVED EQUAL. SET 1" BELOW TOP OF THE COVER.
5. METER BOX SHALL BE SET WITHIN CITY RIGHT OF WAY, OR DEDICATED WATERLINE EASEMENT. TOP OF BOX SHALL BE FLUSH WITH TOP OF SIDEWALK, OR IN CASES OF SLOPING YARDS, FLUSH WITH DRIVE PERPENDICULAR TO STREET.
6. LONG DIMENSION OF METER AND BOX SHALL BE PERPENDICULAR TO STREET.
7. NO METER SHALL BE SET IN ANY CONCRETE OR PERMANENT STRUCTURE.
8. METER BOX PER MAG STD. DET. 320, CONCRETE OR POLYMER EQUAL.
9. METERS BOXES IN PARALLEL INSTALLATION SHALL HAVE A MINIMUM 4" CLEAR ON THE SIDES. WHERE BACKFLOW ASSEMBLIES ARE SPECIFIED, EACH METER SHALL HAVE ITS OWN BACKFLOW ASSEMBLY.
10. BOX COVER (LID) SHALL BE POLYMER CONCRETE OR MODIFIED POLYETHYLENE WITH METER READER ANTENNA HOLE. BOX COVERS FOR RECLAIMED WATER SERVICES SHALL BE PAINTED PANTONE 512 PURPLE. COVER SHALL IDENTIFY "CITY OF CHANDLER" AND SPECIFY "WATER" OR "RECLAIMED WATER". COVERS MUST PROPERLY FIT IN THE #2 AND #4 CONCRETE BOXES IN ACCORDANCE WITH MAG CONCRETE METER BOX SPECIFICATIONS.

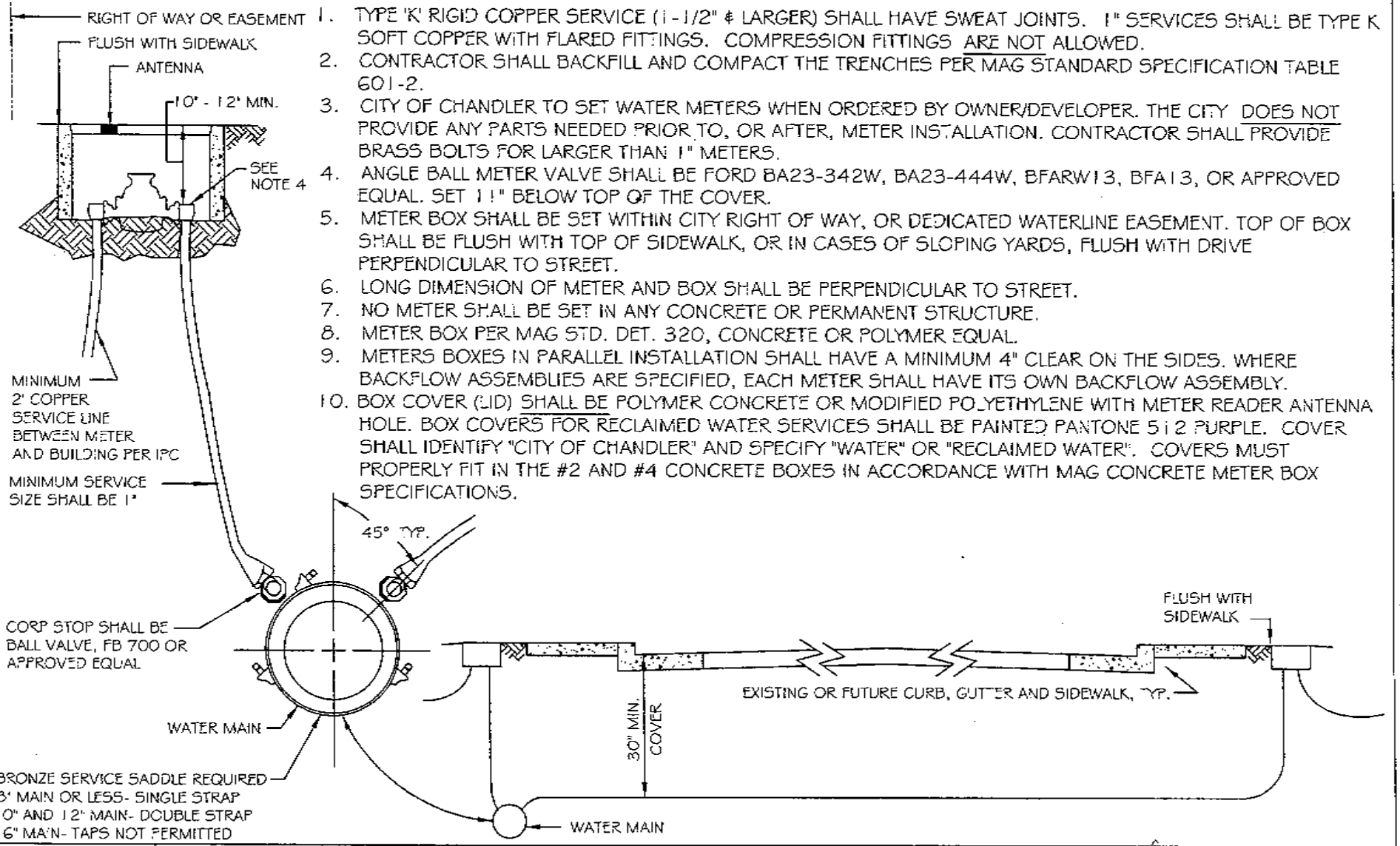

DETAIL NO. C-301 NTS	CITY OF CHANDLER STANDARD DETAIL	**WATER SERVICE INSTALLATION**	APPROVED: CITY ENGINEER DATE: 01/14/10	DETAIL NO. C-301 NTS

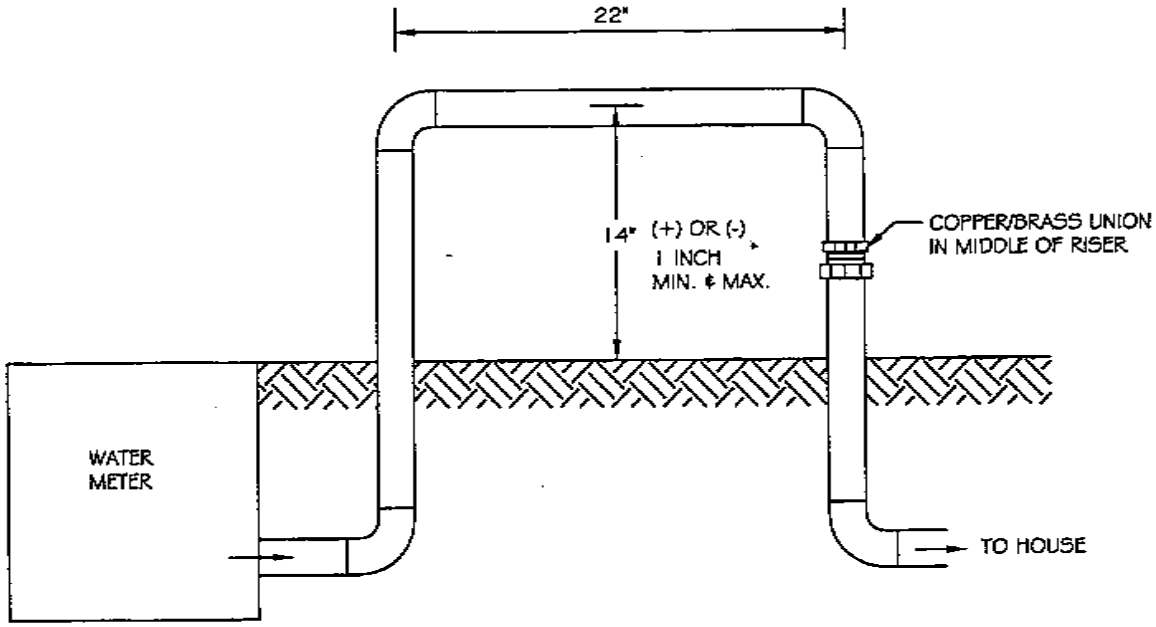

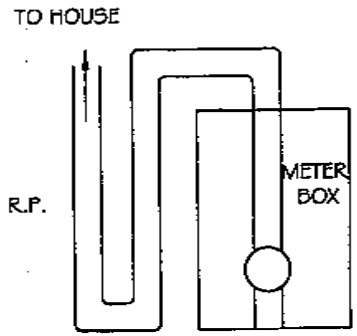

ALTERNATE INSTALLATION

SEE NOTE 8

NOTES:

1. ALL PIPE/FITTINGS TO BE TYPE 'K' RIGID COPPER.
2. INSTALL COPPER PIPE LOOP DIRECTLY BEHIND, DOWNSTREAM OF WATER METER/WATER METER BOX.
3. COPPER LOOP TO BE 14 INCHES ABOVE GRADE PLUS OR MINUS ONE INCH.
4. COPPER LOOP TO BE LEVEL MEASURED WITH CONTRACTOR'S BUBBLE LEVEL.
5. TOP OF LOOP TO BE ONE SOLID PIECE OF PIPE. NO COUPLINGS OR JOINTED PIPE.
6. COMPRESSION TYPE FITTINGS ARE NOT ALLOWED.
7. A COPPER/BRASS UNION TO BE INSTALLED IN MIDDLE OF DOWNSTREAM RISER.
8. COPPER LOOP MAY BE INSTALLED ADJACENT TO METER BOX ON A CASE BY CASE BASIS WITH A MAXIMUM OF 24 INCHES OF PIPE EXTENDED UPSTREAM OF COPPER LOOP TO ALLOW COPPER LOOP TO SIT ADJACENT TO METER/WATER BOX.
9. COPPER LOOP LENGTH TO BE 22 INCHES IN LENGTH MEASURED FROM CENTER TO CENTER OF EACH RISER PIPE.
10. THIS DETAIL IS TO BE USED IN CONJUNCTION WITH A RECLAIMED WATER SYSTEM.

C-302 **REPLACES** **103B**	CITY OF CHANDLER STANDARD DETAIL	**RESIDENTIAL BACKFLOW PREVENTION ASSEMBLY INSTALLATION - 1" OR UNDER**	APPROVED: Bryan D. Patterson CITY ENGINEER DATE: 11-17-99	DETAIL NO. **C-302** NTS

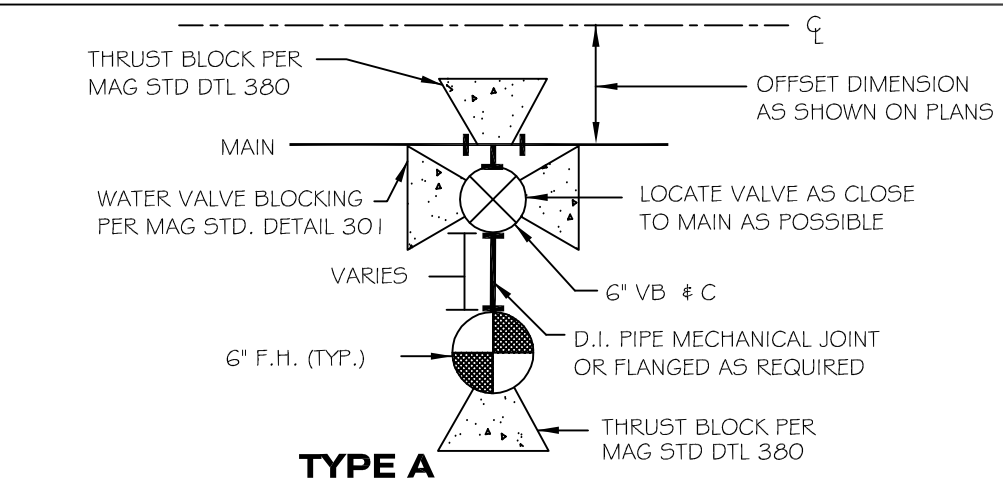

TYPE A

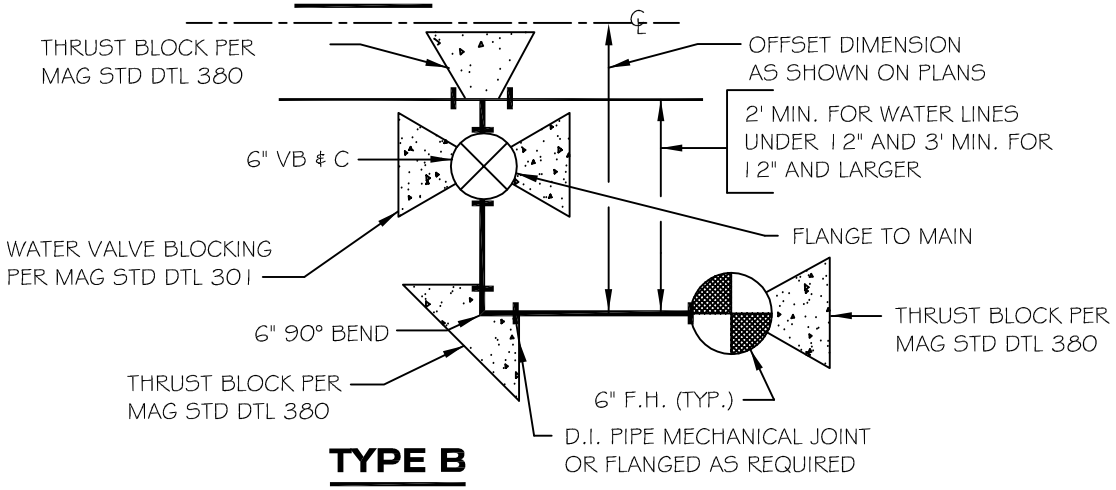

TYPE B

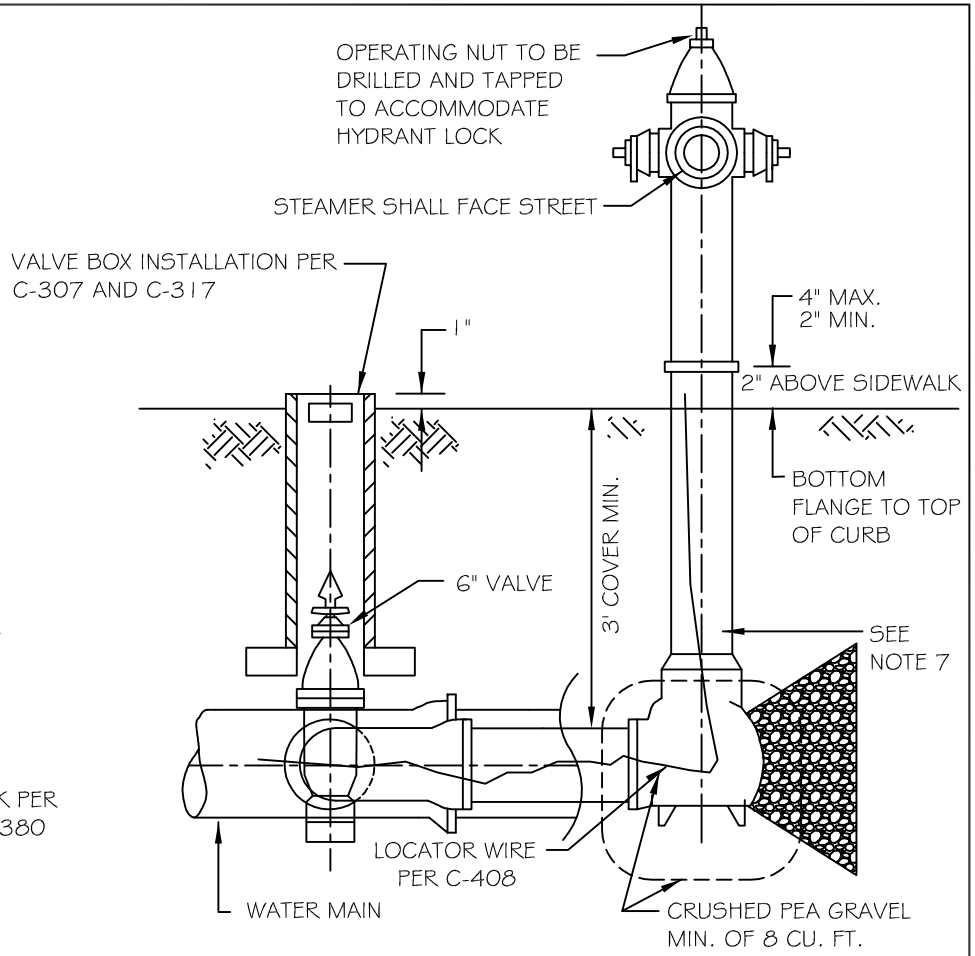

TYPICAL INSTALLATION

NOTES:

1. FIRE HYDRANT VALVES INCLUDING ALL FITTINGS & 45° BENDS SHALL BE RESTRAINED TO MAIN LINE TEE BY FLANGES.
2. CONNECTIONS SHALL BE 2-1/2" & 4-1/2" N.S. THREADS.
3. INSTALLATION OF HYDRANT SHALL INCLUDE INSTALLATION OF REFLECTOR ON ADJACENT STREET(S) PER MAG STD DTL 122.
4. FIRE HYDRANT SHALL BE LOCATED PER C-305 A MIN. OF 6' BEHIND FACE OF CURB, AND 12 INCHES BEHIND SIDEWALK, RIGHT OF WAY PERMITTING, AND INSTALLED SIX FEET BEYOND CURB RETURNS FOR HYDRANTS LOCATED AT INTERSECTIONS.
5. INSTALL FIRE HYDRANT LOCK PER C-304, PUBLIC HYDRANTS ONLY.
6. CAP CHAINS SHALL BE REMOVED AND THREADS GREASED WITH MANUFACTURER APPROVED HYDRANT GREASE.
7. A MAXIMUM EXTENSION OF 1'-0" MAY BE USED.

DETAIL NO. C-303 NTS	CITY OF CHANDLER STANDARD DETAIL	**FIRE HYDRANT**	APPROVED: _____ CITY ENGINEER DATE: 02/09/12	DETAIL NO. C-303 NTS

NOTES:

- (A) KEY WRENCH
- (B) SWIVEL HOUSING
- (C) ACTIVATOR LOCK
- (D) RETAINING BOLT
- (E) INNER BARREL
- (F) MATING COLLAR
- (G) HYDRANT OPERATING NUT

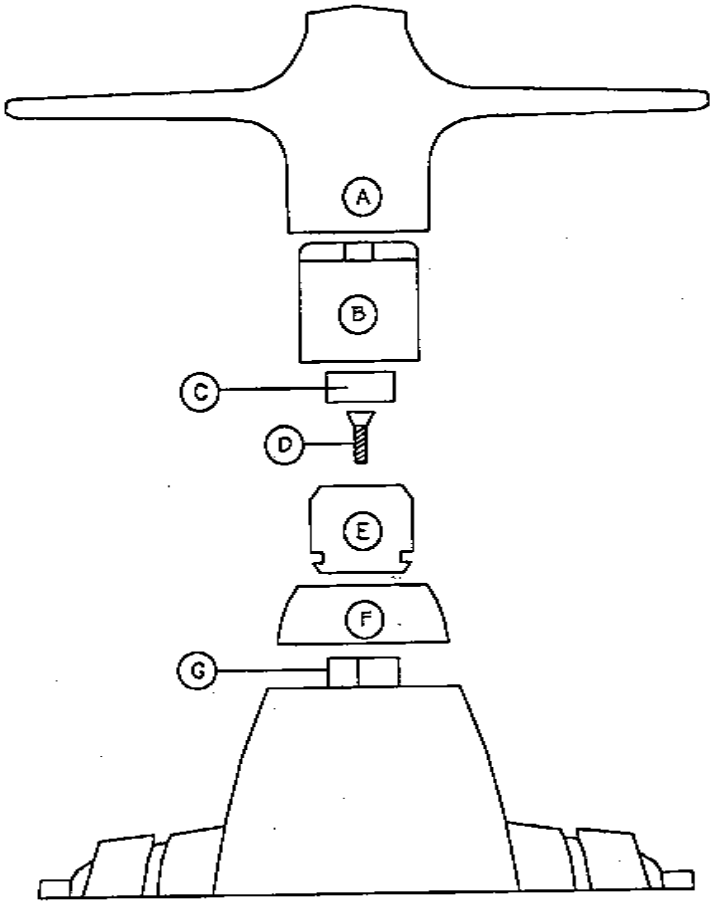

C-304 **REPLACES** **49A**	CITY OF CHANDLER STANDARD DETAIL	**FIRE HYDRANT LOCK**	APPROVED: CITY ENGINEER DATE: 11-19-99	DETAIL NO. **C-304** NTS

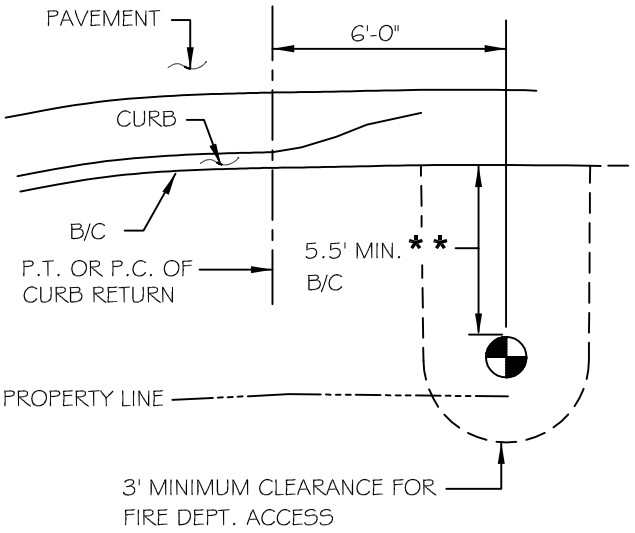

PARKWAY AREA, NO SIDEWALK

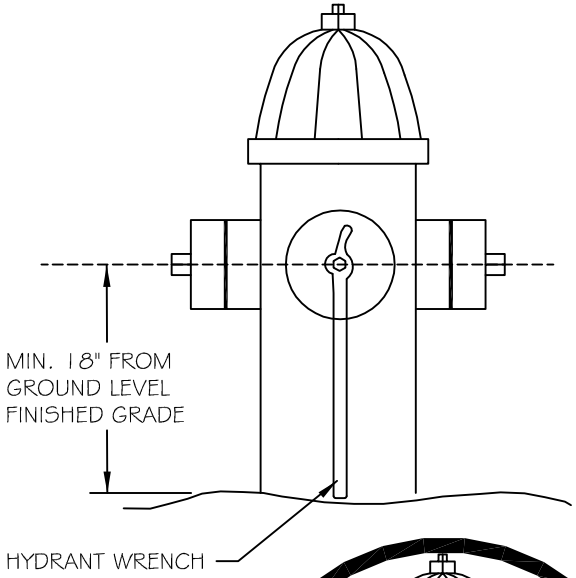

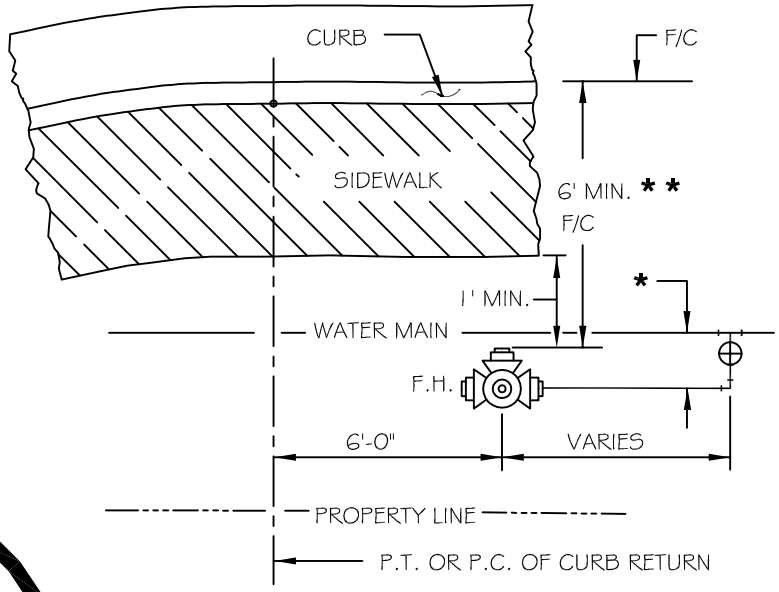

AREA WITH SIDEWALK

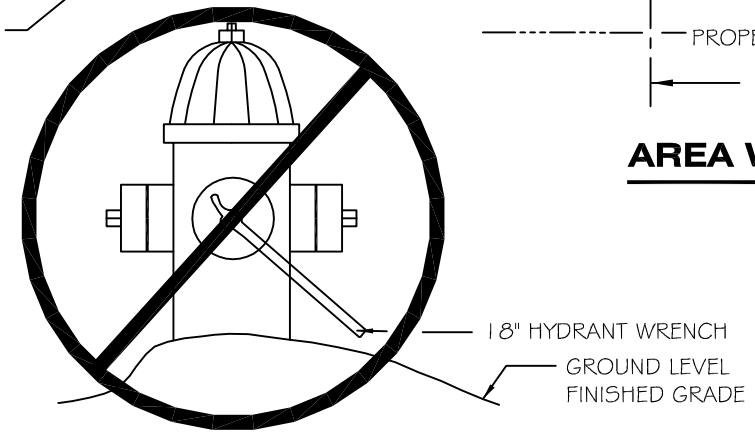

NOTES:

1. DIMENSION PER COC STANDARD DETAIL C-303.
2. COC STANDARD DETAIL C-303, TYPE B INSTALLATION SHOWN.
3. DIMENSIONS SHOWN ON APPROVED CONSTRUCTION DRAWINGS SUPERSEDE LOCATIONS SHOWN HERE.
4. OBSTRUCTIONS SUCH AS UTILITY POLES, STREET SIGNS, IRRIGATION BOXES, FENCES, ETC., MUST NOT BE PLACED BETWEEN CURB AND HYDRANT.
5. ON LOCATIONS IN MID BLOCK, THE FIRE HYDRANT WILL BE ALIGNED WITH A PROPERTY LINE AND 6' MINIMUM FROM DRIVEWAYS.
6. ALL FIRE HYDRANTS INSTALLED PER STANDARD DETAIL C-303 SHALL BE LOCATED IN ACCORDANCE WITH THIS DETAIL.
7. **MINIMUM DIMENSION MUST BE SIDEWALK WIDTH PLUS ONE (1) FOOT OR SIX (6) FEET FROM FACE OF CURB, WHICHEVER IS GREATER.
8. IN INDUSTRIAL/COMMERCIAL ZONES A MINIMUM OF 6' FROM DRIVEWAYS SHALL BE MAINTAINED WITH VALVE INSTALLED AWAY FROM DRIVEWAY.
9. 3 FOOT UNOBSTRUCTED CLEARANCE AROUND FIRE HYDRANT AND HYDRANT VALVE. NO TREES, BUSHES, FENCES, WALLS, OR RIVER ROCK. NO CACTUS WITHIN 10 FEET OF A HYDRANT OR HYDRANT VALVE.

DETAIL NO. C-305 NTS	CITY OF CHANDLER STANDARD DETAIL	**LOCATIONS FOR NEW FIRE HYDRANT**	APPROVED: _____ CITY ENGINEER DATE: 02/09/12	DETAIL NO. C-305 NTS

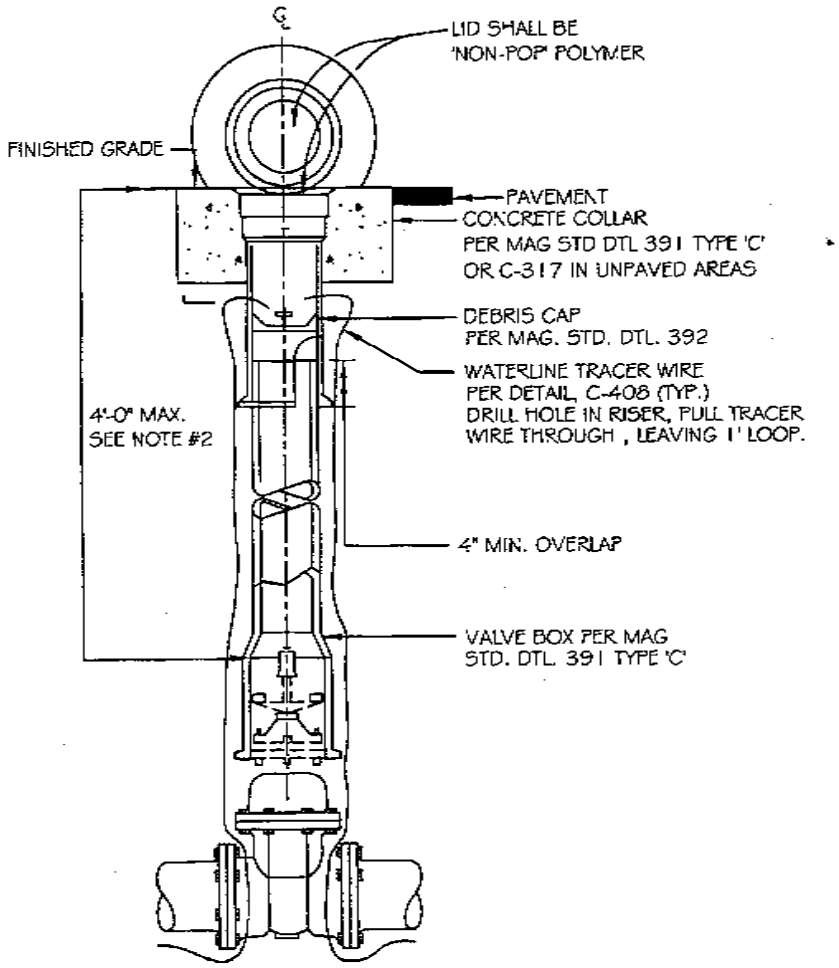

NOTES:

1. IN UNPAVED AREAS, CONCRETE COLLAR SHALL CONFORM TO DETAIL C-317.
2. AN EXTENSION SHAFT PER MAG. STD. DTL. 391 SHALL BE PROVIDED WHERE THE VALVE OPERATING NUT IS MORE THAN 4'-0" BELOW FINISH GRADE.
3. THE EXTENSION 2" OPERATOR SHALL BE FIRMLY TIGHTENED TO THE VALVE NUT.
4. BACKFILL SHALL BE 1/2 SACK CLSM. PER MAG. SPECIFICATION 718.
5. VALVE BOXES SHALL NOT BE INSTALLED WITHIN CONCRETE GUTTER, SIDEWALK, RAMPS OR VALLEY GUTTER.

DETAIL NO. C-307 NTS	CITY OF CHANDLER STANDARD DETAIL	**VALVE BOX INSTALLATION (POTABLE WATER)**	APPROVED: _____ CITY ENGINEER DATE: 01/06/09	DETAIL NO. C-307 NTS

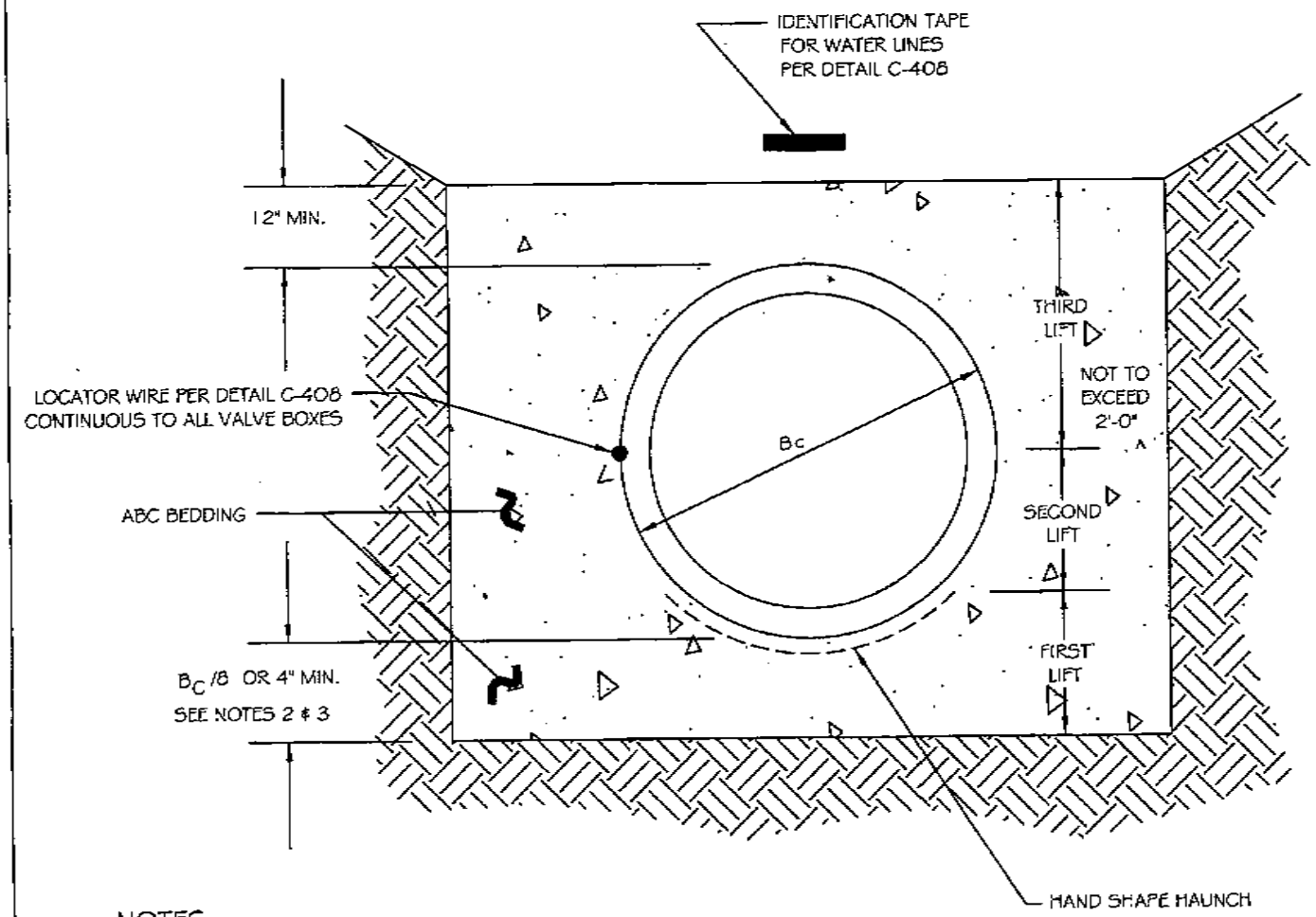

NOTES:

1. TRENCH WIDTH IN ACCORDANCE WITH MAG STD. TABLE 601-1.
2. MINIMUM 4" FOR PIPES 12" OR SMALLER.
3. MINIMUM 6" FOR PIPES LARGER THAN 12".

DETAIL NO. C-308 NTS	CITY OF CHANDLER STANDARD DETAIL	**WATER PIPE BEDDING DETAIL**	APPROVED: CITY ENGINEER DATE: 01/08/09	DETAIL NO. C-308 NTS

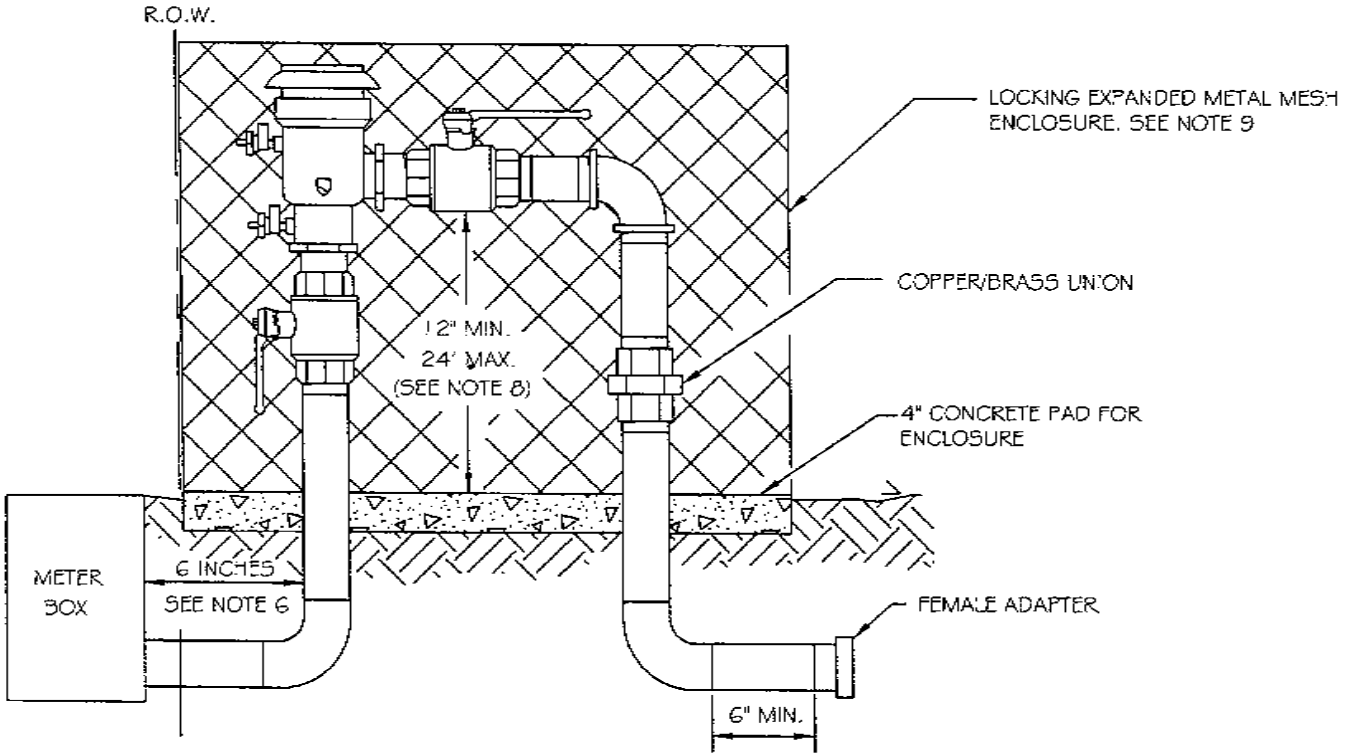

NOTES:

1. ASSEMBLY SHALL BE APPROVED BY UNIVERSITY OF SOUTHERN CALIFORNIA (USC) FOUNDATION FOR CROSS-CONNECTION CONTROL AND HYDRAULIC RESEARCH. LIST OF APPROVED ASSEMBLIES ON FILE AT CIVIL ENGINEERING.
2. SHUTOFF VALVES SHALL BE RESILIENT BALL TYPE WITH REMOVABLE HANDLES.
3. ALL PIPE AND FITTINGS SHALL BE TYPE 'K' RIGID COPPER. COMPRESSION FITTINGS ARE NOT ALLOWED.
4. TEST COCKS SHALL BE FITTED WITH BRASS PLUGS INSTALLED WITH TEFLON TAPE.
5. NO TAPS SHALL BE ALLOWED BETWEEN THE METER AND THE BACKFLOW PREVENTION ASSEMBLY.
6. INSTALL BACKFLOW PREVENTION ASSEMBLY INLINE AND WITHIN 6 INCHES OF THE METER BOX, IMMEDIATELY DOWNSTREAM OF THE LINESETTER.
7. THE COPPER/BRASS UNION MAY NOT BE REQUIRED IF THE ASSEMBLY INCORPORATES THE UNION.
8. ASSEMBLY MUST BE INSTALLED 12 INCHES ABOVE THE HIGHEST OUTLET OF THE SYSTEM. IF THIS DISTANCE EXCEEDS 24 INCHES, A REDUCED PRESSURE BACKFLOW PREVENTION ASSEMBLY PER DETAIL C-311 MUST BE INSTALLED.
9. LOCKING ENCLOSURE SHALL BE GUARD SHACK OR EQUIVALENT, PAINTED 'DESERT TAN' WITH TNEMEC EDUROSHIELD PER MFG'S INSTRUCTIONS. MINIMUM 12 MILS DFT.

DETAIL NO. C-309 NTS	CITY OF CHANDLER STANDARD DETAIL	**PRESSURE VACUUM BREAKER BACKFLOW PREVENTION ASSEMBLY INSTALLATION - 2" AND UNDER**	APPROVED: CITY ENGINEER DATE: 01-27-11	DETAIL NO. C-309 NTS

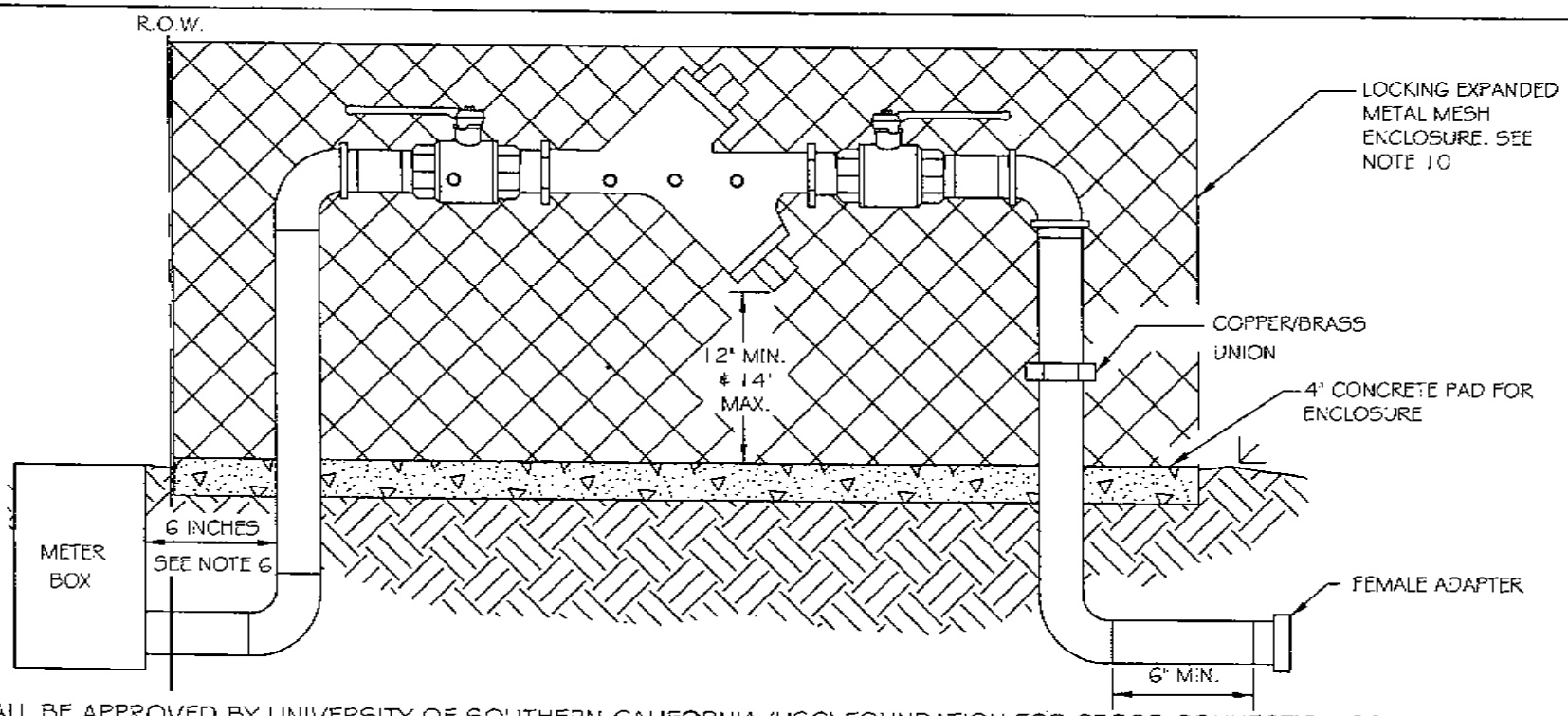

NOTES:

1. ASSEMBLY SHALL BE APPROVED BY UNIVERSITY OF SOUTHERN CALIFORNIA (USC) FOUNDATION FOR CROSS-CONNECTION CONTROL AND HYDRAULIC RESEARCH. LIST OF APPROVED ASSEMBLIES ON FILE AT CIVIL ENGINEERING.
2. SHUTOFF VALVES SHALL BE RESILIENT BALL TYPE WITH REMOVABLE HANDLES.
3. ALL PIPE AND FITTINGS SHALL BE TYPE 'K' RIGID COPPER. COMPRESSION FITTINGS ARE NOT ALLOWED.
4. TEST COCKS SHALL BE FITTED WITH BRASS PLUGS INSTALLED WITH TEFLON TAPE.
5. NO TAPS SHALL BE ALLOWED BETWEEN THE METER AND THE BACKFLOW PREVENTION ASSEMBLY.
6. INSTALL BACKFLOW PREVENTION ASSEMBLY INLINE AND WITHIN 6 INCHES OF THE METER BOX, IMMEDIATELY DOWNSTREAM OF THE LINESETTER.
7. THE COPPER/BRASS UNION MAY NOT BE REQUIRED IF THE ASSEMBLY INCORPORATES THE UNION.
8. BACKFLOW PREVENTION ASSEMBLY MUST BE LEVEL AND INSTALLED A MINIMUM OF 12 INCHES AND A MAXIMUM OF 14 INCHES FROM ASSEMBLY BODY TO FINAL GRADE.
9. ALL PIPE, RECLAIMED AND POTABLE, SHALL BE INSTALLED WITH COPPER TRACING WIRE AND ATTACHED TO EACH VALVE.
10. LOCKING ENCLOSURE SHALL BE GUARD SHACK OR EQUIVALENT, PAINTED 'DESERT TAN' WITH TNEMEC EDUROSHIELD PER MFG'S INSTRUCTIONS. MINIMUM 12 MILS DFT.

DETAIL NO. C-310 NTS	CITY OF CHANDLER STANDARD DETAIL	**DOUBLE-CHECK VALVE BACKFLOW PREVENTION INSTALLATION - 3" AND UNDER**	APPROVED: _____ CITY ENGINEER DATE: 01-27-11	DETAIL NO. C-310 NTS

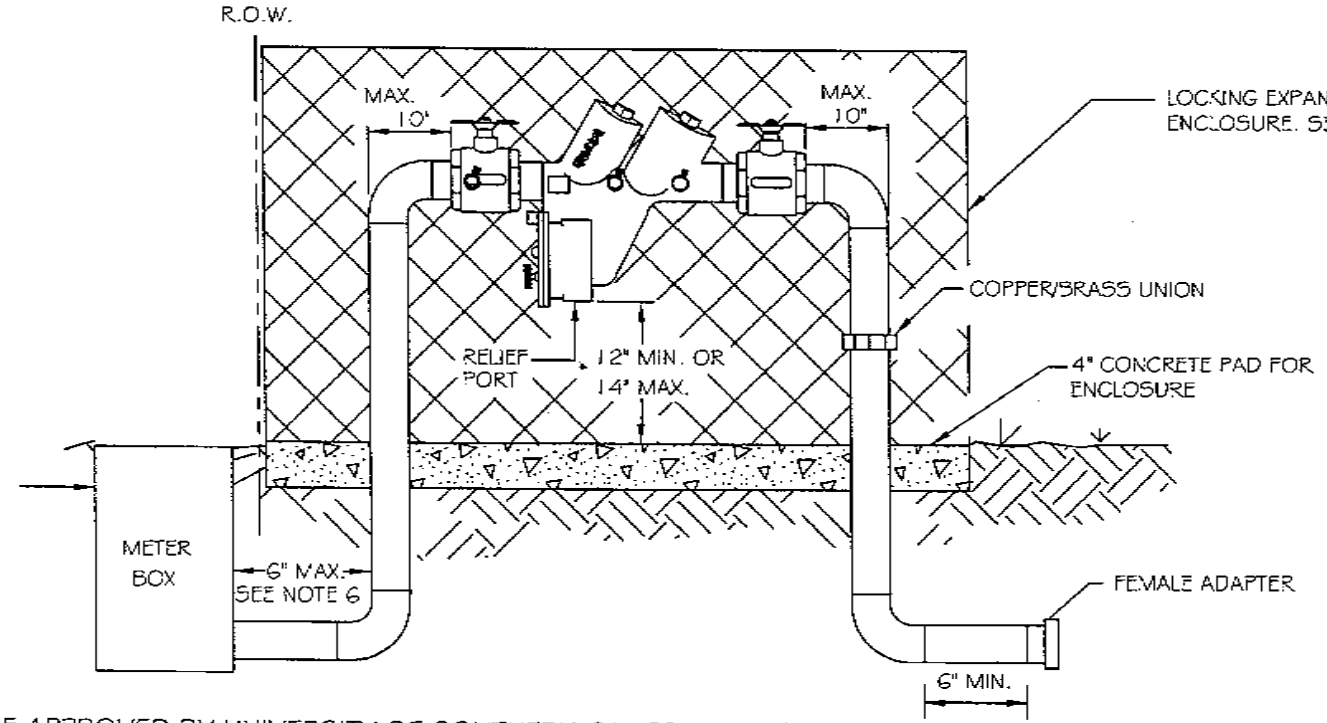

NOTES:

1. ASSEMBLY SHALL BE APPROVED BY UNIVERSITY OF SOUTHERN CALIFORNIA (USC) FOUNDATION FOR CROSS-CONNECTION CONTROL AND HYDRAULIC RESEARCH. LIST OF APPROVED ASSEMBLIES ON FILE AT CIVIL ENGINEERING.
2. SHUTOFF VALVES SHALL BE RESILIENT BALL TYPE WITH REMOVABLE HANDLES.
3. ALL PIPE AND FITTINGS SHALL BE TYPE 'K' RIGID COPPER. COMPRESSION FITTINGS ARE NOT ALLOWED.
4. TEST COCKS SHALL BE FITTED WITH BRASS PLUGS INSTALLED WITH TEFLON TAPE.
5. NO TAPS SHALL BE ALLOWED BETWEEN THE METER AND THE BACKFLOW PREVENTION ASSEMBLY.
6. INSTALL BACKFLOW PREVENTION ASSEMBLY INLINE AND WITHIN 6 INCHES OF THE METER BOX, IMMEDIATELY DOWNSTREAM OF THE LINESETTER.
7. THE COPPER/BRASS UNION MAY NOT BE REQUIRED IF THE ASSEMBLY INCORPORATES THE UNION.
8. INSTALL BACKFLOW PREVENTION ASSEMBLY WITH RELIEF PORT FACING TOWARD THE GROUND.
9. BACKFLOW PREVENTION INSTALLATION MUST BE LEVEL, AND INSTALLED A MINIMUM OF 12 INCHES AND A MAXIMUM OF 14 INCHES FROM RELIEF PORT TO FINAL GRADE.
10. LOCKING ENCLOSURE SHALL BE GUARD SHACK OR EQUIVALENT, PAINTED 'DESERT TAN' WITH TNEMEC EDUROSHIELD PER MFG'S INSTRUCTIONS. MINIMUM 12 MILS DFT.

DETAIL NO. C-311 NTS	CITY OF CHANDLER STANDARD DETAIL	**REDUCED PRESSURE-PRINCIPLE BACKFLOW PREVENTION ASSEMBLY INSTALLATION - 3" AND UNDER**	APPROVED: CITY ENGINEER DATE: 01-27-11	DETAIL NO. C-311 NTS

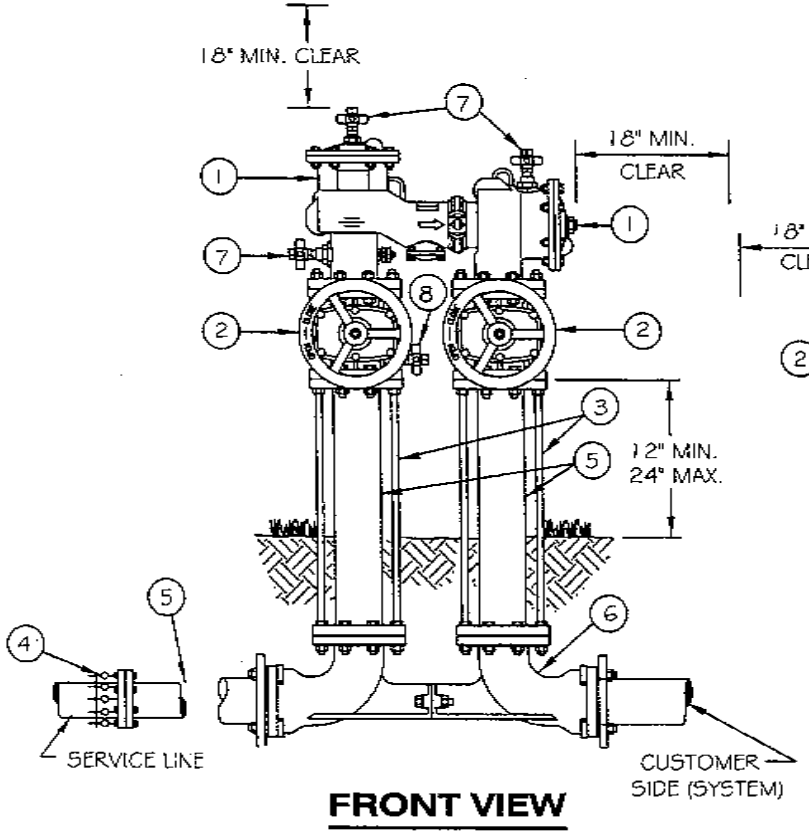

FRONT VIEW

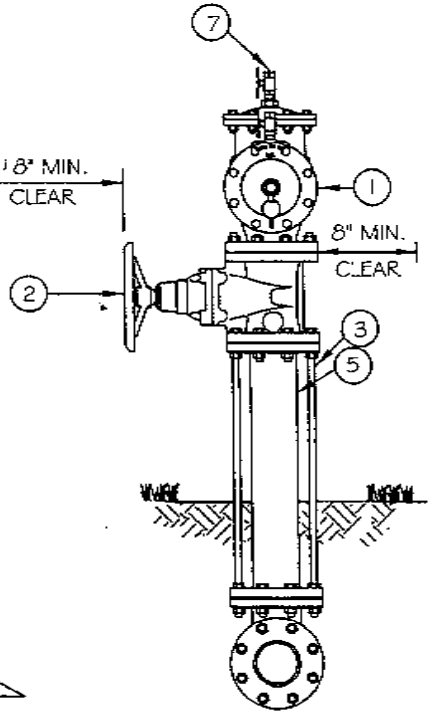

SIDE VIEW

LIST OF MATERIALS

1. APPROVED DOUBLE CHECK VALVE BACKFLOW PREVENTION ASSEMBLY. (DOUBLE CHECK DETECTOR ASSEMBLY INSTALLATION SIMILAR).
2. N.R.S. GATE VALVE.
3. 3/4" ZINC COATED THREADED ROD BOLTED TO FLANGES, BOTH SIDES TYPICAL EQUAL TENSION MINIMUM FOUR RODS, EVENLY SPACED.
4. FLANGED ADAPTER, (WHEN REQUIRED).
5. PIPE SPOOL. (FLANGED DIP)
6. VALVE SETTER.
7. TEST COCKS, (3 REQUIRED) WITH BRASS PLUGS USING ONLY TEFLON TAPE.
8. TEST COCK WITH A STEEL 90° ELL WITH BRASS PLUG USING ONLY TEFLON TAPE.

NOTES:

1. LIST OF LATEST APPROVED ASSEMBLIES ON FILE AT ENGINEERING. COPIES AVAILABLE.
2. ASSEMBLY SHALL BE AS APPROVED BY UNIVERSITY OF SOUTHERN CALIFORNIA (USC) FOUNDATION FOR CROSS-CONNECTION CONTROL AND HYDRAULIC RESEARCH.
3. ABOVE GROUND PORTION OF ASSEMBLY TO BE PAINTED LIGHT TAN OR EQUIVALENT BACKGROUND COLOR.
4. WHEN UTILIZED FOR RECLAIMED WATER, THE WORDS 'RECLAIMED WATER' SHALL BE STENCILED ON THE ASSEMBLY USING THE COLOR 'SAFETY PURPLE'.

SCREENING METHOD

1. SCREEN WALLS, PLANT MATERIAL BERMING AND/OR BUILDING ORIENTATION SHALL BE SUBMITTED TO DEVELOPMENT SERVICES FOR REVIEW AND APPROVAL PRIOR TO START OF CONSTRUCTION.
2. METHOD OF SCREENING USED MAY REQUIRE FDCS TO BE REMOTELY LOCATED. FDC LOCATION AND METHOD OF INSTALLATION SHALL BE INCLUDED ON SCREENING PLAN SUBMITTED TO DEVELOPMENT SERVICES FOR REVIEW AND APPROVAL.

DETAIL NO. C-312 NTS	CITY OF CHANDLER STANDARD DETAIL	**DOUBLE CHECK VALVE BACKFLOW PREVENTION ASSEMBLY 2 1/2", 4", 6", 8" 10" PRIVATE DOMESTIC WATER MAIN**	APPROVED: _____ CITY ENGINEER DATE: 01-27-11	DETAIL NO. C-312 NTS

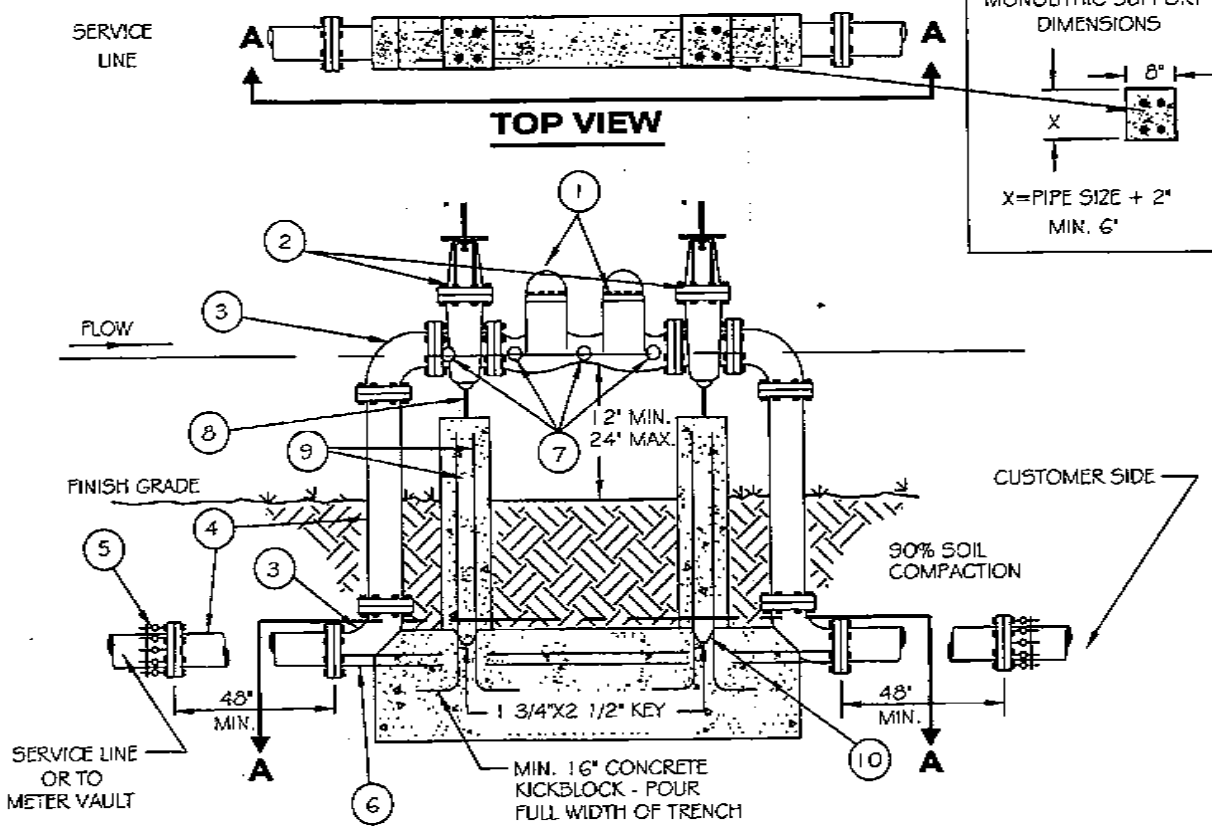

LIST OF MATERIALS

1. APPROVED DOUBLE CHECK VALVE BACKFLOW PREVENTION ASSEMBLY. (DOUBLE CHECK DETECTOR ASSEMBLY INSTALLATION SIMILAR).
2. O.S.&Y. GATE VALVE, N.R.S. GATE VALVE, IF PREFERRED.
3. 90° ELL. (FLANGED D.I.P.)
4. PIPE SPOOL (FLANGED D.I.P.)
5. FLANGED ADAPTER (WHEN REQUIRED).
6. 3/4" ZINC COATED THREADED ROD, BOLTED TO FLANGES AS SHOWN, BOTH SIDES TYPICAL EQUAL TENSION.
7. TEST COCKS (4 REQUIRED WITH BRASS PLUGS USING ONLY TEFLON TAPE.)
8. ADJUSTABLE PIPE SUPPORT MUST BE PERMANENTLY ATTACHED TO BASE, 6" MAXIMUM HEIGHT.
9. #6 REINFORCING STEEL, DEFORMED BAR, 4" APART, EVENLY SPACED.
10. CONSTRUCTION JOINT KEY TO BE 1 3/4" X 2 1/2".

NOTES:

1. LIST OF LATEST APPROVED ASSEMBLIES ON FILE AT ENGINEERING. COPIES AVAILABLE.
2. ASSEMBLY SHALL BE AS APPROVED BY UNIVERSITY OF SOUTHERN CALIFORNIA (USC) FOUNDATION FOR CROSS-CONNECTION CONTROL AND HYDRAULIC RESEARCH.
3. ABOVE GROUND PORTION OF ASSEMBLY TO BE PAINTED LIGHT TAN OR EQUIVALENT BACKGROUND COLOR.
4. WHEN UTILIZED FOR RECLAIMED WATER, THE WORDS 'RECLAIMED WATER' SHALL BE STENCILED ON THE ASSEMBLY USING THE COLOR 'SAFETY PURPLE'.

SCREENING METHOD

1. SCREEN WALLS, PLANT MATERIAL, BERMING AND/OR BUILDING ORIENTATION SHALL BE SUBMITTED TO DEVELOPMENT SERVICES FOR REVIEW AND APPROVAL PRIOR TO START OF CONSTRUCTION.

DETAIL NO. C-314 NTS	CITY OF CHANDLER STANDARD DETAIL	**DOUBLE CHECK VALVE BACKFLOW PREVENTION ASSEMBLY 3", 4", 6", 8", 10"**	APPROVED: _____ CITY ENGINEER DATE: 01/06/09	DETAIL NO. C-314 NTS

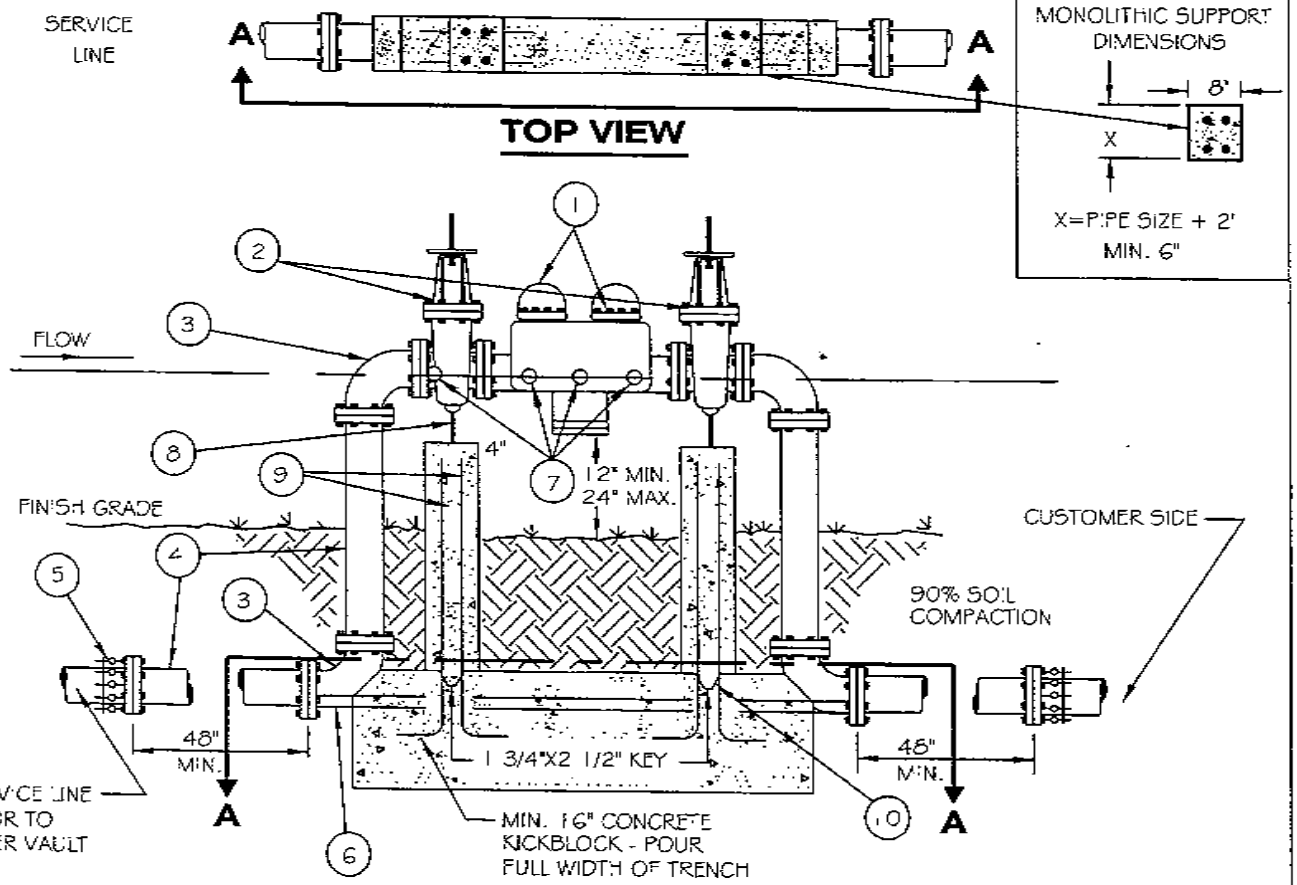

SIDE VIEW

NOTES:

1. LIST OF LATEST APPROVED ASSEMBLIES ON FILE AT ENGINEERING. COPIES AVAILABLE.
2. ASSEMBLY SHALL BE AS APPROVED BY UNIVERSITY OF SOUTHERN CALIFORNIA (USC) FOUNDATION FOR CROSS-CONNECTION CONTROL AND HYDRAULIC RESEARCH.
3. ABOVE GROUND PORTION OF ASSEMBLY TO BE PAINTED LIGHT TAN OR EQUIVALENT BACKGROUND COLOR.
4. WHEN UTILIZED FOR RECLAIMED WATER, THE WORDS 'RECLAIMED WATER' SHALL BE STENCILED ON THE ASSEMBLY USING THE COLOR 'SAFETY PURPLE'.

LIST OF MATERIALS

1. APPROVED REDUCED PRESSURE PRINCIPLE BACKFLOW PREVENTION ASSEMBLY.
2. O.S.&Y. GATE VALVE, N.R.S. GATE VALVE, IF PREFERRED.
3. 90° ELL. (FLANGED D.I.P.)
4. PIPE SPOOL (FLANGED D.I.P.)
5. FLANGED ADAPTER (WHEN REQUIRED)
6. 3/4" ZINC COATED THREADED ROD, BOLTED TO FLANGES AS SHOWN, BOTH SIDES TYPICAL EQUAL TENSION.
7. TEST COCKS (4 REQUIRED WITH BRASS PLUGS USING ONLY TEFLON TAPE.)
8. ADJUSTABLE PIPE SUPPORT MUST BE PERMANENTLY ATTACHED TO BASE, 6" MAXIMUM HEIGHT.
9. #6 REINFORCING STEEL, DEFORMED BAR, 4" APART, EVENLY SPACED.
10. CONSTRUCTION JOINT KEY TO BE 1 3/4" X 2 1/2".

SCREENING METHOD

1. SCREEN WALLS, PLANT MATERIAL, BERMING AND/OR BUILDING ORIENTATION SHALL BE SUBMITTED TO DEVELOPMENT SERVICES FOR REVIEW AND APPROVAL PRIOR TO START OF CONSTRUCTION.

DETAIL NO.				
C-315 NTS	CITY OF CHANDLER STANDARD DETAIL	**REDUCED PRESSURE PRINCIPLE ASSEMBLY 3", 4", 6", 8", 10"**	APPROVED: [signature] CITY ENGINEER DATE: 01-27-11	DETAIL NO. **C-315** NTS

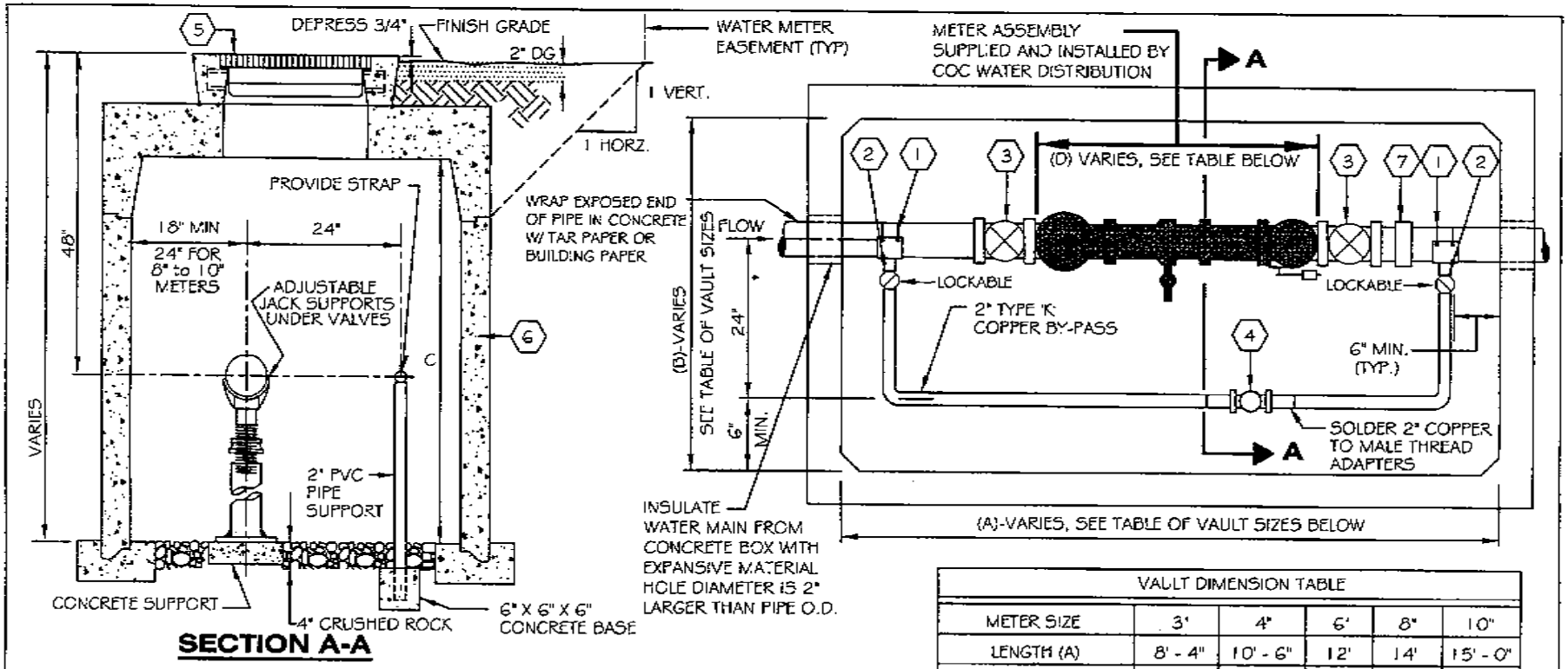

SECTION A-A

VAULT DIMENSION TABLE					
METER SIZE	3"	4"	6"	8"	10"
LENGTH (A)	8' - 4"	10' - 6"	12'	14'	15' - 0"
WIDTH (B)	4' - 4"	5'	5'	5' - 6"	5' - 6"
INSIDE HEIGHT (C)	4' - 6"	5' - 0"	5' - 6"	6' - 0"	6' - 6"
METER ASSEMBLY (D) BLOCK OUT COMPOUND METER	3' - 8"	4' - 5"	6' - 8"	8' - 1"	10' - 0"
TURBINE METER	3' - 3"	3' - 11"	6' - 7"	7' - 11"	9' - 0"

NOTES:

1. METER VAULTS MAY BE EITHER CAST-IN-PLACE OR PRE-CAST CONCRETE. SEE MAG STANDARD DETAIL 321 FOR VAULT CONSTRUCTION, 3" TO 6" METERS.
2. FOR LARGER THAN 6" METERS SPECIAL VAULT DESIGN IS REQUIRED. SUBMIT FOR APPROVAL.
3. STAINLESS BOLTS AND NUTS REQUIRED FOR ENTIRE ASSEMBLY.
4. PIPE MAIN SHALL BE FULLY RESTRAINED BEYOND INLET AND OUTLET OF VAULT.
5. CONTRACTOR SHALL PROVIDE FLANGED SPOOL IN METER ASSEMBLY BLOCK-OUT TO PROVE CORRECT ALIGNMENT. SPOOL MAY BE SALVAGED AFTER METER INSTALLATION.
6. VAULT LID SHALL NOT BE INSTALLED UNTIL AFTER METER IS INSTALLED BY CITY. CALL (480) 782-3700.

⬡ LEGEND:

1. DOUBLE STRAP ALL BRONZE SERVICE SADDLES.
2. 2" CORP STOP WITH BRONZE OR BRASS BODY, LOCKABLE, TO NORMALLY BE CLOSED.
3. O.S. & Y. GATE VALVE, FLANGED WITH HAND WHEEL OPEN LEFT, AND RISING STEM.
4. 2" BRONZE CHECK VALVE. (LOW ZINC)
5. METER HATCH PER SYRACUSE CASTINGS "CH-AL" STYLE PEDESTRIAN RATED ALUMINUM WITH SLAM LOCK OR APPROVED EQUAL. 3" & 4" - CH-5AL 42" X 42", 6" THROUGH 10" - CHD-9AL 36" X 60". UPON APPROVAL FROM CITY, DRILL 1-¾" HOLE(S) IN HATCH FOR METER TRANSMITTER(S).
6. METER VAULT PER UTILITY VAULT COC STANDARD DETAIL OR APPROVED EQUAL.
7. PROVIDE 1" TO 1-1/2" OF PLAY IN THE FLEX COUPLING - CAULDER OR EQUAL.

DETAIL NO. C-316 NTS	CITY OF CHANDLER STANDARD DETAIL	3" TO 10" METER VAULT	APPROVED: CITY ENGINEER DATE: June 12 06	DETAIL NO. C-316 NTS

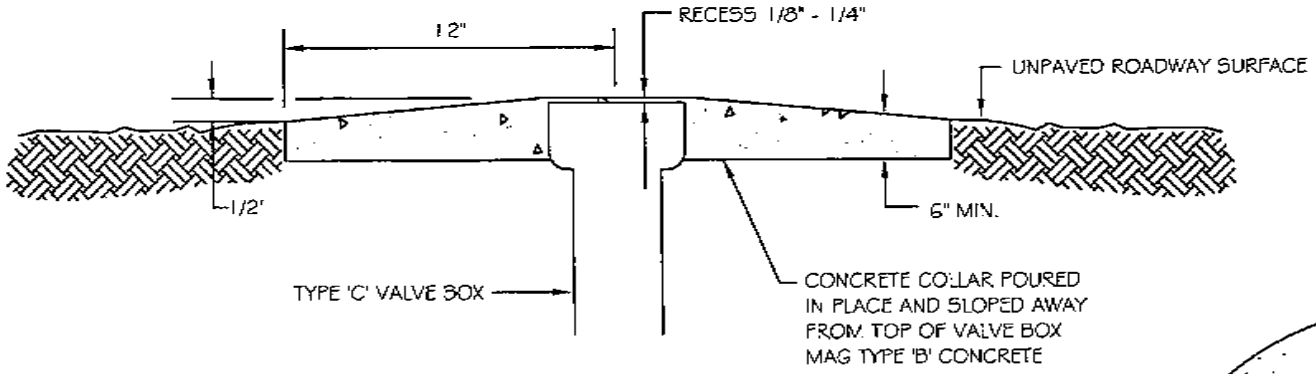

SIDE VIEW

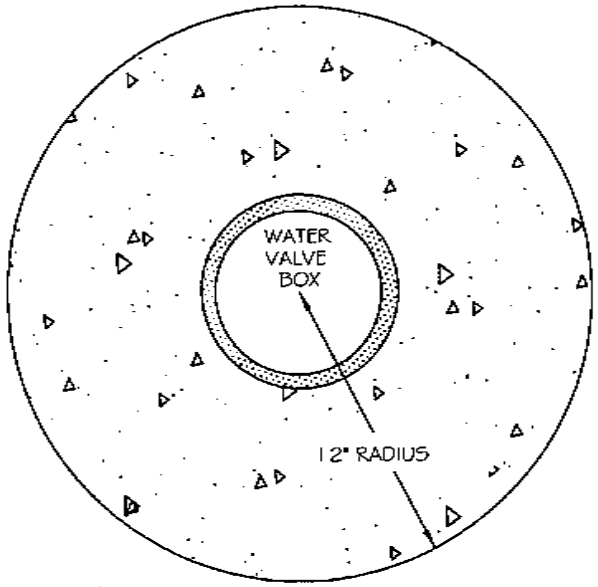

TOP VIEW

C-317 **REPLACES** **52**	CITY OF CHANDLER STANDARD DETAIL	**CONCRETE COLLAR DETAIL** **WATER VALVE BOX PLACEMENT** **UNPAVED AREAS**	APPROVED: CITY ENGINEER DATE: January 11, 2002	DETAIL NO. **C-317** NTS

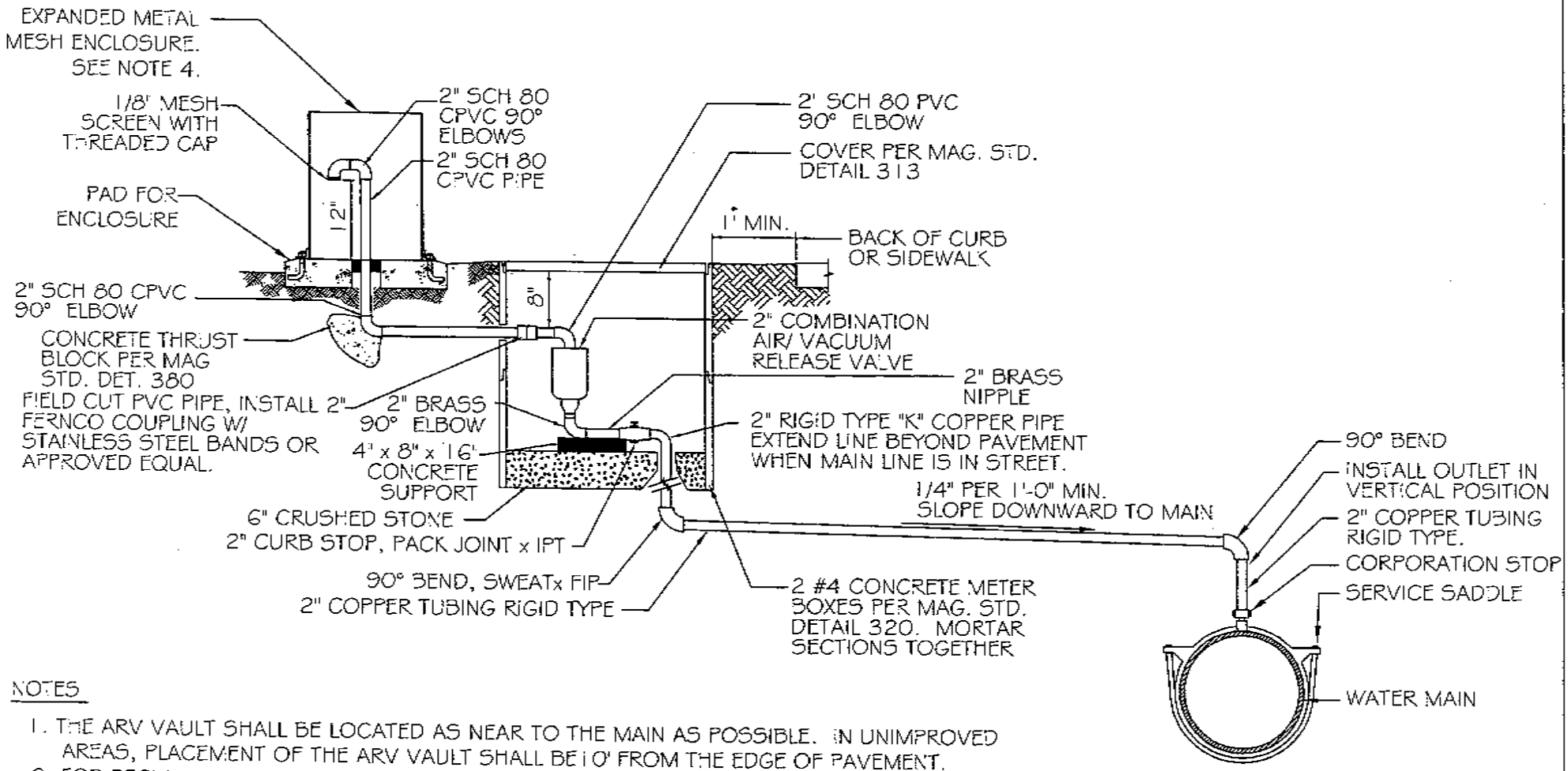

NOTES

1. THE ARV VAULT SHALL BE LOCATED AS NEAR TO THE MAIN AS POSSIBLE. IN UNIMPROVED AREAS, PLACEMENT OF THE ARV VAULT SHALL BE 10' FROM THE EDGE OF PAVEMENT.
2. FOR RECLAIMED WATER APPLICATIONS, THE PIPE SHALL BE PAINTED PURPLE (PANTONE 512). POTABLE WATER SHALL BE PAINTED BLUE.
3. AIR RELEASE/VACUUM VALVE SHALL BE APCO-145C OR A.R.I. D-040.
4. ENCLOSURE SHALL BE GUARD SHACK OR EQUIVALENT, PAINTED 'DESERT TAN' WITH TNEMEC EDUROSHIELD PER MFG'S INSTRUCTIONS. MINIMUM 12 MILS DFT.

DETAIL NO. C-319 NTS	CITY OF CHANDLER STANDARD DETAIL	**2" COMBINATION AIR/VACUUM VALVE ASSEMBLY**	APPROVED: Brian Hall CITY ENGINEER DATE: 01-27-11	DETAIL NO. C-319 NTS

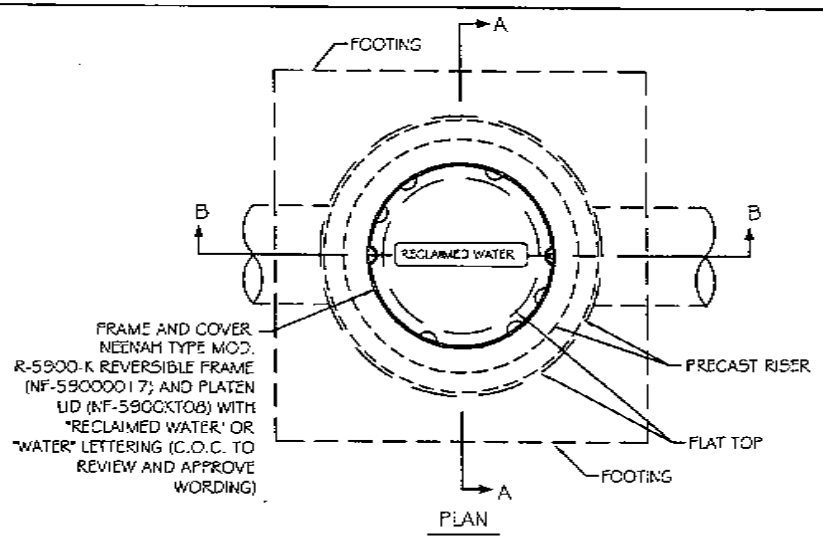

PLAN

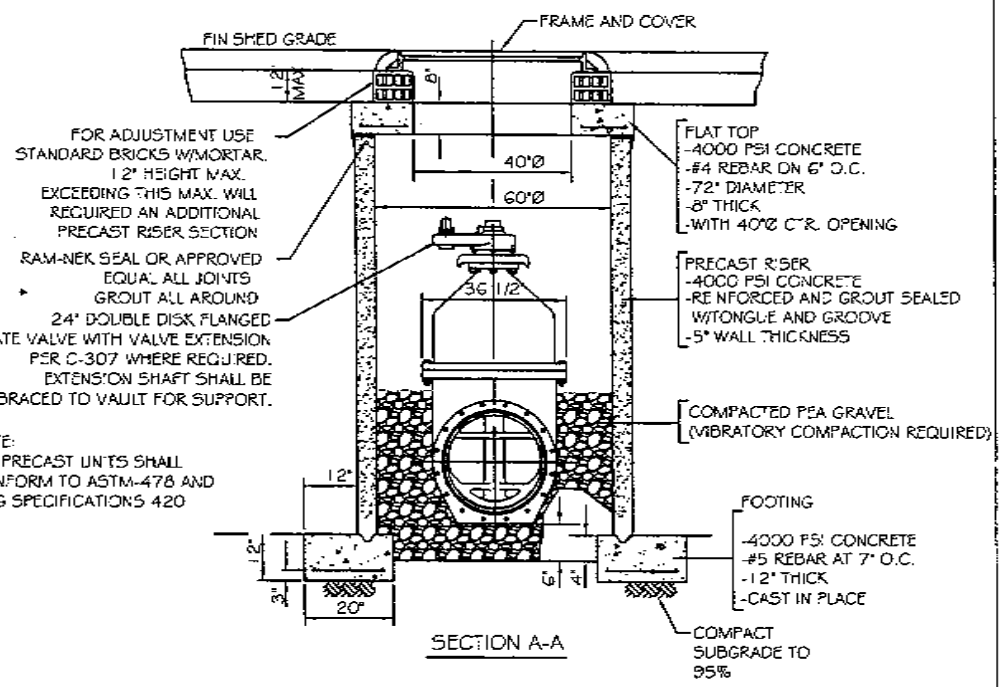

NOTE:
ALL PRECAST UNITS SHALL CONFORM TO ASTM-478 AND MAG SPECIFICATIONS 420

SECTION A-A

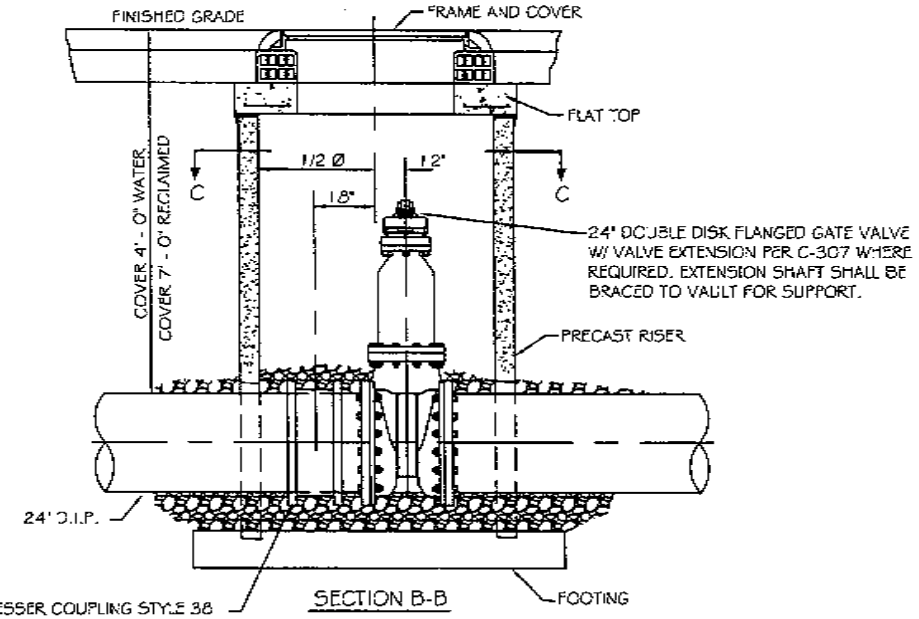

SECTION B-B

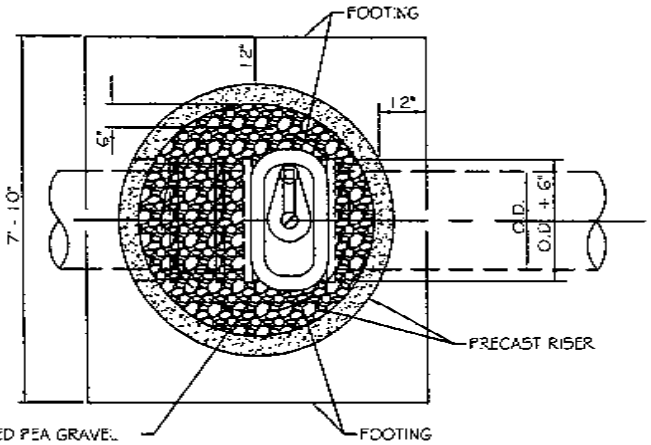

SECTION C-C

DETAIL NO. C-320 NTS	CITY OF CHANDLER STANDARD DETAIL	VAULT FOR 24" GATE VALVE	APPROVED: CITY ENGINEER DATE: 01/14/10	DETAIL NO. C-320 NTS

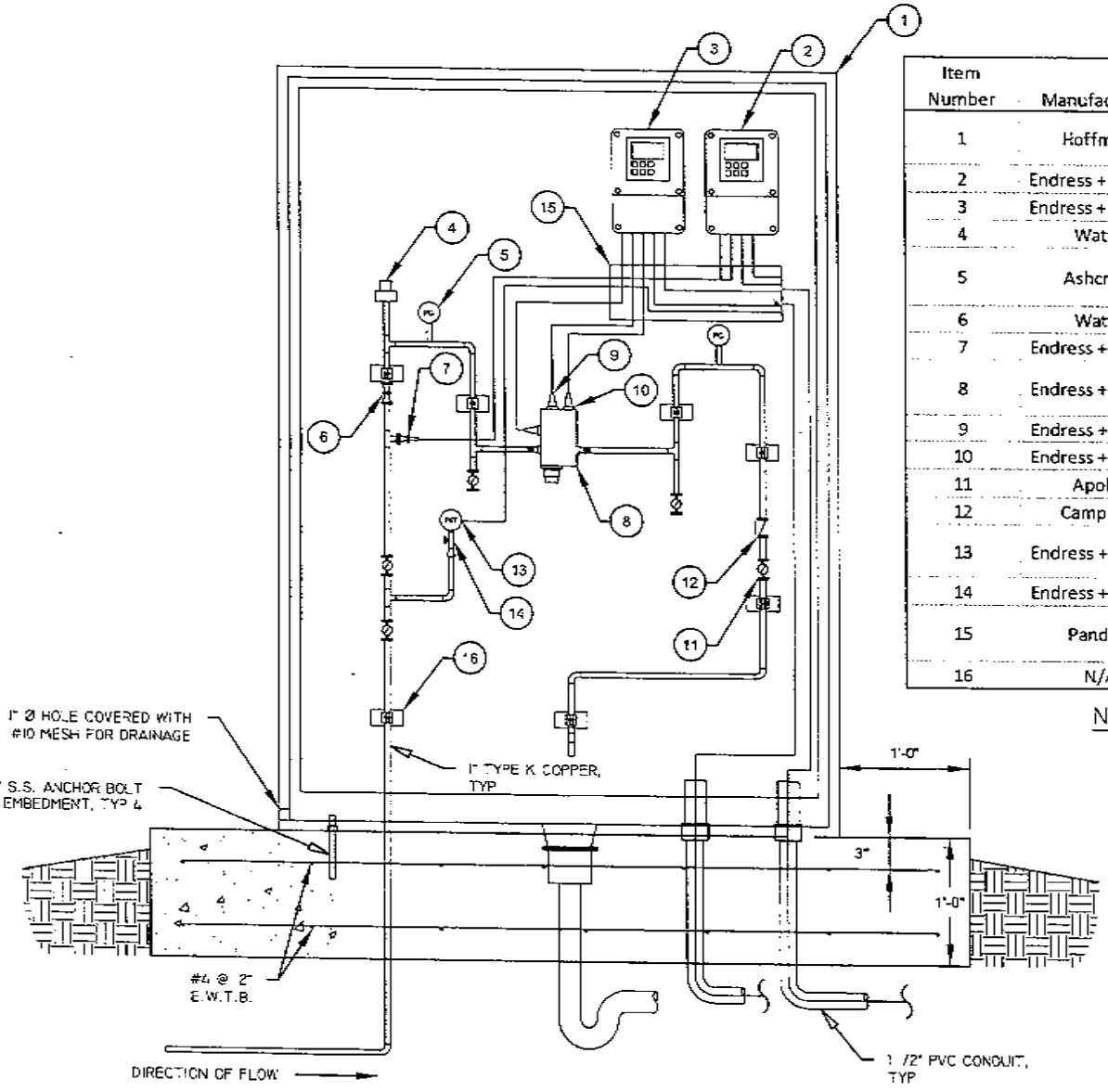

NOT TO SCALE

Item Number	Manufacturer	Model Number	Description
1	Hoffman	A724818SSFSDN4	60"H x 36"W x 24"D NEMA 4X Enclosure, Stainless Steel w/ 3pt latch
2	Endress + Hauser	CCM253	pH and Chlorine Analyzer
3	Endress + Hauser	CLM253	Conductivity and Temperature Analyzer
4	Watts	FV-4M1	1" Automatic Air Vent Valve
5	Ashcroft	25-1009SW02L 100#	Pressure Gage, Stainless Steel, 2 1/2" dial, 100 psi
6	Watts	123LP	1" Pressure Reducing Valve
7	Endress + Hauser	CLS21-C3B2A	Conductivity and Temperature Sensor
8	Endress + Hauser	CCA250-A1	Flow Assembly for Chlorine and pH/ORP Sensors
9	Endress + Hauser	CPS11-2BA2ESA	pH Sensor
10	Endress + Hauser	CCS140-N	Chlorine Sensor
11	Apollo	7010501	1" Bronze Ball Valve, Standard Port
12	Campbell	CV-4T	1" Brass Check Valve
13	Endress + Hauser	PMC71-AAC1S6RDAAA1	Pressure Transmitter
14	Endress + Hauser	2VM-SS-8-RM	1/2" Stainless Steel Block and Bleed
15	Panduit	F2x2LG6C2LG6	2" x 2" Wireway, narrow slot, gray w/ cover
16	N/A	N/A	Non-metallic pipe clamp and offset

NOTES

1. INFLUENT SERVICE SHALL BE WATER TAP PER C-301.
2. EFFLUENT SHALL DISCHARGE VIA 4" AIR GAP TO 2" FLOOR DRAIN CONNECTED TO SEWER PER C-411.
3. FLOOR DRAIN SHALL BE INSTALLED WITH TRAP SEAL. BOTTOM OF CABINET SHALL BE CUT OUT TO EXPOSE.

DETAIL NO. **C-321** NTS

CITY OF CHANDLER STANDARD DETAIL

WATER QUALITY MONITORING STATION

APPROVED: _____ CITY ENGINEER

DATE: 01-27-11

DETAIL NO. **C-321** NTS

WASTEWATER SERIES

C-400 TO C-416

COVER - TOP VIEW
SANITARY SEWER

COVER - TOP VIEW
STORM SEWER

NOTE:

1. FRAME AND COVER SHALL CONFORM TO MAG. STD. DETAIL 423, 424, OR 425.
2. DELETE BEADS ON MAG. STD. DETAIL WHICH CONFLICT WITH LOGO SHOWN.
3. LETTERING ON MANHOLE COVER SHALL CONTAIN UTILITY FOR WHICH MANHOLE IS NEEDED, ("CHANDLER SANITARY SEWER" OR, "CHANDLER STORM SEWER"), OR AS DIRECTED.
4. THE TOTAL WIDTH OF INDIVIDUAL LETTERS SHALL BE SUCH THAT LETTERS AND WORDS ARE EQUALLY SPACED AND SHALL BE BALANCED TO FORM A COMPLETE CIRCLE WITH SPACES BEFORE AND AFTER THE WORD.
5. LETTERS SHALL BE 2" IN HEIGHT AND RAISED 1/8" ABOVE LEVEL OF COVER.
6. TYPE OF LETTERS SHALL BE SUBMITTED FOR APPROVAL.

DETAIL NO. **C-400**	CITY OF CHANDLER STANDARD DETAIL	**MANHOLE COVER**	APPROVED: _____ CITY ENGINEER DATE: 01/08/09	DETAIL NO. **C-400**

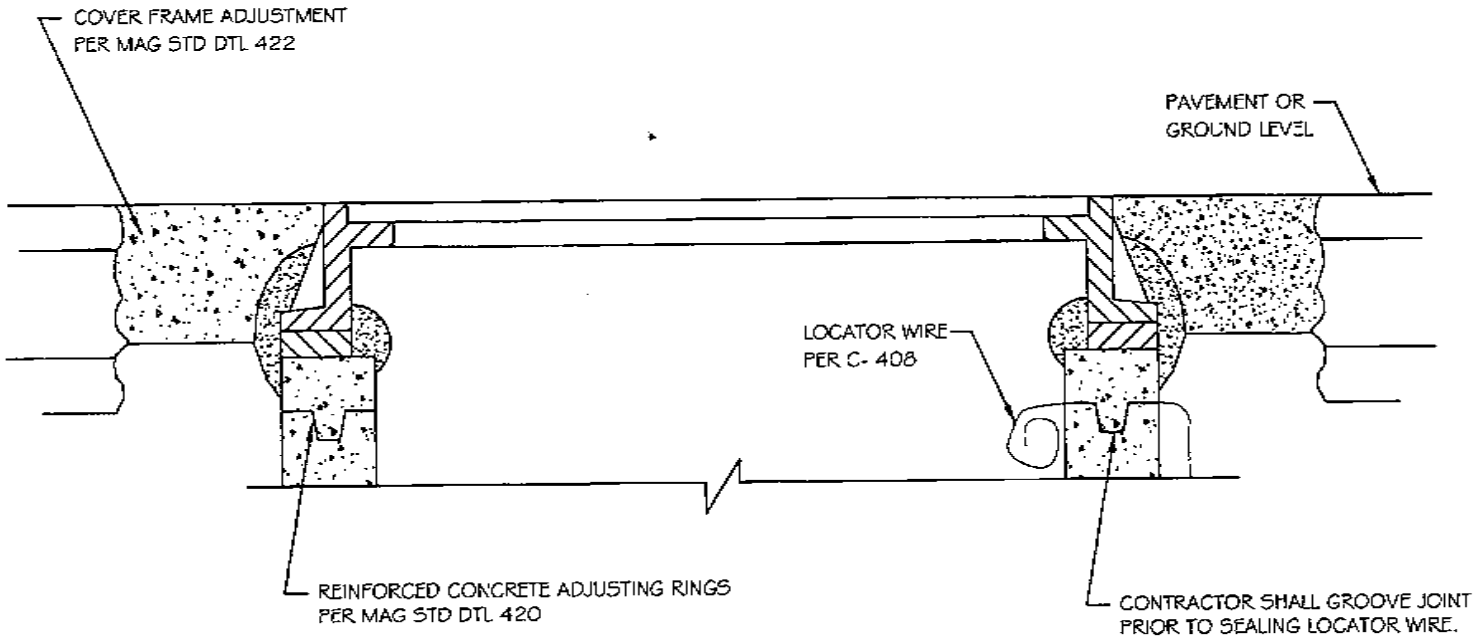

DETAIL NO. C-401 NTS	CITY OF CHANDLER STANDARD DETAIL	**MANHOLE CONCRETE COLLAR DETAIL**	APPROVED: CITY ENGINEER DATE: 01/08/09	DETAIL NO. C-401 NTS

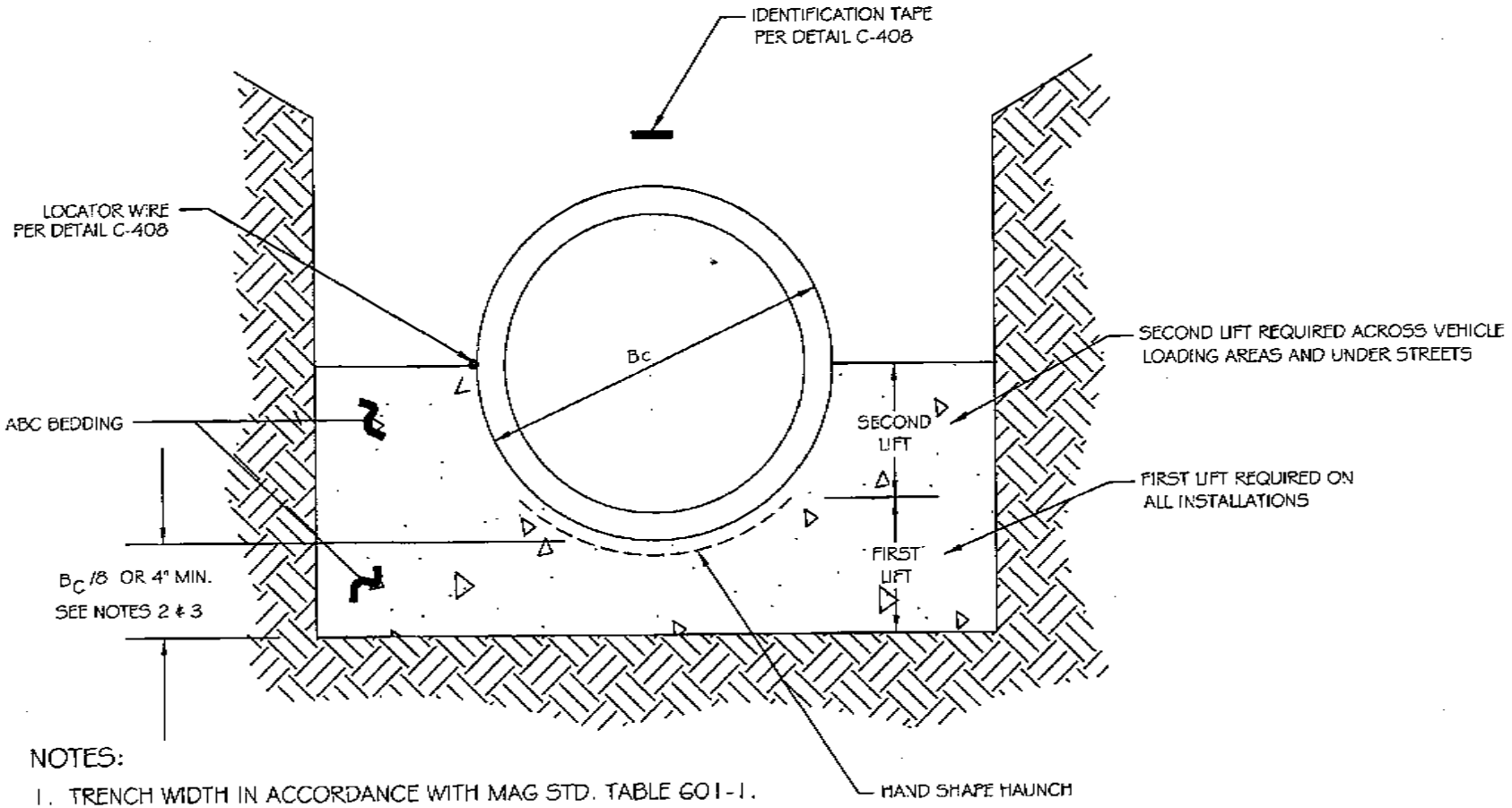

NOTES:

1. TRENCH WIDTH IN ACCORDANCE WITH MAG STD. TABLE 601-1.
2. MINIMUM 4" FOR PIPES 12" OR SMALLER.
3. MINIMUM 6" FOR PIPES LARGER THAN 12".
4. SEWER PIPE SHALL BE EXTRA-STRENGTH VITRIFIED CLAY PIPE PER MAG SPEC 743. PVC PER MAG SPEC 745 IS PERMITTED AT DEPTHS OF COVER LESS THAN 10'. SOILS INVESTIGATION, TRENCH DETAIL, STRUCTURAL ANALYSIS, AND CITY ENGINEER'S APPROVAL IS REQUIRED FOR PERMITTING PVC PIPE AT GREATER THAN 10' COVER.

DETAIL NO. C-402 NTS	CITY OF CHANDLER STANDARD DETAIL	**SEWER PIPE BEDDING DETAIL**	APPROVED: _____ CITY ENGINEER DATE: 01/08/09	DETAIL NO. C-402 NTS

RECLAIMED WATER SERVICE CONNECTIONS SIZING TABLE

SERVICE CONNECTION FLOW RATE (GPM)	IRRIGATION SERVICE LINE SIZE (AFTER PUMP)	RECLAIMED WATER SERVICE CONNECTION LINE SIZE (FROM MAIN TO PUMP)	WET WELL PUMP SEE PAGES:	CAN PUMP SEE PAGES:
UP TO 80	2"	3" *	PAGE 3	-
80 TO 170	3"	4"	PAGE 4	-
170 TO 300	4"	6"	PAGES 5 & 6	PAGES 9 & 10
300 TO 700	6"	8"	PAGES 7 & 8	PAGES 11 & 12

NOTES:

1. THE DATA FORM ON DETAIL C-404 PAGE 2 MUST BE COMPLETED AND SUBMITTED WITH THE BUILDING PERMIT APPLICATION FOR THE IN-LINE PUMP AND CAN PUMP SERVICE CONNECTIONS.
2. THESE RECLAIMED WATER SERVICE CONNECTION DETAILS PRESENT THE MINIMUM REQUIREMENTS TO ENSURE THE INTEGRITY OF THE CITY OF CHANDLER'S RECLAIMED WATER DISTRIBUTION SYSTEM. ALL RECLAIMED WATER SERVICE CONNECTIONS MUST BE DESIGNED IN ACCORDANCE WITH THESE DETAILS AND THE SITE-SPECIFIC REQUIREMENTS INCLUDING: THE GROUND ELEVATION, IRRIGATION SYSTEM FLOW REQUIREMENTS, AND IRRIGATION SYSTEM PRESSURE REQUIREMENTS.
3. ALL RECLAIMED WATER SERVICE CONNECTIONS SHALL BE DESIGNED IN ACCORDANCE WITH MARICOPA COUNTY ENVIRONMENTAL SERVICES DEPARTMENT (MCESD) AND ARIZONA DEPARTMENT OF ENVIRONMENTAL QUALITY (ADEQ) REQUIREMENTS.
4. AN APPROVAL TO CONSTRUCT PERMIT FROM MCESD IS REQUIRED FOR ALL RECLAIMED WATER SERVICE CONNECTIONS PRIOR TO CONSTRUCTION. A COPY OF THE APPROVAL OF CONSTRUCTION FROM MCDES MUST BE SUBMITTED TO THE CITY OF CHANDLER PRIOR TO PLACING THE RECLAIMED WATER SERVICE CONNECTION IN SERVICE.
5. ALL ABOVE GROUND PIPING SHALL BE PAINTED PURPLE OR STENCILED IN ACCORDANCE WITH MARICOPA ASSOCIATION OF GOVERNMENTS (MAG) STANDARDS SECTION 616.4.2.

DEVELOPER: _____

TURNOUT ADDRESS: _____

FLOW RATE CRITERIA

ANNUAL AVERAGE _____ ACRE FT/YEAR

MAXIMUM MONTH _____ ACRE FT

INSTANTANEOUS _____ GPM

SUCTION HEAD CALCULATION

(1) LENGTH AND DIAMETER OF PIPING FROM NEAREST RECLAIMED WATER TRANSMISSION MAIN (RWTM) TO TURNOUT _____

(2) FRICTION LOSSES IN PIPING FROM RWTM TO TURNOUT AT INSTANTANEOUS FLOW RATE _____ FEET

(3) HGL IN RWTM 1330 TO 1345 FEET

(4) HGL AT TURNOUT (HGL OF RWTM LESS FRICTION LOSSES CALCULATED ABOVE) _____ TO _____ FEET

(5) ELEVATION AT TURNOUT _____ FEET

(6) SUCTION PRESSURE AT TURNOUT _____ TO _____ PSI

(7) PUMP TDH _____ FEET

(8) DISCHARGE PRESSURE _____ PSI

DETAIL NO. C-404 PAGE 2 OF 12	CITY OF CHANDLER STANDARD DETAIL	**RECLAIMED WATER SERVICE CONNECTION DATA FORM**	APPROVED: _____ CITY ENGINEER DATE: June 12 08	DETAIL NO. C-404 PAGE 2 OF 12

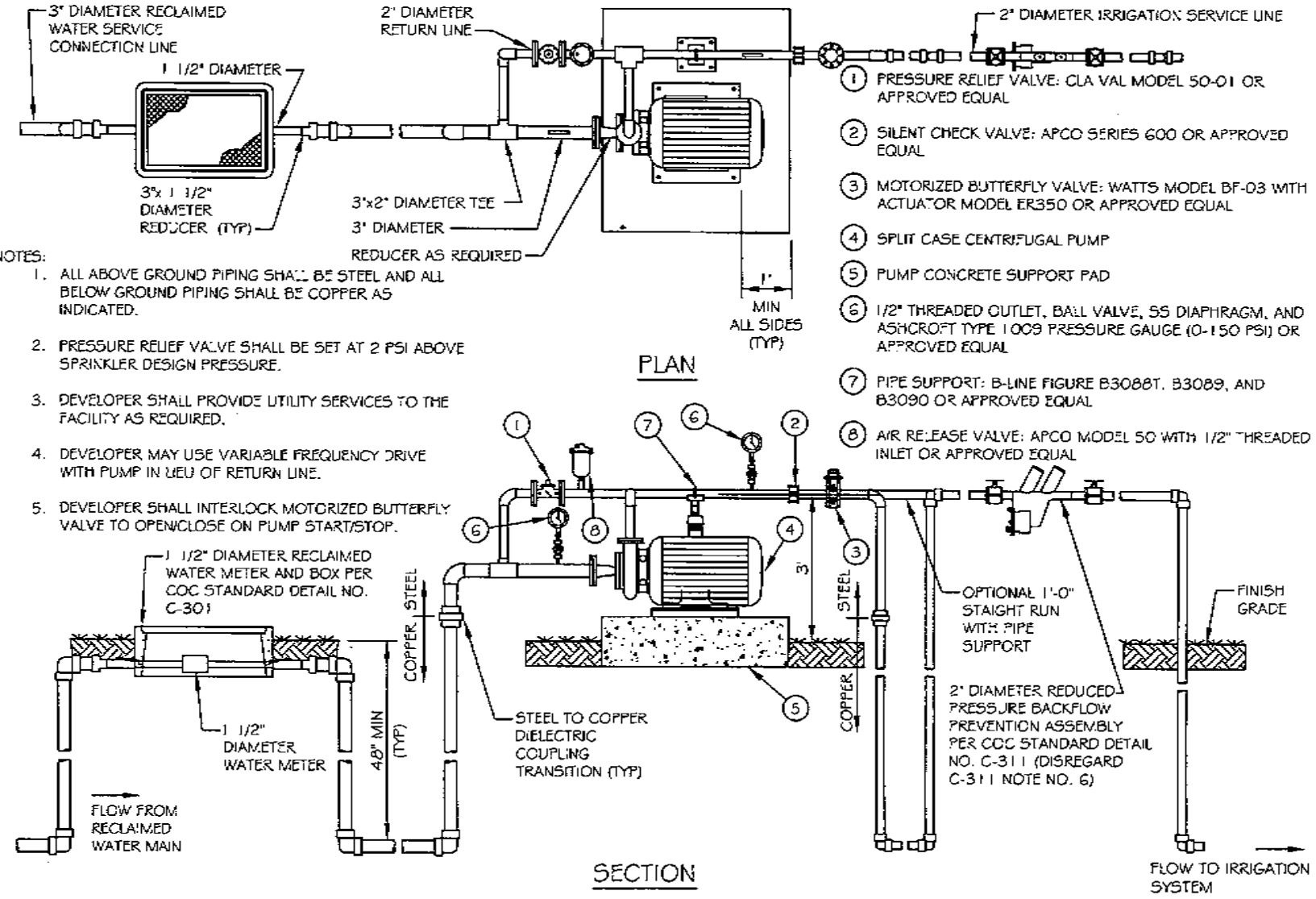

DETAIL NO. C-404 PAGE 3 OF 12	CITY OF CHANDLER STANDARD DETAIL	**2" RECLAIMED WATER IRRIGATION SERVICE LINE INLINE PUMP TYPE**	APPROVED: CITY ENGINEER DATE: June 12 08	DETAIL NO. C-404 PAGE 3 OF 12

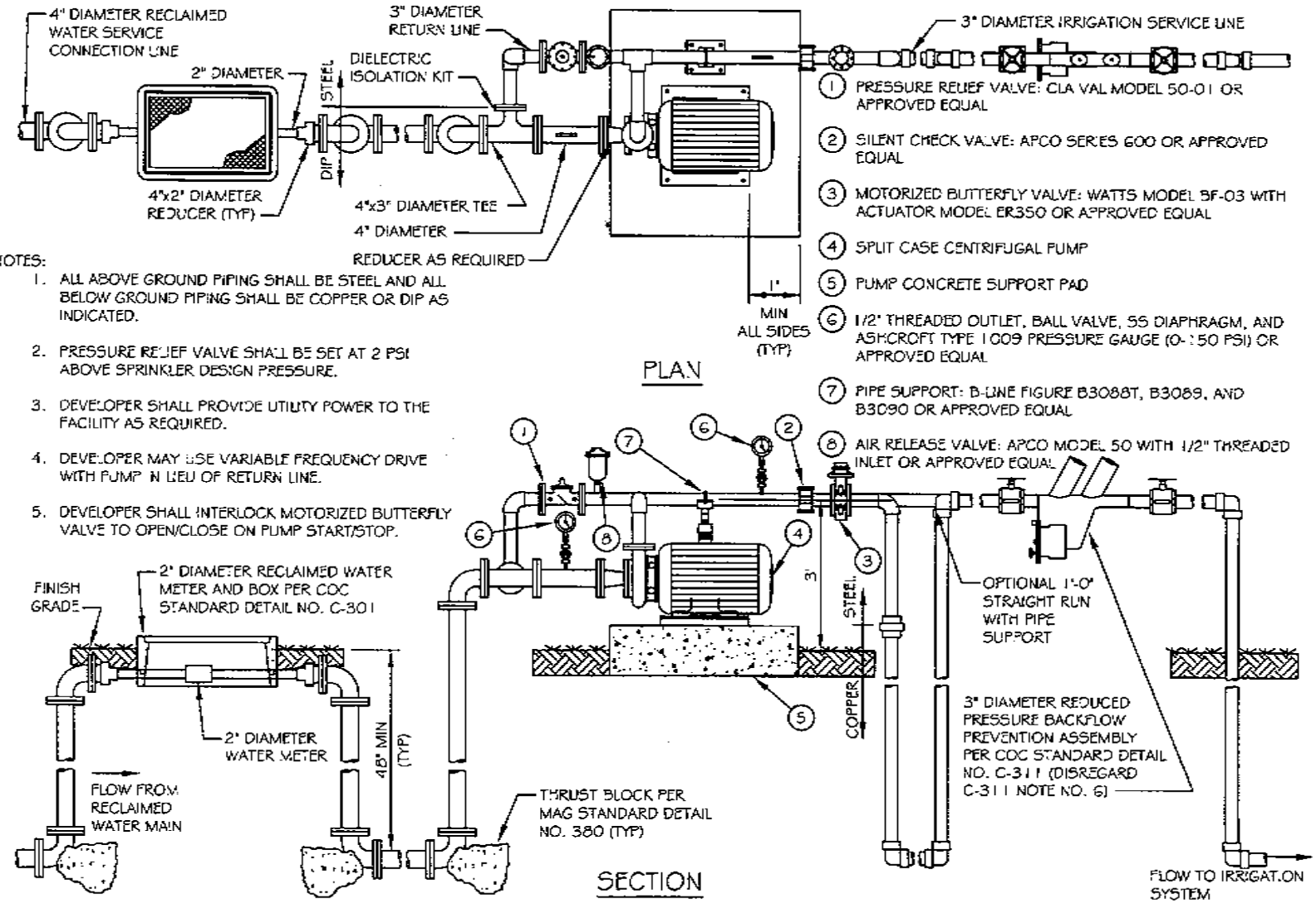

DETAIL NO. C-404 PAGE 4 OF 12	CITY OF CHANDLER STANDARD DETAIL	**3" RECLAIMED WATER IRRIGATION SERVICE LINE INLINE PUMP TYPE**	APPROVED: CITY ENGINEER DATE: June 12/08	DETAIL NO. C-404 PAGE 4 OF 12

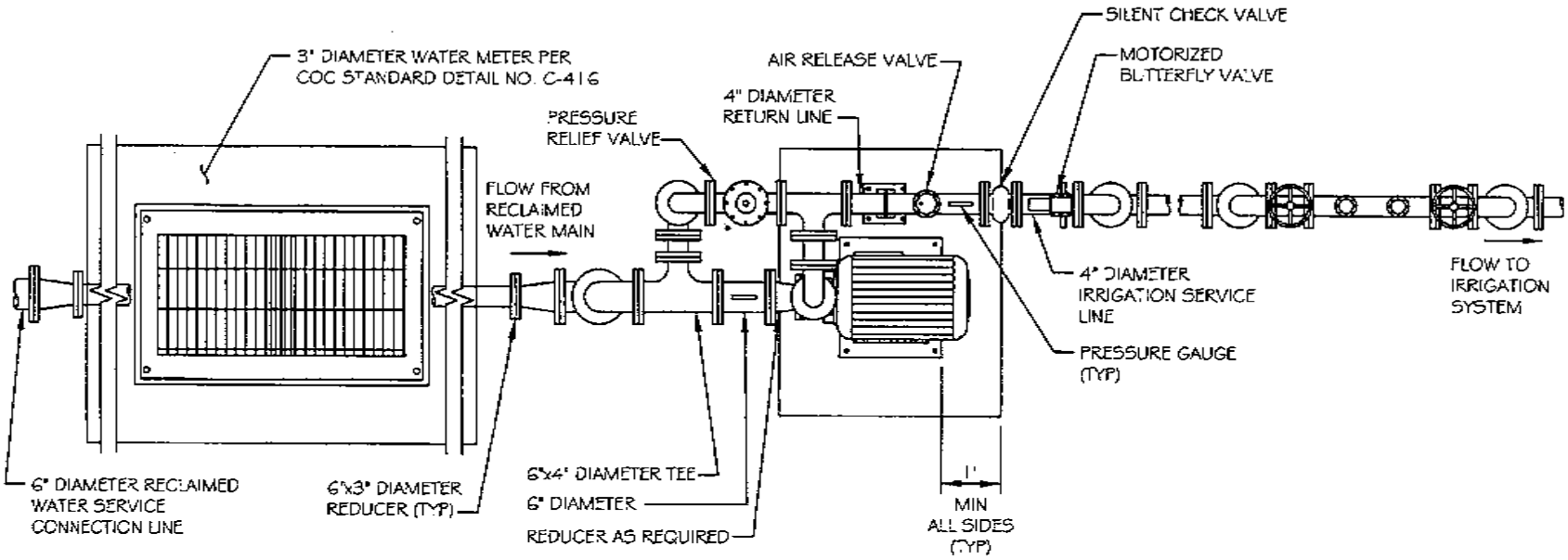

PLAN

NOTES:

1. ALL PIPING SHALL BE DUCTILE IRON (DIP) AS SHOWN.
2. PRESSURE RELIEF VALVE SHALL BE SET AT 2 PSI ABOVE SPRINKLER DESIGN PRESSURE.
3. DEVELOPER SHALL PROVIDE UTILITY SERVICES TO THE FACILITY AS REQUIRED.
4. DEVELOPER MAY USE VARIABLE FREQUENCY DRIVE WITH PUMP IN LIEU OF RETURN LINE.
5. DEVELOPER SHALL INTERLOCK MOTORIZED BUTTERFLY VALVE TO OPEN/CLOSE ON PUMP START/STOP.

DETAIL NO. C-404 PAGE 5 OF 12	CITY OF CHANDLER STANDARD DETAIL	**4" RECLAIMED WATER IRRIGATION SERVICE LINE INLINE PUMP TYPE**	APPROVED: CITY ENGINEER DATE: June 12/08	DETAIL NO. C-404 PAGE 5 OF 12

(1) PRESSURE RELIEF VALVE: CLA VAL MODEL 50-01 OR APPROVED EQUAL

(2) SILENT CHECK VALVE: APCO SERIES 600 OR APPROVED EQUAL

(3) MOTORIZED BUTTERFLY VALVE: MUELLER LINE SEAL III OR APPROVED EQUAL

(4) SPLIT CASE CENTRIFUGAL PUMP

(5) PUMP CONCRETE SUPPORT PAD

(6) 1/2" THREADED OUTLET, BALL VALVE, SS DIAPHRAGM, AND ASHCROFT TYPE 1009 PRESSURE GAUGE (0-150 PSI) OR APPROVED EQUAL

(7) PIPE SUPPORT: B-LINE FIGURE B3088T, B3089, AND B3090 OR APPROVED EQUAL

(8) AIR RELEASE VALVE: APCO MODEL 50 WITH 1" THREADED INLET OR APPROVED EQUAL

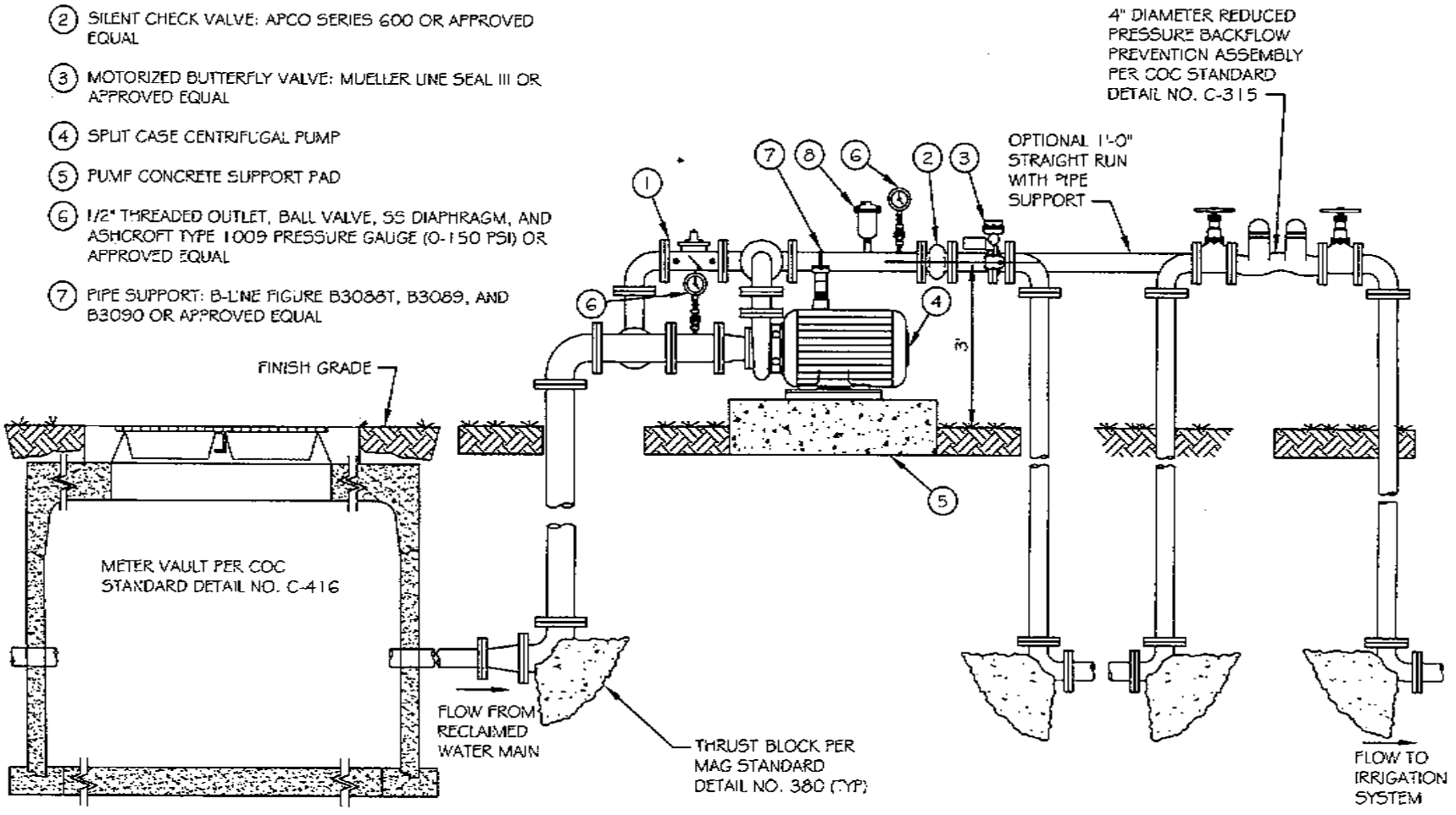

SECTION

DETAIL NO. C-404 PAGE 6 OF 12	CITY OF CHANDLER STANDARD DETAIL	**4" RECLAIMED WATER IRRIGATION SERVICE LINE INLINE PUMP TYPE**	APPROVED: CITY ENGINEER DATE: June 12, 08	DETAIL NO. C-404 PAGE 6 OF 12

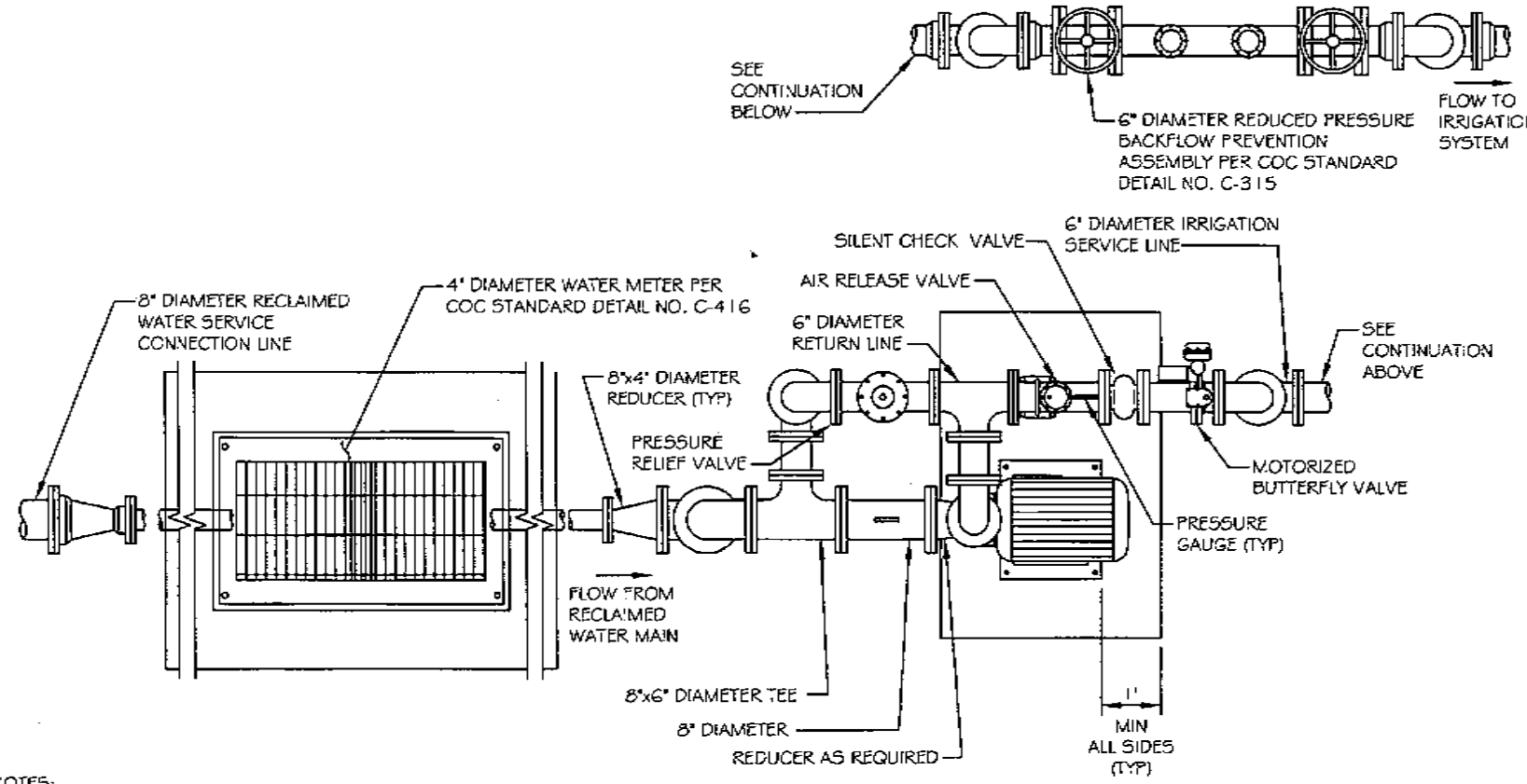

PLAN

NOTES:

1. ALL PIPING SHALL BE DUCTILE IRON (DIP) AS SHOWN.
2. PRESSURE RELIEF VALVE SHALL BE SET AT 2 PSI ABOVE SPRINKLER DESIGN PRESSURE.
3. DEVELOPER SHALL PROVIDE UTILITY SERVICES TO FACILITY AS REQUIRED.
4. DEVELOPER MAY USE VARIABLE FREQUENCY DRIVE WITH PUMP IN LIEU OF RETURN LINE.
5. DEVELOPER SHALL INTERLOCK MOTORIZED BUTTERFLY VALVE TO OPEN/CLOSE ON PUMP START/STOP.

DETAIL NO. C-404 PAGE 7 OF 12	CITY OF CHANDLER STANDARD DETAIL	**6" RECLAIMED WATER IRRIGATION SERVICE LINE INLINE PUMP TYPE**	APPROVED: CITY ENGINEER DATE: June 12 '08	DETAIL NO. C-404 PAGE 7 OF 12

(1) PRESSURE RELIEF VALVE: CLA VAL MODEL 50-01 OR APPROVED EQUAL

(2) SILENT CHECK VALVE: APCO SERIES 600 OR APPROVED EQUAL

(3) MOTORIZED BUTTERFLY VALVE: MUELLER LINE SEAL III OR APPROVED EQUAL

(4) SPLIT CASE CENTRIFUGAL PUMP

(5) PUMP CONCRETE SUPPORT PAD

(6) 1/2" THREADED OUTLET, BALL VALVE, SS DIAPHRAGM, AND ASHCROFT TYPE 1009 PRESSURE GAUGE (0-150 PSI) OR APPROVED EQUAL

(7) PIPE SUPPORT: B-LINE FIGURE B3088T, B3089, AND B3090 OR APPROVED EQUAL

(8) AIR RELEASE VALVE: APCO MODEL 50 WITH 1" THREADED INLET OR APPROVED EQUAL

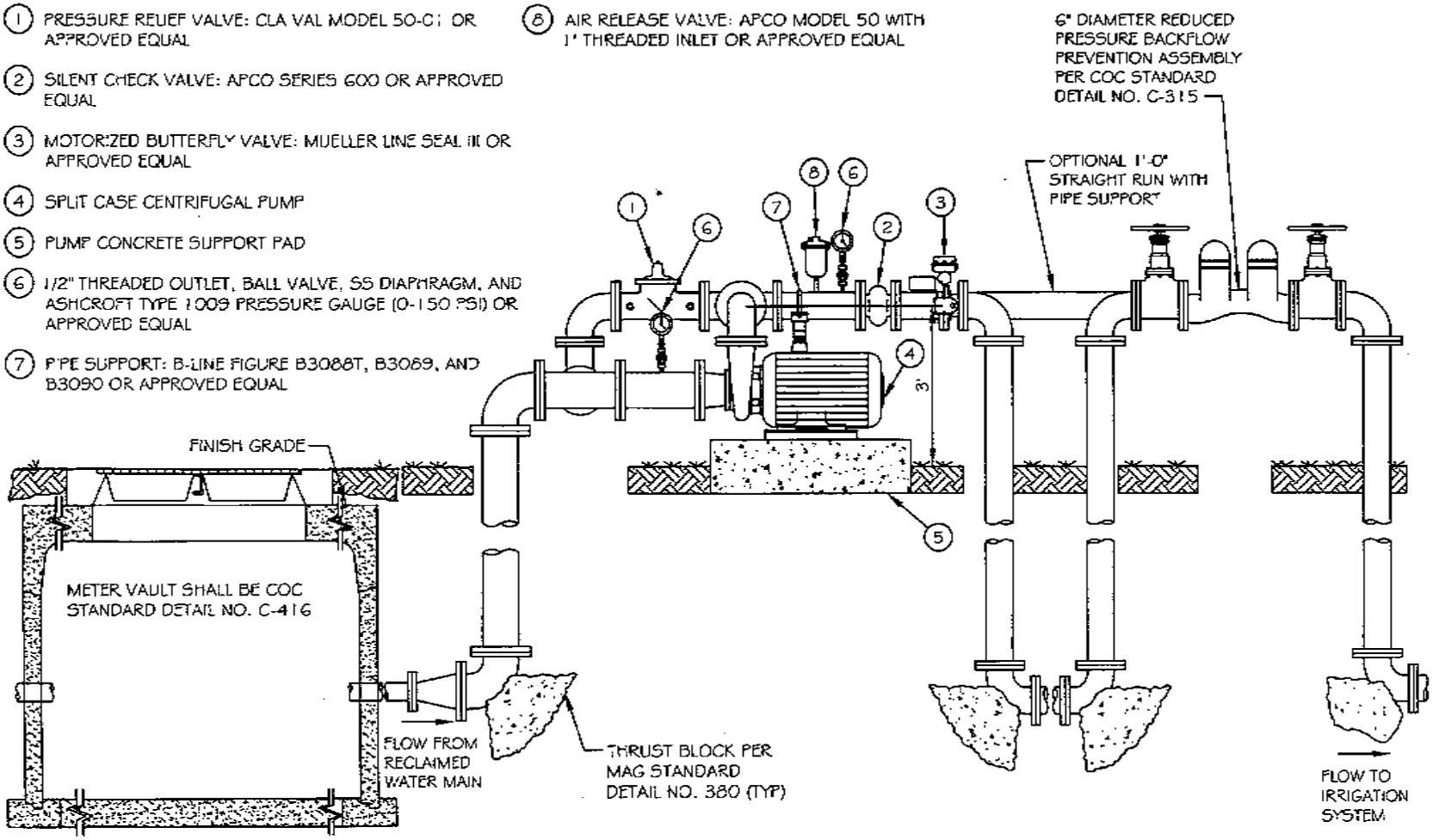

SECTION

DETAIL NO. C-404 PAGE 8 OF 12	CITY OF CHANDLER STANDARD DETAIL	**6" RECLAIMED WATER IRRIGATION SERVICE LINE INLINE PUMP TYPE**	APPROVED: CITY ENGINEER DATE: June 12/08	DETAIL NO. C-404 PAGE 8 OF 12

(1) PRESSURE RELIEF VALVE : CLA VAL MODEL 6506-01B OR APPROVED EQUAL

(2) THRUST BLOCK PER MAG STANDARD DETAIL NO. 380 (TYP)

(3) PROPERTY SHALL BE FENCED WITH 6 FOOT BLOCK WALL TO MATCH THE SURROUNDING WALL THEME

(4) PROVIDE 6"x3" REDUCER FOR CONTINUATION OF INSTALLATION OF 6" DIAMETER WATER SERVICE CONNECTION LINE, REDUCER SHALL BE LOCATED 2'-0" MAX FROM METER VAULT

(5) AIR RELEASE VALVE: APCO MODEL 50 WITH 1/2" THREADED INLET OR APPROVED EQUAL

NOTES:

1. PRESSURE RELIEF VALVE SHALL BE SET AT 2 PSI ABOVE SPRINKLER DESIGN PRESSURE.
2. DEVELOPER SHALL PROVIDE UTILITY SERVICES TO THE FACILITY AS REQUIRED.
3. DEVELOPER MAY USE VARIABLE FREQUENCY DRIVE WITH PUMP IN LIEU OF RETURN LINE.
4. DEVELOPER SHALL INTERLOCK MOTORIZED BUTTERFLY VALVE TO OPEN/CLOSE ON PUMP START/STOP.

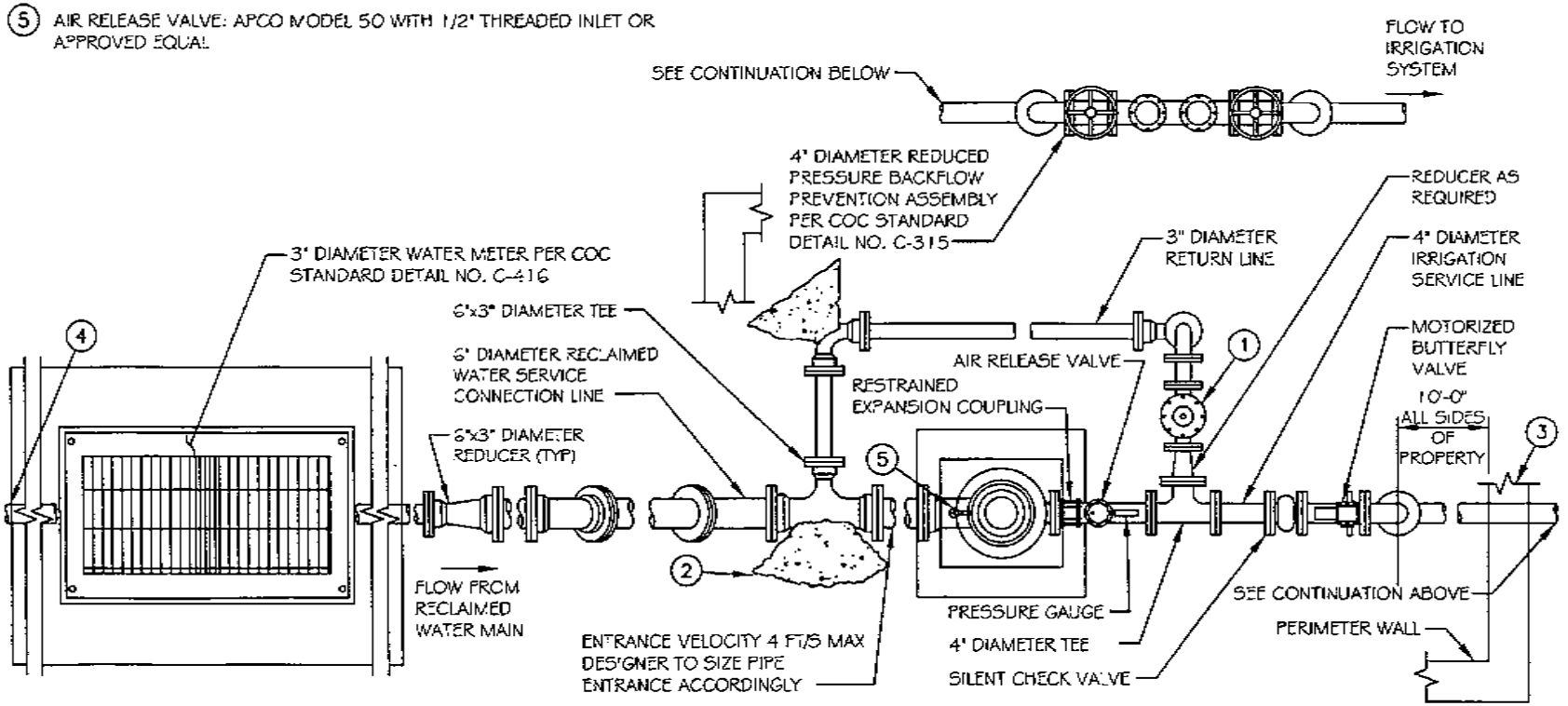

PLAN

DETAIL NO. C-404 PAGE 9 OF 12	CITY OF CHANDLER STANDARD DETAIL	4" RECLAIMED WATER IRRIGATION SERVICE LINE CAN PUMP TYPE	APPROVED: CITY ENGINEER DATE: June 12 '08	DETAIL NO. C-404 PAGE 9 OF 12

1. EPOXY LINED STEEL PUMP CAN. THICKNESS PER PUMP MANUFACTURER
2. 6" CEMENT GROUT SEAL AROUND ENTIRE CAN
3. 4" WIDE BY 1/2" THICK STEEL THRUST COLLAR FULL WELD TO PUMP CAN
4. PUMP SUPPORT BLOCK
5. VERTICAL TURBINE PUMP
6. SILENT CHECK VALVE: APCO SERIES 600 OR APPROVED EQUAL
7. MOTORIZED BUTTERFLY VALVE: MUELLER LINE SEAL III OR APPROVED EQUAL
8. RESTRAINED EXPANSION COUPLING: DRESSER STYLE 127 OR APPROVED EQUAL
9. 1/2" THREADED OUTLET, BALL VALVE, SS DIAPHRAGM, AND ASHCROFT TYPE 1009 PRESSURE GAUGE (0-150 PSI) OR APPROVED EQUAL
10. PROPERTY SHALL BE FENCED WITH 6 FOOT BLOCK WALL TO MATCH THE SURROUNDING WALL THEME
11. DIELECTRIC COUPLING
12. GROUT AROUND ENTIRE MECHANICAL JOINT
13. AIR RELEASE VALVE: APCO MODEL 50 WITH 1" THREADED INLET OR APPROVED EQUAL

NOTE:

1. ALL PIPING SHALL BE DUCTILE IRON (DIP) AS SHOWN.

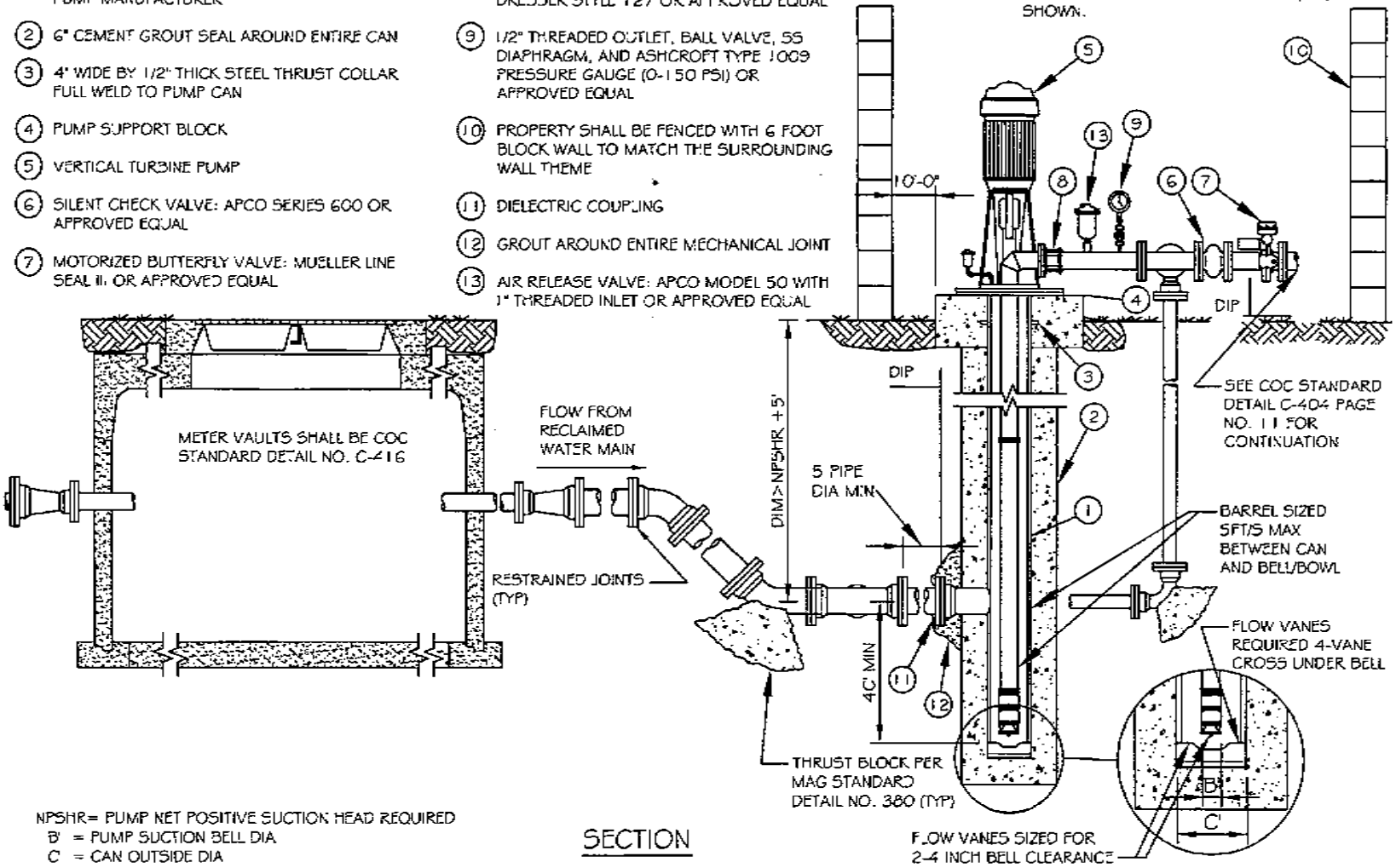

NPSHR= PUMP NET POSITIVE SUCTION HEAD REQUIRED
B' = PUMP SUCTION BELL DIA
C = CAN OUTSIDE DIA

SECTION

DETAIL NO. C-404 PAGE 10 OF 12	CITY OF CHANDLER STANDARD DETAIL	4" RECLAIMED WATER IRRIGATION SERVICE LINE CAN PUMP TYPE	APPROVED: CITY ENGINEER DATE: June 12/08	DETAIL NO. C-404 PAGE 10 OF 12

1. PRESSURE RELIEF VALVE - CLA VAL MODEL 6506-01B OR APPROVED EQUAL
2. THRUST BLOCK PER MAG STANDARD DETAIL NO. 380 (TYP)
3. PROPERTY SHALL BE FENCED WITH 6 FOOT BLOCK WALL TO MATCH THE SURROUNDING WALL THEME
4. PROVIDE 8"x4" REDUCER FOR CONTINUATION OF INSTALLATION OF 8" DIAMETER WATER SERVICE CONNECTION LINE, REDUCER SHALL BE LOCATED 2' MAX FROM METER VAULT
5. AIR RELEASE VALVE: APCO MODEL 50 WITH 1/2" THREADED INLET OR APPROVED EQUAL

NOTES:

1. PRESSURE RELIEF VALVE SHALL BE SET AT 2 PSI ABOVE SPRINKLER DESIGN PRESSURE.
2. DEVELOPER SHALL PROVIDE UTILITY SERVICES TO THE FACILITY AS REQUIRED.
3. DEVELOPER MAY USE VARIABLE FREQUENCY DRIVE WITH PUMP IN LIEU OF RETURN LINE.
4. DEVELOPER SHALL INTERLOCK MOTORIZED BUTTERFLY VALVE TO OPEN/CLOSE ON PUMP START/STOP.

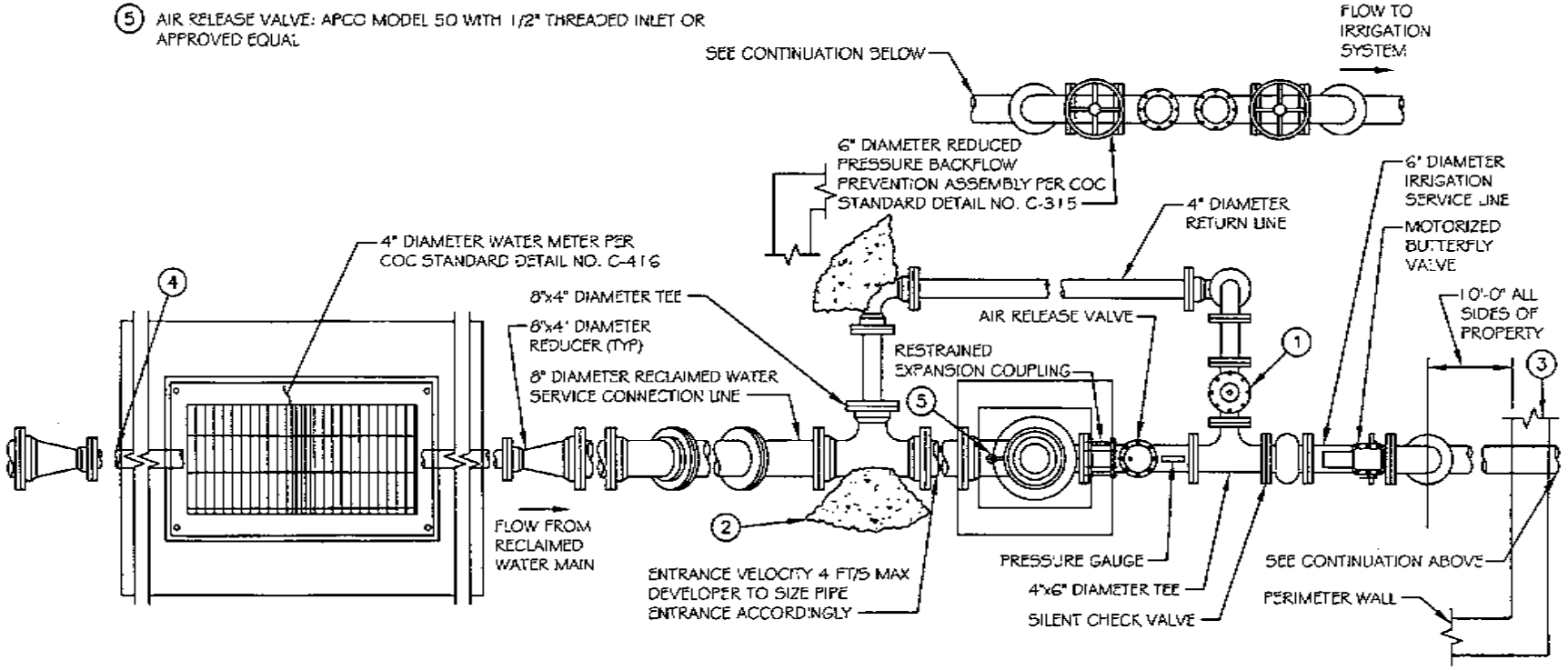

DETAIL NO. C-404 PAGE 11 OF 12	CITY OF CHANDLER STANDARD DETAIL	6" RECLAIMED WATER IRRIGATION SERVICE LINE CAN PUMP TYPE	APPROVED: [signature] CITY ENGINEER DATE: June 12/08	DETAIL NO. C-404 PAGE 11 OF 12

1. EPOXY LINED STEEL PUMP CAN, THICKNESS PER PUMP MANUFACTURER
2. 6" CEMENT GROUT SEAL AROUND ENTIRE CAN
3. 4" WIDE BY 1/2" THICK STEEL THRUST COLLAR FULL WELD TO PUMP CAN
4. PUMP SUPPORT BLOCK
5. VERTICAL TURBINE PUMP
6. SILENT CHECK VALVE: APCO SERIES 600 OR APPROVED EQUAL
7. MOTORIZED BUTTERFLY VALVE: MUELLER LINE SEAL III OR APPROVED EQUAL
8. RESTRAINED EXPANSION COUPLING: DRESSER STYLE 127 OR APPROVED EQUAL
9. 1/2" THREADED OUTLET, BALL VALVE, SS DIAPHRAGM, AND ASHCROFT TYPE 1009 PRESSURE GAUGE (0-150 PSI) OR APPROVED EQUAL
10. PROPERTY SHALL BE FENCED WITH 6 FOOT BLOCK WALL TO MATCH THE SURROUNDING WALL THEME
11. DIELECTRIC COUPLING
12. GROUT AROUND ENTIRE MECHANICAL JOINT
13. AIR RELEASE VALVE: APCO MODEL 150 WITH 1" THREADED INLET OR APPROVED EQUAL

NOTE:

1. ALL PIPING SHALL BE DUCTILE IRON (DIP) AS SHOWN

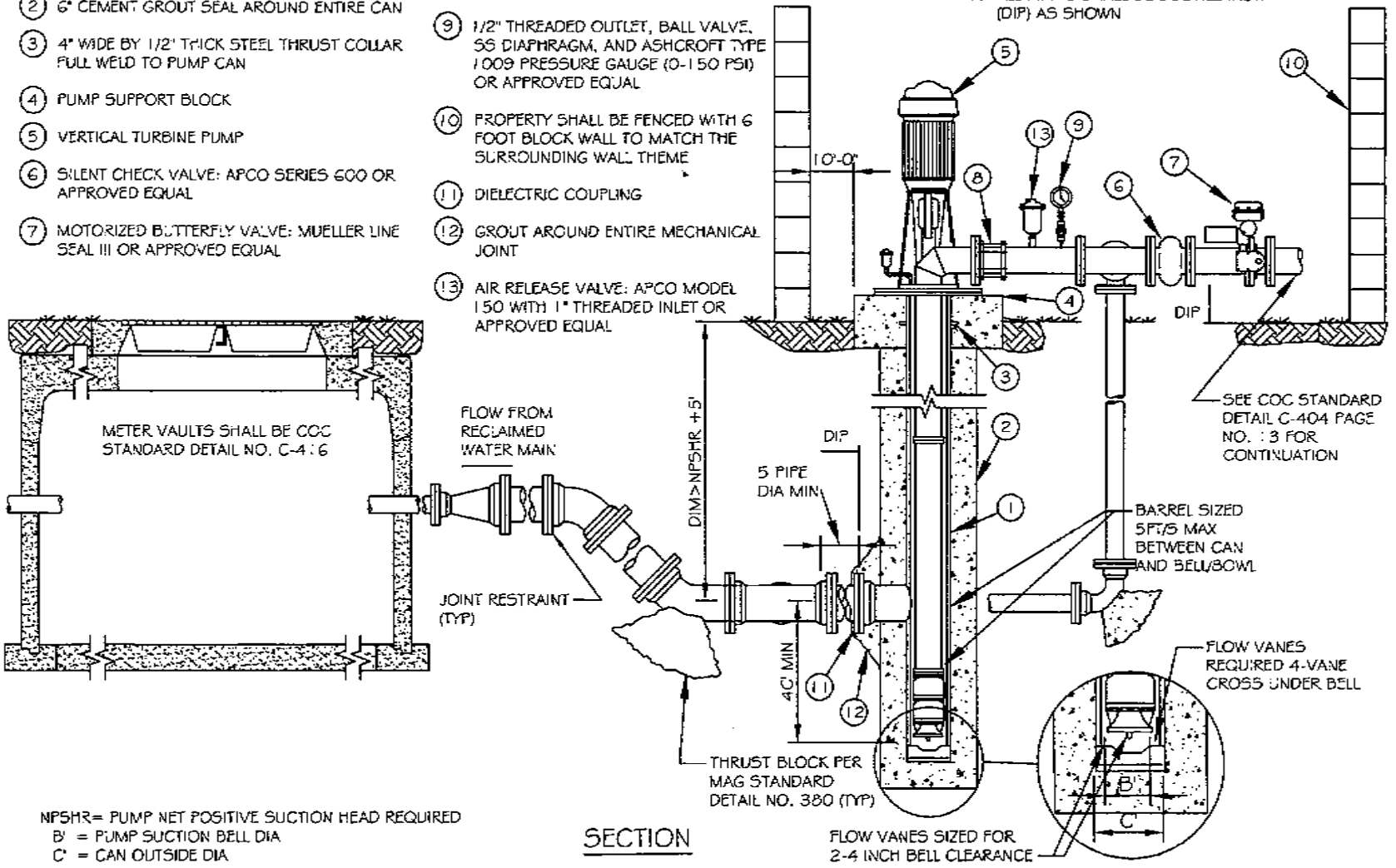

NPSHR= PUMP NET POSITIVE SUCTION HEAD REQUIRED
B' = PUMP SUCTION BELL DIA
C' = CAN OUTSIDE DIA

SECTION

DETAIL NO. C-404 PAGE 12 OF 12	CITY OF CHANDLER STANDARD DETAIL	6" RECLAIMED WATER IRRIGATION SERVICE LINE CAN PUMP TYPE	APPROVED: CITY ENGINEER DATE: June 12 '08	DETAIL NO. C-404 PAGE 12 OF 12

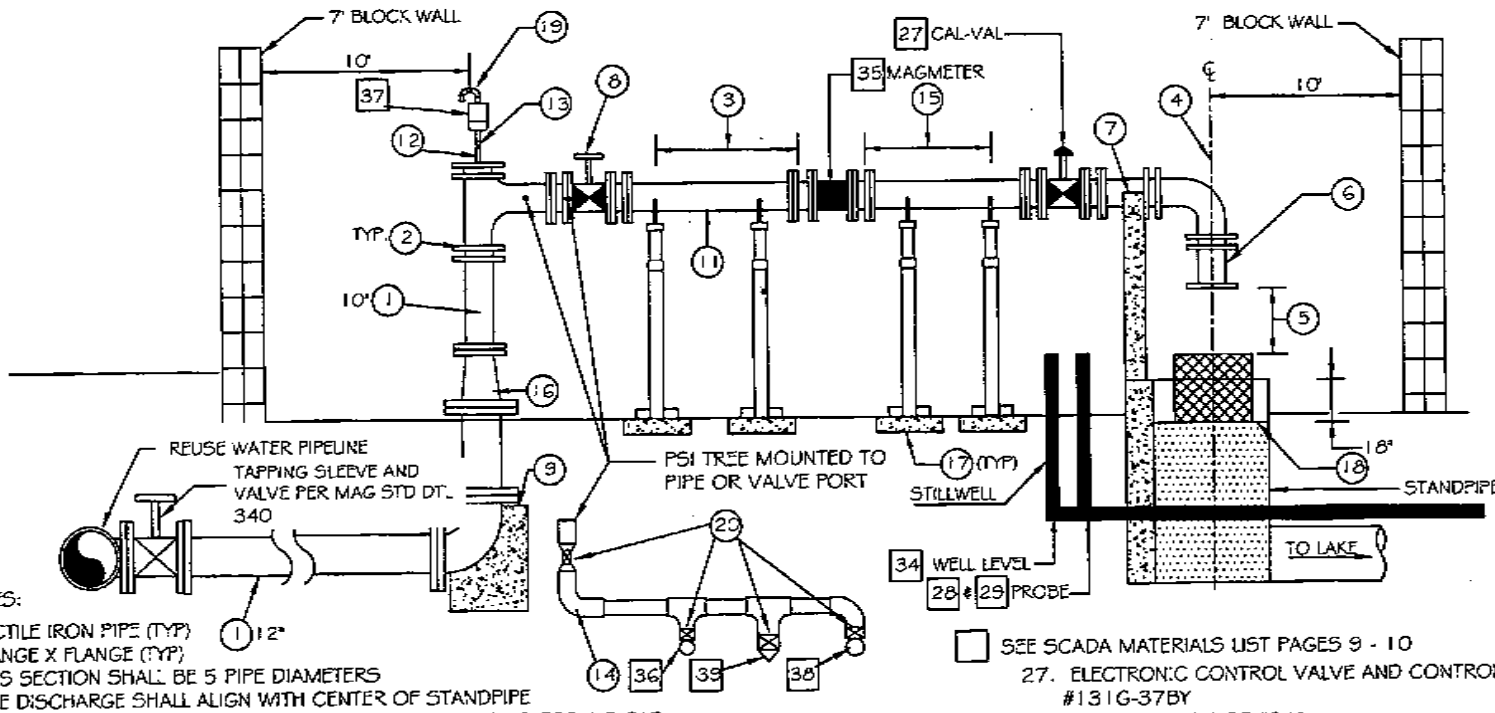

NOTES:

1. DUCTILE IRON PIPE (TYP)
2. FLANGE X FLANGE (TYP)
3. THIS SECTION SHALL BE 5 PIPE DIAMETERS
4. PIPE DISCHARGE SHALL ALIGN WITH CENTER OF STANDPIPE
5. THIS SPACING SHALL BE GREATER THAN 2 PIPE DIAMETERS FOR AIR GAP
6. 1' SPOOL PIECE
7. PROVIDE CONCRETE SUPPORTS AS SHOWN
8. PROVIDE RESILIENT SEAT GATE VALVE
9. PROVIDE THRUST BLOCK PER MAG STD DTL 380
10. (NOT USED)
11. 10" D.I.P., TYP.
12. ALL 2" & 1" PIPE SHOULD BE BRASS
13. 2" BALL-CORP VALVE BRASS MALE IN/OUT
14. 1" PSI TREE-SEE DETAIL-BRASS
15. THIS SECTION SHALL BE 3 PIPE DIAMETERS
16. REDUCER MAY BE INSTALLED 12" X 10"
17. PIPE SUPPORTS BOLTED TO 6" CONCRETE FOOTING (TYP)
18. METAL GRATE BOX OVER TOP OF STANDPIPE
19. ALL BRASS FITTINGS
20. 1" BALL-CORP VALVE BRASS

SEE SCADA MATERIALS LIST PAGES 9 - 10

27. ELECTRONIC CONTROL VALVE AND CONTROLLER CLA-VAL #131G-37BY
28. LEVEL PROBE WIRE #3WI
29. PROBE FITTING 3E-3B
34. WELL LEVEL TRANSDUCER CWLTY
35. MAG METER CADILLAC #CMAGxRCF150SSFM
36. GAUGE #AX9831741-4
37. AIR RELIEF/VACUUM CHECK 2" #144DAT.1-F2-1C/57
38. PRESSURE TRANSMITTER #CPLVY-0303-2013-Z-RNG
39. CALIBRATION PORT: BRASS

NOTES:

1. PROPERTY SHALL BE DEDICATED TO CITY AND KEYED TO CITY LOCK SYSTEM.
2. PROPERTY SHALL BE FENCED WITH 7' BLOCK WALL TO MATCH THE SURROUNDING WALL THEME.
3. THE TURNOUT STRUCTURE SHALL HAVE THE CAPACITY TO CONVEY 2,000 GPM WITHOUT OVERFLOWING.
4. WIRING TRENCH AND JUNCTION BOXES SHALL BE LOCATED ON FAR SIDE OF PIPE AWAY FROM GATE.

DETAIL NO. C-405 NTS	CITY OF CHANDLER STANDARD DETAIL	**LARGE WATER USER (WITH LAKE) RECLAIMED WATER TURNOUT**	APPROVED: CITY ENGINEER DATE: 01/08/09	DETAIL NO. C-405 PAGE 1 OF 12

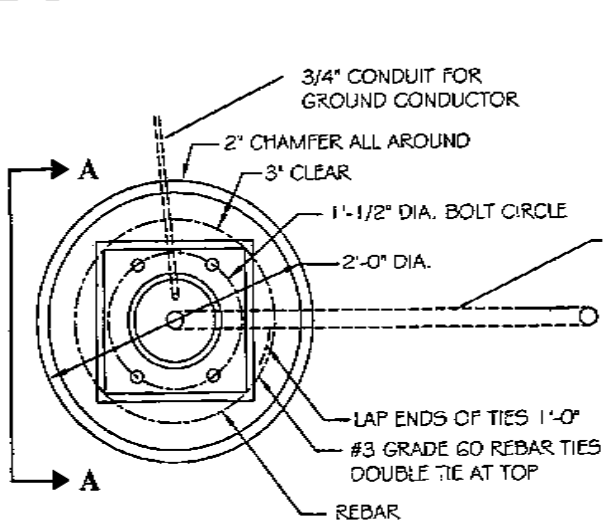

FOUNDATION PLAN

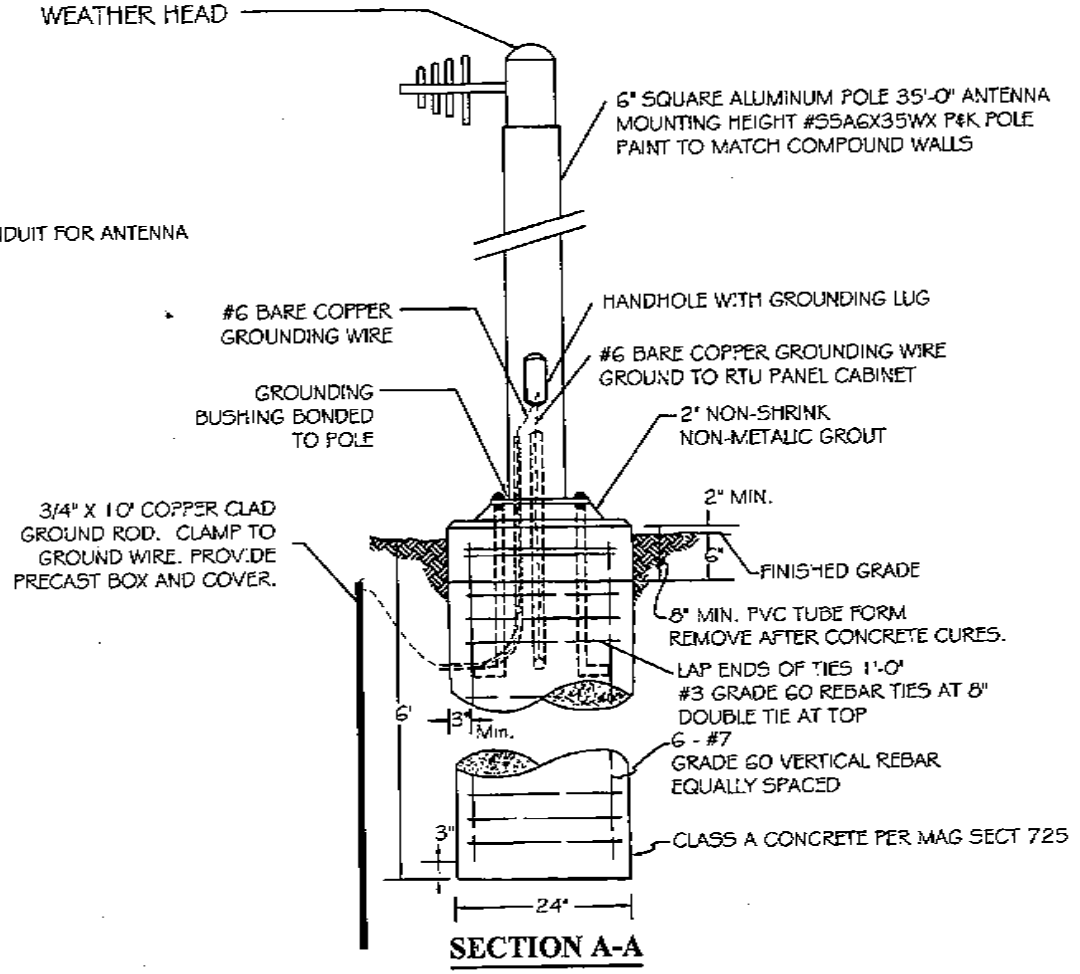

SECTION A-A

NOTES:

1. THE COMPLETE INSTALLATION SHALL WITHSTAND 110 MHP WINDS.
2. ANCHOR BOLTS, LEVELING NUTS, AND POLE BASE SHALL BE FABRICATED BY POLE MANUFACTURER.

DETAIL NO. C-405 NTS	CITY OF CHANDLER STANDARD DETAIL	ANTENNA	APPROVED: CITY ENGINEER DATE: 01/08/09	DETAIL NO. C-405 PAGE 2 OF 12

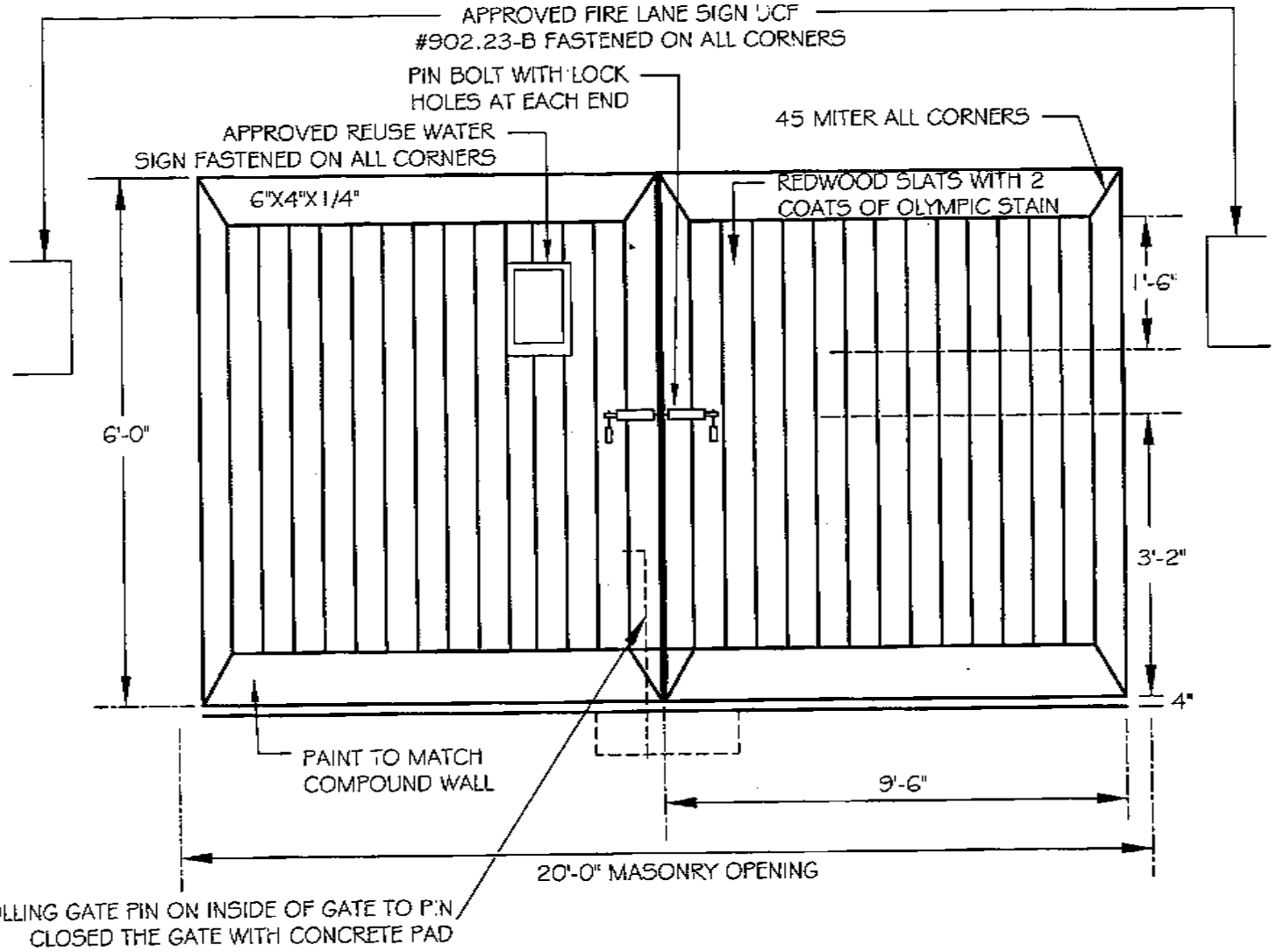

DETAIL NO. C- 405 NTS	CITY OF CHANDLER STANDARD DETAIL	**ROLLING GATE**	APPROVED: _____ CITY ENGINEER DATE: 01/08/09	DETAIL NO. C- 405 PAGE 3 OF 12

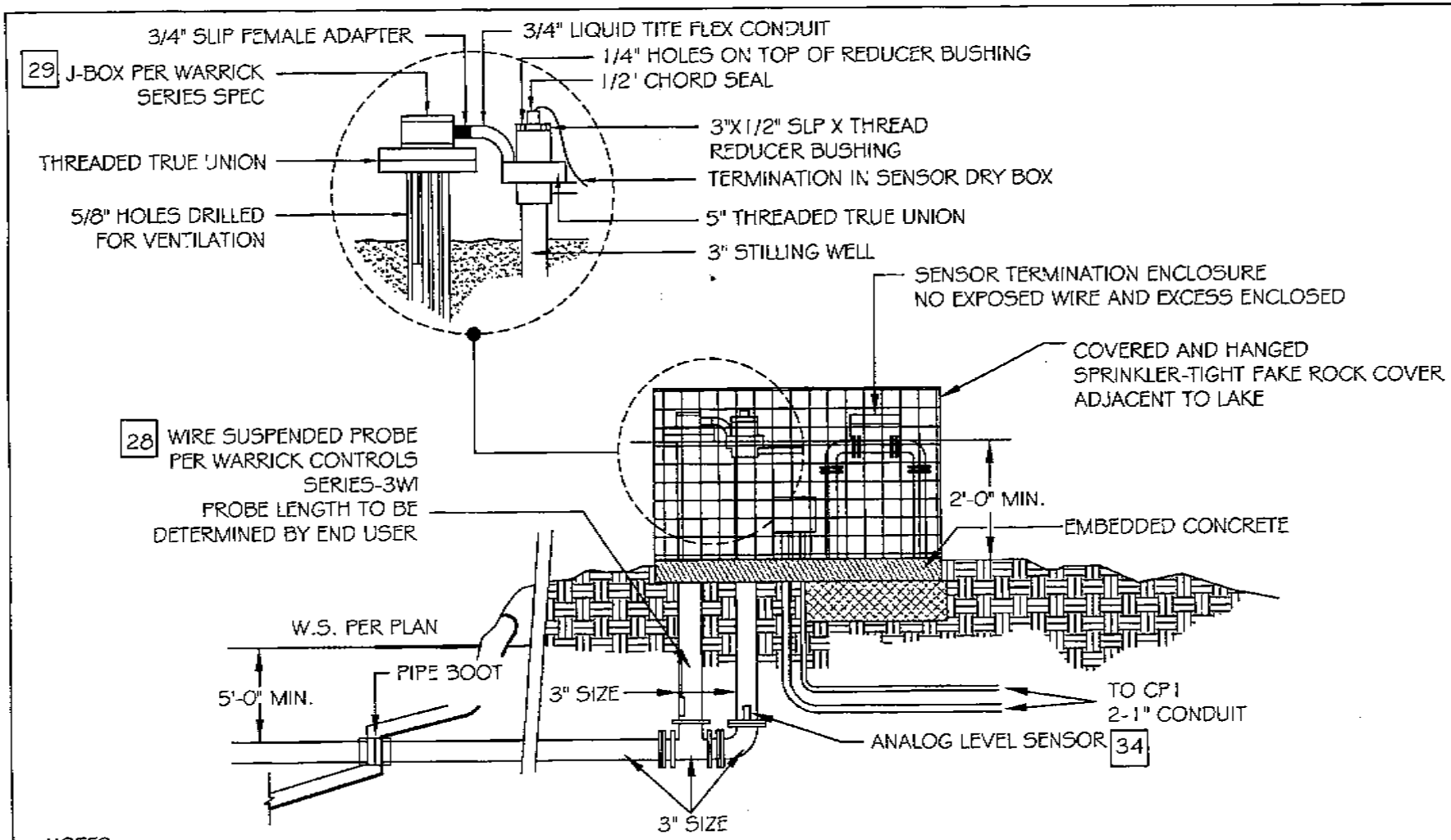

NOTES:

1. LEVEL SENSORS MAY BE LOCATED WITHIN WALLED TURNOUT COMPOUND OR ADJACENT TO LAKE.
2. WHERE ADJACENT TO LAKE, LEVEL SENSORS SHALL BE PROTECTED BY A SCREENED ENCLOSURE COVER BY SIMULATED ROCK.
3. SIMULATED ROCK SHALL BE KRUP.COM INC #AE-CROWN, ORBIT IRRIGATION PRODUCTS INC #35016 GRANITE ROCK BOX, OR ARMORCAST PRODUCTS #P218
4. LEVEL CONTROL LOCATION SHALL BE FIELD LOCATED IN CONSULTATION WITH MR. DAVID CLARK (480) 783-3720

DETAIL NO. C- 405 NTS	CITY OF CHANDLER STANDARD DETAIL	**LEVEL SENSORS**	APPROVED: _____ CITY ENGINEER DATE: 01/08/09	DETAIL NO. C- 405 PAGE 4 OF 12

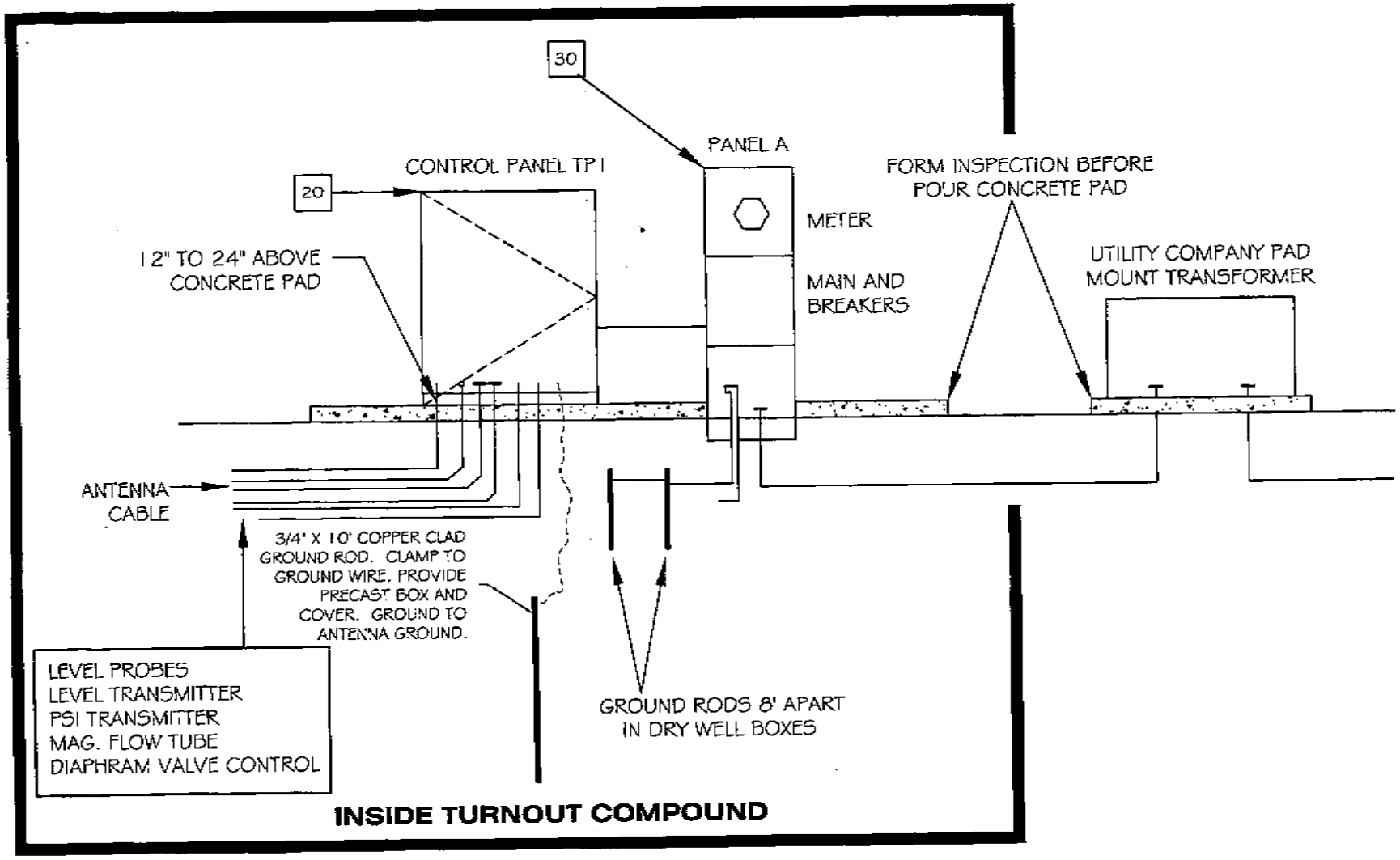

INSIDE TURNOUT COMPOUND

DETAIL NO. C-405 NTS	CITY OF CHANDLER STANDARD DETAIL	**METERPED**	APPROVED: CITY ENGINEER DATE: 01/08/09	DETAIL NO. C-405 PAGE 5 OF 12

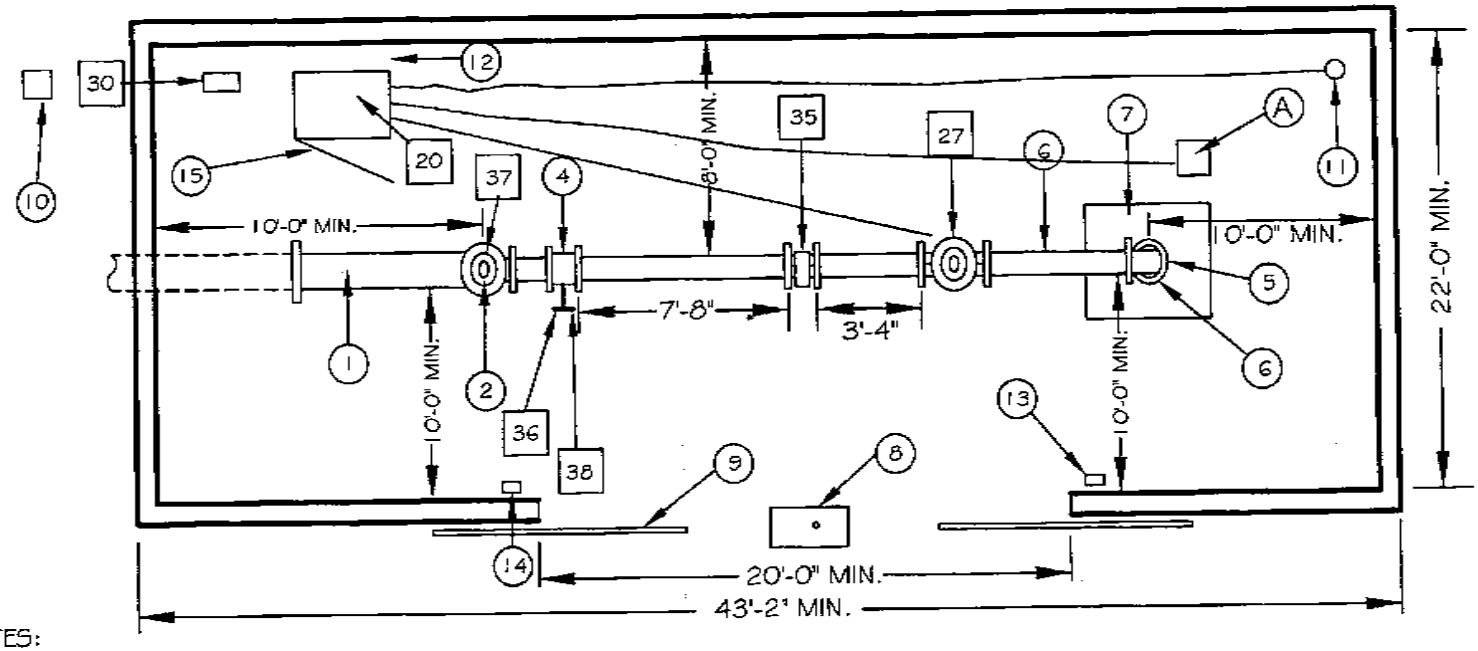

NOTES:

1	12" DUCTILE IRON PIPE
2	2" BALL-CORP. STOP-MALE BRASS PIPE IN/OUT
3	12"X10" CONCENTRIC REDUCER (NOT SHOWN)
4	10" VALVE PER "KENNEDY VALVE" KENSEAL II WITH FLANGED ENDS
5	10" DUCTILE IRON 90 DEGREE ELBOW
6	10" DUCTILE IRON SPOOL PIECE
7	SAFETY SCREEN
8	ROLLING GATE PIN PAD
9	ROLLING GATE PIN ON INSIDE
10	UTILITY COMPANY PAD MOUNT TRANSFORMER
11	ANTENNA
12	MAINTAIN 2' CLEARANCE
13	LIGHT & AC OUTLET
14	LIGHT AC OUTLET & SWITCH
15	DOOR OPENING AS SHOWN
A	LEVEL SENSORS

BOXED NOTES - SEE SCADA MATERIAL LISTS PAGES 9 & 10

20	CONTROL PANEL
27	CLA-VAL ELECTRIC VALVE
30	SRP METER PAD
35	10" MAG. METER
36	4" PRESSURE GAUGE
37	2" AIR RELEASE VALVE/VACUUM CHECK
38	PRESSURE TRANSMITTER

ALL CONDUIT RUNS SHALL BE LOCATED ON CONTROL PANEL SIDE OF COMPOUND.

DETAIL NO. **C- 405** NTS	CITY OF CHANDLER STANDARD DETAIL	**TURNOUT COMPOUND**	APPROVED: CITY ENGINEER DATE: 01/06/09	DETAIL NO. **C- 405** PAGE 6 OF 12

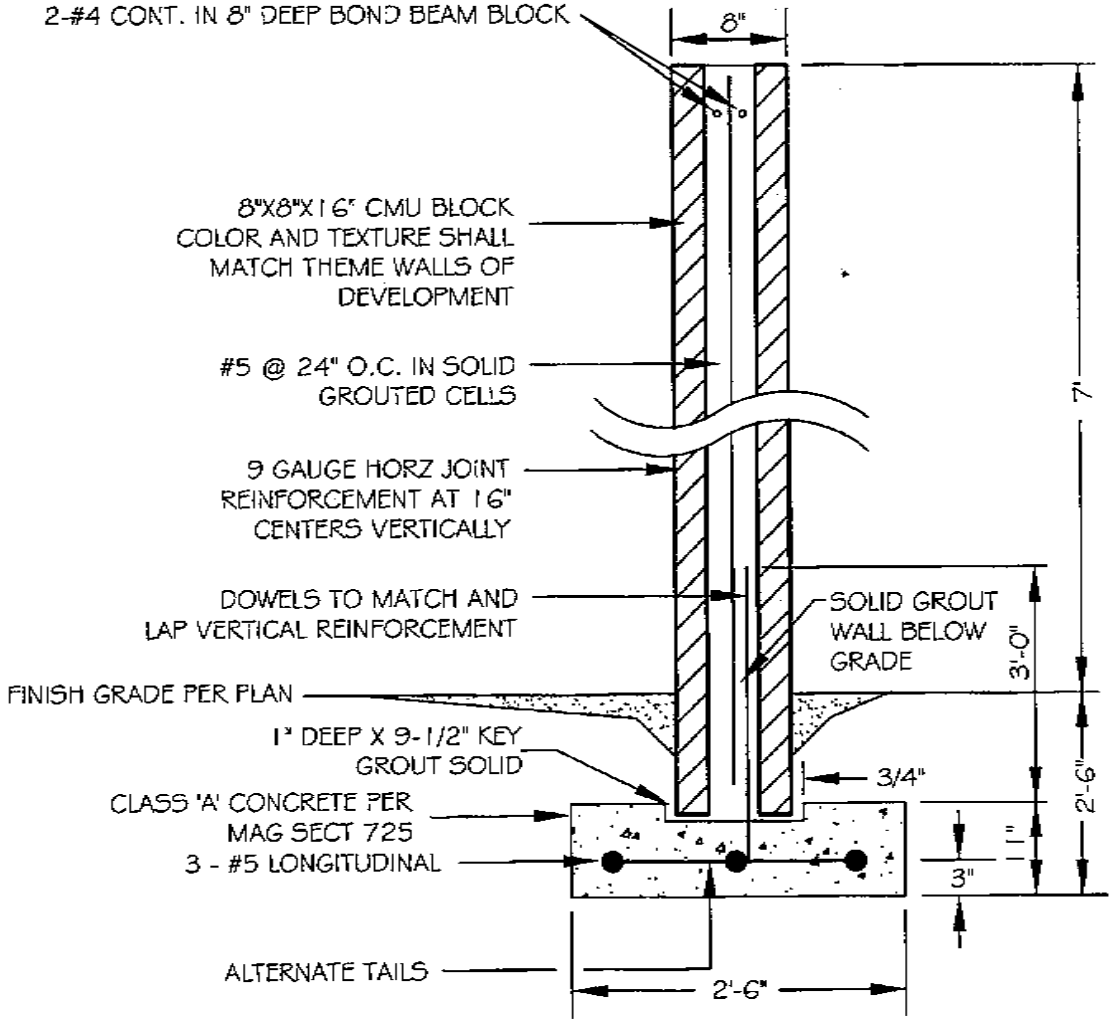

NOTES

CONSTRUCTION IN ACCORDANCE WITH MAG SECT 510

CONCRETE SHALL BE IN ACCORDANCE WITH MAG SECT 725

REINFORCING STEEL SHALL CONFORM TO ASTM SPEC A615 GRADE 60

CONTROL JOINTS AT 24' INTERVALS

MASONRY: f'm=1500 psi, ASTM C90, MEDIUM OR NORMAL WEIGHT, RUNNING BOND, SLUMP BLOCK.

MORTAR: ASTM C270, TYPE S

GROUT: ASTM C476, TYPE COARSE

JOINT REINFORCEMENT: 9 GAUGE LADDER OR TRUSS TYPE, STANDARD WEIGHT, fy=33,000psi, WIRE PER ASTM A82

DETAIL NO. C-405 NTS	CITY OF CHANDLER STANDARD DETAIL	**COMPOUND WALL**	APPROVED: CITY ENGINEER DATE: 01/08/09	DETAIL NO. C-405 PAGE 7 OF 12

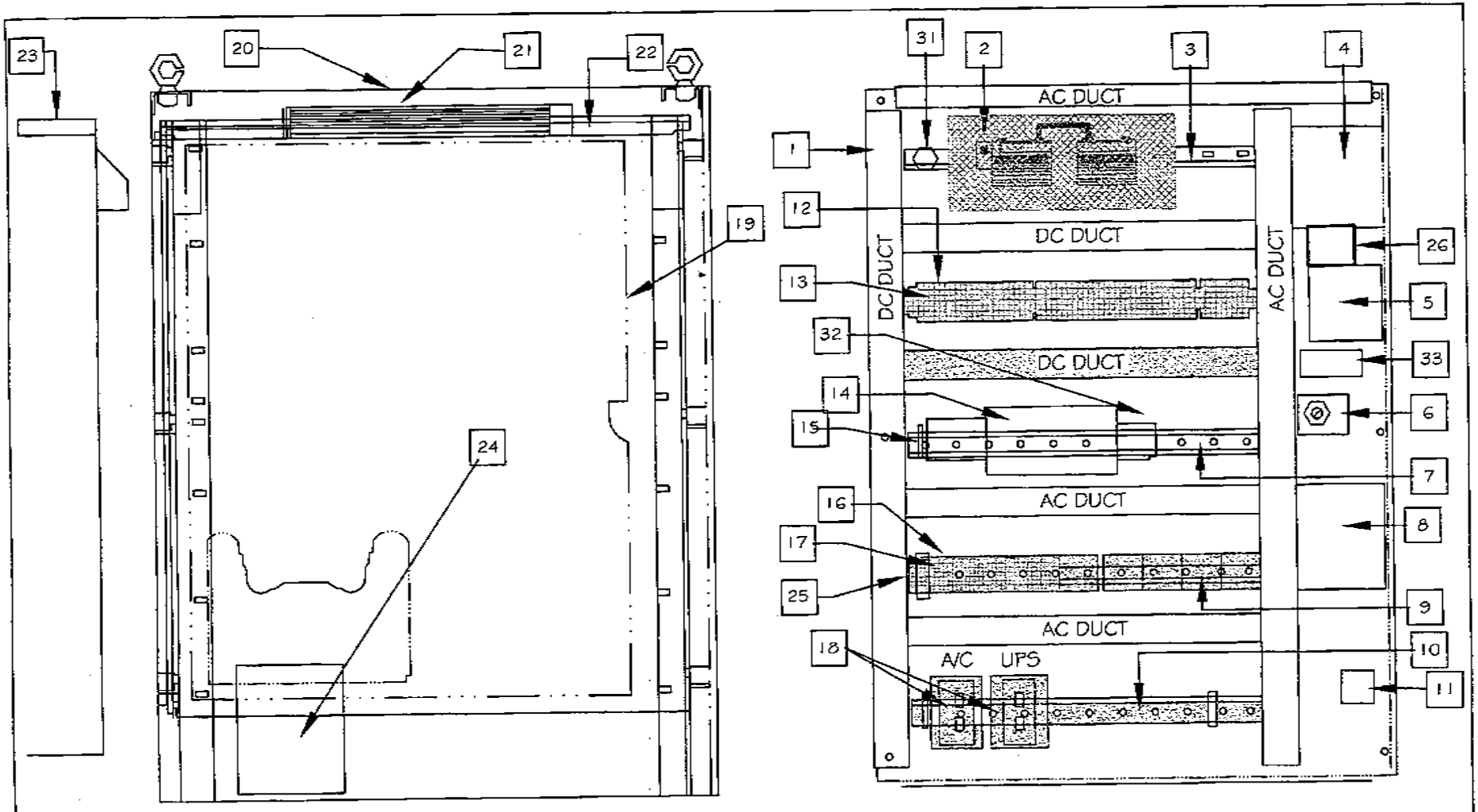

SEE SCADA MATERIAL LIST
PAGES 9 - 10

AC WIRING - RED COLORING HOT
AC WIRING - WHITE COLORING COMMON
AC WIRING - GREEN COLORING EARTH GROUND
DC WIRING - BLUE COLORING +
DC WIRING - WHITE/BLUE COLORING -
ANALOG WIRING - CABLE SHIELDED
AC & DC NOT IN SAME RACEWAY

DETAIL NO. C-405 NTS	CITY OF CHANDLER STANDARD DETAIL	**SCADA CABINET**	APPROVED: CITY ENGINEER DATE: 01/09/09	DETAIL NO. C-405 PAGE 8 OF 12

ITEM	DESCRIPTION	MFG	CATALOG	QTY
1	PLASTIC WIRE DUCT	PANDUIT		
2	DIGITAL 16 INPUT/16OUTPUT BASE	MODICON Summit 602-267-1000	MODEL 170 ADM35010	1
2	I/O BUS ADAPTER	MODICON	MODEL 170 INT11000	1
2	ANALOG INPUT BASE	MODICON	Model 170AAI1400	1
2	PROCESOR WITH INTERBUS PORT	MODICON	Model 171CC576000	1
2	PROCESSOR OPTION ADATOR (REDUNDANT MB+)CLOCK	MODICON	Model 172PNN26022	1
2	I/O BUS ADAPTER CABLE	MODICON		1
3	STANDARD DIN RAIL 35 MM X 7.5 MM	ALLEN BRADLEY	199-DR1	1
4	MAG FLOWMETER CONVERTER PANEL MOUNT 120 VAC, 4-20 MA, HART, LCD DISPLAY FOR <16 INCH DETECTORMAG FLOW TUBE SEPARATE ELECTRONICS	Cadillac-AXIOM SOUTHWEST 480-834-7706	CMCRUXXFTFM 2AS Length in feet 3AE Length in ft	1
5	PROTOCOL CONVERTER HART TO MODBUS RTU W/CONFIGURATION SOFTWARE	ARCOM 1-913-549-1000	HT-DS-1	1
6	SELECTOR SW--3 POS MAINT, NEMA 4/13 30.5 MM, KNOB 1NO-1NC SCREW TERMINALS	SQUARE D	9001KS43BH13	1
7, 10, 12 & 25	RAISED DIN RAIL 35 MM X 7.5 MM	ALLEN BRADLEY BORDER 602-244-0331	1492-DR6	4
8	RADIO TRANSCIEVER LICENSED 800 TO 960 MHZ, 5 WATTS, -30 DEG C TO + 60 DEG.C	MDS Radio Border States Electric 602-244-0331	9710A	1
9	LEVEL RELAY PLUG-IN DRDT, 10KOHM, 120 VAC, 10 SEC W/ BASE	WARRICK	16DMB1A0-X-10-10	2
9	RELAY--ICE CUBE ICE CUBE 24 VDC COIL DPDT, 10 A CONTACTS W/NR51 BASE	SQUARE D	8501KP12V14	2
9	RELAY--ICE CUBE ICE CUBE 120 VAC COIL DPDT, 10 A CONTACTS W/NR51 BASE	SQUARE D	8501KP12V20	1
11	LIGHTNING PROTECTOR FLANGE MOUNT 1225-1000MHZ, F/F 220 PJ	POLYPHASER	IS-50NX-C2	1
13 & 16	TERMINAL BLOCK DOUBLE FEED--THROUGH BLUE, 24-12 AWG 32 A .25 INCH	PHOENIX CONTACT	UDK 4 BU	74
14	POWER SUPPLY TRACK MOUNTED 24VDC, 240W, 10A W/INTERNAL FUSING	IDEC	PSR5-G24	1
15	POWER SUPPLY TRACK MOUNTED 12VDC, 30W, 2.5A W/INTERNAL FUSING	IDEC	PSR5-C12	1
17	TERMINAL BLOCK DOUBLE FEED--THROUGH GRAY, 24-12 AWG 32 A .25 INCH	PHOENIX CONTACT	UDK 4	26
18	DUPLEX RECEPTACLE TRACK MOUNTED 120V, 15A	PHOENIX CONTACT	EM-DUO/120/15	2
19	BACKPANEL, PAINTED STEEL FOR F5 ENCLOSURE	HOFFMAN BrownWholeSale 602-275-8521	A60P36F1	1
20	ENCLOSURE, FREE STANDING, NEMA 12, PAINTED STEEL	HOFFMAN	A603624F5	1
21	LIGHTING PACKAGE, FLUORESCENT, 115 VAC .63 AMPS PROVIDE BULBS (NOT IN PACKAGE)	HOFFMAN	A-LFM16D18	1
22	DRIP SHIELD FOR NEMA 12, 4 NEMA 3R, 36 IN WIDE	HOFFMAN	ADK36A	1
23	AIR CONDITIONER SIDE PANEL MOUNT 115 VAC, 4000 BTU	HOFFMAN	M33-0416-6010	1
24	UPS PRO LINE 850 VA FOR 9 MINUTES 26 MINUTES AT HALF POWER	TRIPPLITE	BCPRO850	1
26	ELECTRONIC VALVE CONTROLLER AND SIGNAL RETRANSMISSION MODULES	CLA-VAL ESCO Phone # (602) 264-7946	131VC-1	1
27	10" PIPE DIAMETER WITH HEAVIER SPRING ELECTRIC VALVE	CLA-VAL ESCO Phone # (602) 264-7946	131G-37BY	1
28	LEVEL PROBE WIRE SUSPENDED STAINLESS STEEL W/PVC COATED WIRE	WARRICK	3W1	3

DETAIL NO.
C- 405
NTS

CITY OF CHANDLER STANDARD DETAIL

MATERIALS LIST 1 OF 2

APPROVED: _____ CITY ENGINEER
DATE: 01/08/09

DETAIL NO.
C- 405

ITEM	DESCRIPTION	MFG	CATALOG	QTY
29	PROBE FITTING, PIPE MOUNT, 2 IN , 3 PROBE, BRASS	WARRICK	3E-33	1
30	LOW PROFILE PEDESTALS	TESCO #(916) 395-8800	26-000 typeIIAF	1
31	TYPE T THERMOCOUPLE XMTR MINATURE SCALED 0 - 250 DEG F	AXIOM	AXT251-T-0-250F	1
32	1 POLE CIRCUIT BREAKER MINIATURE TRACK MOUNTED 16 A, B (FAST) CURVE MERLIN GERIN	SQUARE D	MG24118	1
33	LCD DISPLAY SCALEABLE FOR ENG UNITS INCHES AND FEET	AXIOM SOUTHWEST 480-814-7706	AX685	
34	WELL LEVEL TRANSDUCER .1% ACCURACY, HART DIGITAL PROTOCOL, RANGE 16.7 ' SPAN,CABLE LENGTH 20' WITH REMOTE DISPLAY	AXIOM SOUTHWEST 480-814-7706	CWLTY-0303-26-26 W-05-RNG16.7ft-02-1907-LEN20ft/CWD50-0325-2603	1
35	MAGMETER CADILLAC MAG FLOW TUBE 10', ANSI 150LB, 316SS, RUBBER	Cadillac-AXIOM SOUTHWEST 480-814-7706	Model CMAGIRCF150SDSFM	1
36	GAUGE MODEL 30 INWC/0/+100PSI	AXIOM SOUTHWEST 480-814-7706	Ax9831741-4	1
37	AIR RELIEF/VACUUM CHECK 2"	GOBLE SAMPSON 480-969-3667	MODEL# 144DAT.1-F2-16/57	1
38	PRESSURE TRANSMITTER WITH LOCAL DISPLAY TX -15 TO +285 PSI, CONFIGURATION, HART COMPATIBLE, 1/2" CONNECTION, LOOP POWERED 4 - 20 MA OUTPUT.	AXIOM SOUTHWEST 480-814-7706	CPLVY-0303-0213-Z-RNG(-15to+285psig)-02-1916-1326-22	1
39	BRASS CALIBRATION PORT¼ WITH CHECK AND CAP	RALSTON INDUSTRIES (800) 347-6575	#QTPT 2MBI	1
	COAXIAL CABLE --HELIAX 7/8 INCH W/CONNECTORS	ANDREW	LDF5-50	2
	MULTI-CONDUCTOR CABLE--BRAID SHIELDED CONTROL CABLE--18AWG--2 CONDUCTOR (19 X 30) 600V. -65 TO 200 DEG C	BELDEN	83321	9
	CABLE ASSEMBLY--CUSTOM--22AWG	GENERIC	RS323C	1
	RESISTOR 250 OHM, 1 WATT	GENERIC	RES-250	1
	PLUG NEMA 5-15P, 15A, 125 VAC	HUBBEL	HBL5266C	2
	BARE THERMOCOUPLE TYPE T 20 GA. 12" LONG PLUS 3' LEADS	OMEGA	BARE-20-T-12	1
	ANTENNA YAGI 890-960 MHZ W/ MOUNTING HARDWARE	SCALA	TY-900	1
	PANEL SUPPORT, STEEL	HOFFMAN	A60FSHDPS	1
	END BRACKET UNIVERSAL FOR 2 OR 3 LEVEL GRAY	PHOENIX CONTACT	E/UK 1	8
	FUSE TERMINAL BLOCK WITH SCREW CAP TRACK MOUNTED 250 VAC, 20 A FOR BUSSMAN GMC GLASS FUSES	PHOENIX CONTACT	UK 10-DREHSLA 250 (5 X 20)	4
	FUSE, GLASS 5 MM X 20 MM 250 VAC 3.15 AMP MEDIUM TIME DELAY	BUSSMAN	GMC 3.15A	
	END COVER UNIVERSAL GRAY	PHOENIX CONTACT	D-UDK 4	6
	TERMINAL BLOCK DOUBLE FEED--THROUGH GRN-YLW, 24-12 AWG, 32A GROUND TO RAIL .25 INCH	PHOENIX CONTACT	UDK 4-PE	8
	NAMEPLATE ENGRAVED PLASTIC BLACK W/ WHITE LETTERING 1 X 0.25 INCH, TEXT .1 IN TALL	GENERIC	NPGN1X.250LT	24
	NAMEPLATE ENGRAVED PLASTIC BLACK W/ WHITE LETTERING 3 X 1 INCH, TEXT .1 & .2 IN TALL	GENERIC	NPGN312LT	2
	NAMEPLATE ENGRAVED PLASTIC BLACK W/ WHITE LETTERING 3 X 1 INCH, TEXT .1, .2 , & .15 IN TALL	GENERIC	NPGN312L3PT	1
	NAMEPLATE ENGRAVED PLASTIC BLACK W/ WHITE LETTERING 3 X 1 INCH, TEXT .5 IN TALL	GENERIC	NPGN311L	1
	CUSTOM BRACKET PAINTED STEEL 18 GA DIMENSIONS AS SHOWN	GENERIC	BRKT-1	1
	METAL LEGS TO RAISE PANEL A MINIMUM OF 12" --MAXIMUM 24" ABOVE THE PAD	HOFFMAN	SEE OPTION	1 set

DETAIL NO.
C- 405
NTS

CITY OF CHANDLER STANDARD DETAIL

MATERIALS LIST 2 OF 2

APPROVED: _____ CITY ENGINEER
DATE: 01/09/09

DETAIL NO.
C- 405

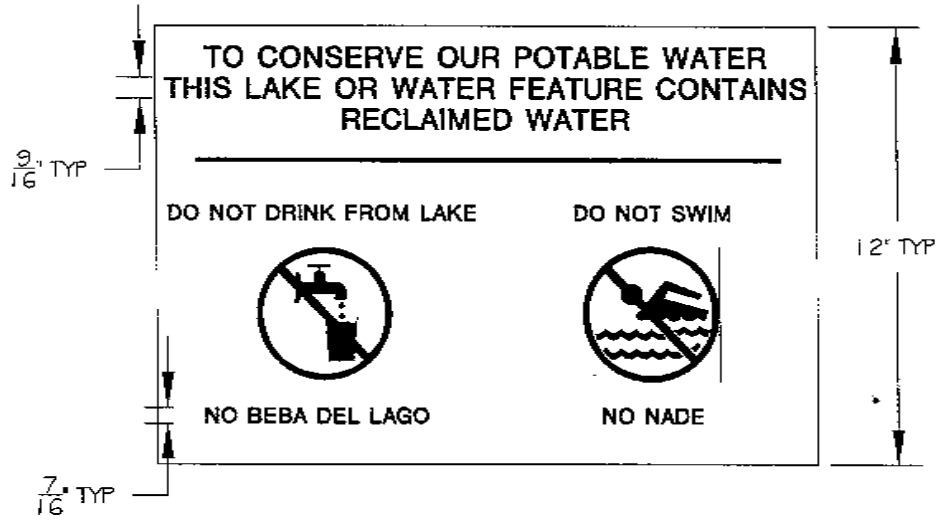

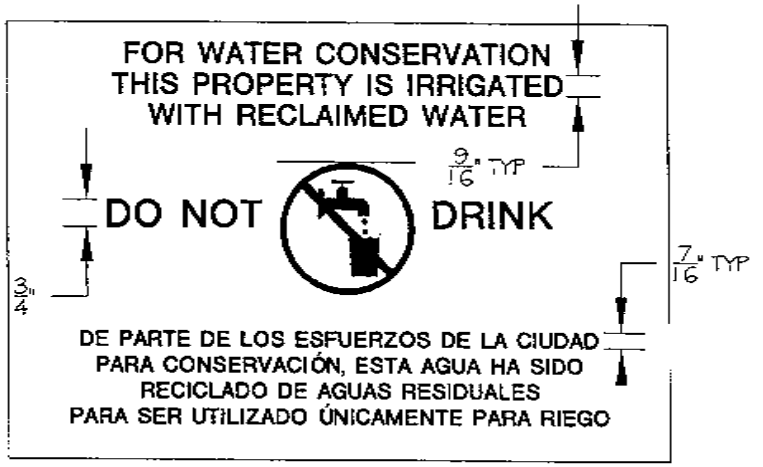

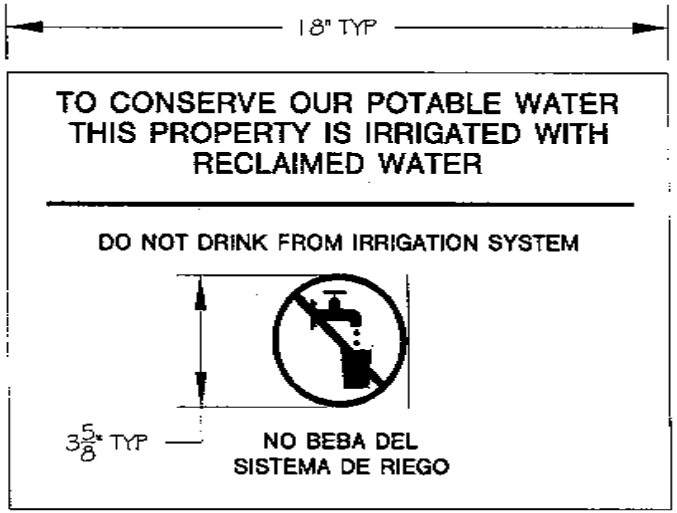

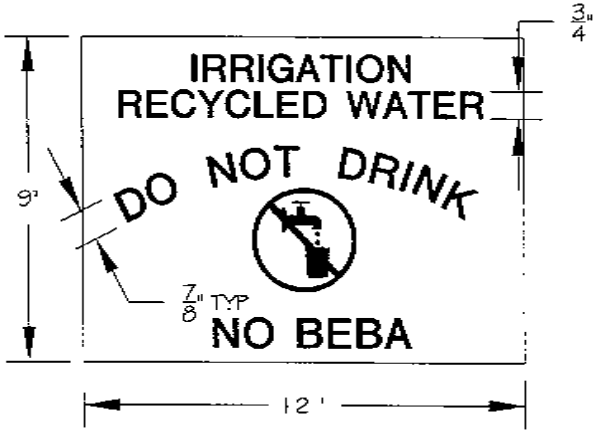

NOTES:

COLOR: COPY: WHITE
BACKGROUND: PURPLE (PANTONE 512)
SIGN PANEL: 1/8" ALUMINUM ALLOY 5052-H38 PER ASTM B 209
PROVIDE 3/8" BORDER BETWEEN PANEL AND BACKGROUND

DETAIL NO. C- 405 NTS	CITY OF CHANDLER STANDARD DETAIL	SIGNAGE	APPROVED: for CITY ENGINEER DATE: 11-30-09	DETAIL NO. C-405 PAGE 11 OF 12

ALL EQUIPMENT FURNISHED SHALL BE NEW AND OF CURRENT DESIGN. LIKE EQUIPMENT SHALL BE OF SAME MANUFACTURER.

THE CONTRACTOR SHALL PURCHASE LABOR, MATERIALS,, APPARATUS, APPLIANCES, AND INSTRUMENTATION FROM LOCAL ARIZONA-BASED, AUTHORIZED, FACTORY-TRAINED ENGINEERING REPRESENTATIVES, NOT JUST A STOCKING DISTRIBUTOR. THEY SHALL BE LOCATED WITHIN A 100-MILE RADIUS OF THE PROJECT AND HAVE BEEN IN THE VICINITY FOR A MINIMUM OF 5 YEARS.

DESCRIPTIVE DATA: SUBMIT COPIES OF COMPLETE DESCRIPTIVE LITERATURE, PERFORMANCE DATA, PHYSICAL DIMENSIONS, POWER AND SIGNAL CONNECTIONS FOR EACH COMPONENT AND EQUIPMENT TO BE FURNISHED. PROVIDE NAME OF MANUFACTURER, STYLE, AND COMPLETE MODEL NUMBER. LISTING ITEMS "AS SPECIFIED" WITHOUT BOTH MAKE AND MODEL OR TYPE DESIGNATION IS NOT ACCEPTABLE. SUBSTITUTIONS SHALL NOT BE ALLOWED WITHOUT PRIOR APPROVAL.

COMPONENT DATA SHEETS: SUBMIT A COMPONENT DATA SHEET FOR EACH PIECE OF INSTRUMENTATION EQUIPMENT SIMILAR TO AN ISA S20 FORM. INCLUDE EQUIPMENT TAG NUMBER, MANUFACTURER'S MODEL NUMBER, LOCATION OF SERVICE, MATERIALS OF CONSTRUCTION, SIZE AND SCALE RANGE, CALIBRATED RANGE, SET POINTS, OPTIONAL ACCESSORIES AND ANY OTHER USEFUL INFORMATION.

CONTROL SYSTEM DRAWINGS: SUBMIT 11" X 17" DETAILED SHOP DRAWINGS INDICATING DIMENSIONS, COMPONENT LAYOUT, MOUNTING DETAILS, WIRING DIAGRAMS, NAMEPLATE LEGENDS AND BILL OF MATERIALS FOR EACH CONTROL PANEL.

WIRING DIAGRAMS SHALL INCLUDE ALL INTERCONNECTIONS, INTER-WIRING AND TERMINALS BETWEEN ALL ELECTRICAL AND/OR INSTRUMENTATION UNITS. WIRE NUMBERS SHALL BE CONTINUOUS FROM START TO FINISH. WIRE NUMBERS SHALL NOT CHANGE WHEN GOING FROM ONE UNIT, CABINET, ENCLOSURE, TERMINAL OR ANY DEVICE TO ANOTHER.

THE SPECIFICATIONS REFERENCE KNOWN STANDARDS AND CODES. EACH SUCH STANDARD REFERENCED SHALL BE CONSIDERED A PART OF THE SPECIFICATIONS TO THE SAME EXTENT AS IF REPRODUCED THEREIN IN FULL. THE FOLLOWING IS A REPRESENTATIVE LIST OF SUCH ASSOCIATIONS, INSTITUTES AND SOCIETIES, TOGETHER WITH THE ACRONYM BY WHICH EACH IS IDENTIFIED:

AIEE	AMERICAN INSTITUTE OF ELECTRICAL ENGINEERS	NEC	NATIONAL ELECTRICAL CODE
ANSI	AMERICAN NATIONAL STANDARDS INSTITUTE	NEMA	NATIONAL ELECTRICAL MANUFACTURER'S ASSOCIATION
ASTM	AMERICAN SOCIETY FOR TESTING AND MATERIALS	NETA	NATIONAL ELECTRICAL TESTING ASSOCIATION
ICEA	INSULATED CABLE ENGINEERS ASSOCIATION	NFPA	NATIONAL FIRE PROTECTION ASSOCIATION
IEEE	INSTITUTE OF ELECTRICAL AND ELECTRONIC ENGINEERS	UL	UNDERWRITER'S LABORATORIES, INC.

EVERY REFERENCE IN THE SPECIFICATIONS SHALL MEAN THE LATEST PRINTED EDITION OF EACH IN EFFECT AT THE CONTRACT DATE OR LATEST EDITION AS ADOPTED BY THE LOCAL GOVERNING AUTHORITY.

SYSTEM RESPONSIBILITY INCLUDES BUT IS NOT NECESSARILY LIMITED TO FURNISHING SYSTEM COMPONENTS, SYSTEM INTEGRATION AND DESIGN, WIRING DIAGRAMS, INSTALLATION SUPERVISION, FIELD INSTRUMENT CALIBRATION, STARTUP, TESTING AND OPERATOR TRAINING. THE I&C CONTRACTOR SHALL COORDINATE WITH THE CITY AND THE PROGRAMMER FOR IMPLEMENTING AND TESTING THE PLC PROGRAMS PRIOR TO THE RTU DELIVERY TO THE SITE.

THE I&C CONTRACTOR SHALL BE A REPUTABLE SYSTEM INTEGRATOR AND BE AN UNDERWRITERS LABORATORY (UL) 508A RECOGNIZED PANEL FABRICATOR. THE I & C CONTRACTOR AND PROGRAMMER MUST BE SEPARATE SUBCONTRACTORS TO THE ELECTRICAL CONTRACTOR. THE I&C CONTRACTOR AND THE ELECTRICAL CONTRACTOR SHALL BE LOCATED WITHIN A 100-MILE RADIUS OF THE PROJECT AND HAVE BEEN IN THAT VICINITY FOR A MINIMUM OF FIVE (5) YEARS. THE I&C CONTRACTOR AND THE ELECTRICAL CONTRACTOR CANNOT BE ONE AND THE SAME.

PROGRAMMER SHALL PROVIDE FULL DOCUMENTATION--BOTH PAPER DOCUMENT OF PROCESS DESCRIPTIONS WITH PAGE NUMBERS AND INDEX AND IN-SOFTWARE NETWORKS, CONTACTS, COILS, AND REGISTERS WITH DESCRIPTIONS AT ALL POINTS. THE PROGRAMMING LANGUAGE SHALL BE PROWORX NXT.

THE TURNOUT STRUCTURE MUST BE CAPABLE OF RECEIVING A MINIMUM OF 2,000 GPM THROUGH THE RECEIVING BOX BELOW THE AIR GAP WITHOUT OVERFLOWING.

DETAIL NO. C- 405 NTS	CITY OF CHANDLER STANDARD DETAIL	**GENERAL NOTES**	APPROVED: CITY ENGINEER DATE: 01/06/09	DETAIL NO. C-405 PAGE 12 OF 12

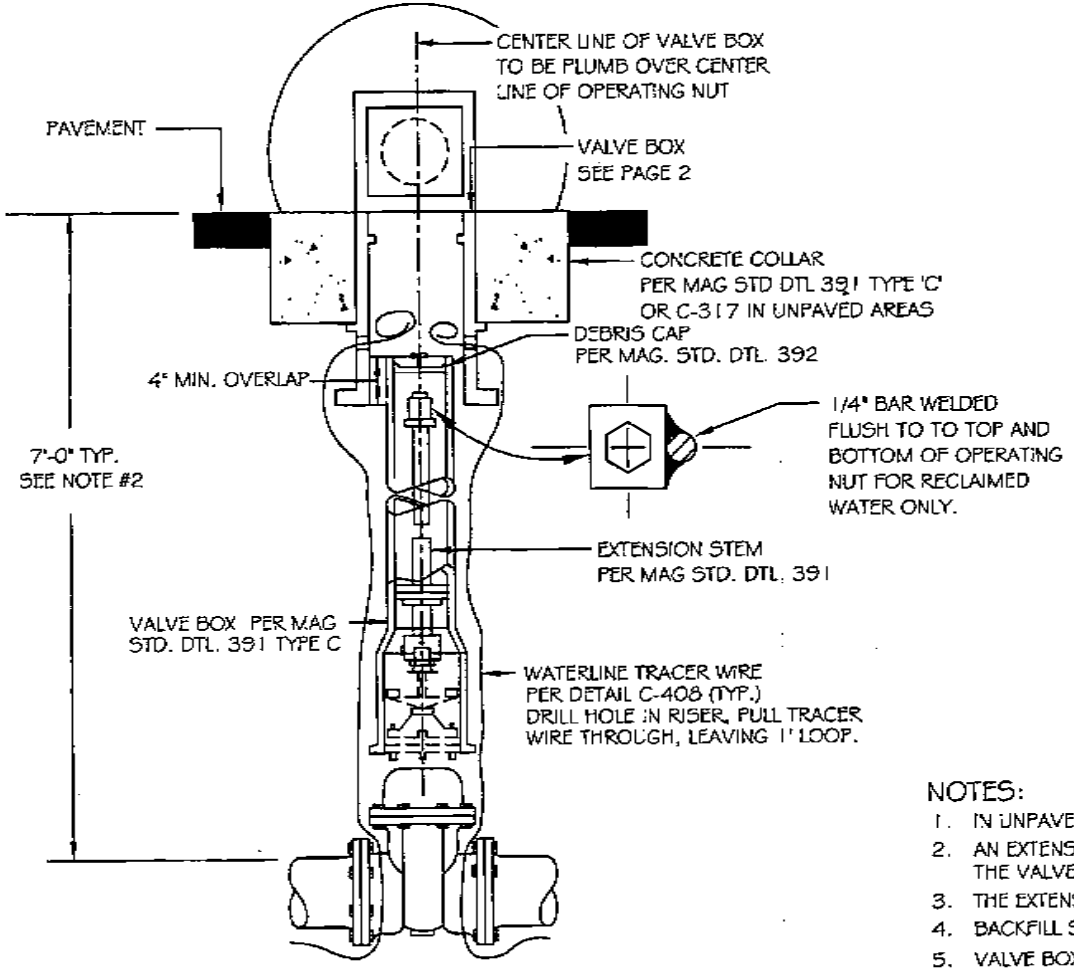

NOTES:

1. IN UNPAVED AREAS, CONCRETE COLLAR SHALL CONFORM TO DETAIL C-317.
2. AN EXTENSION SHAFT PER MAG. STD. DTL. 391 SHALL BE PROVIDED WHERE THE VALVE OPERATING NUT IS MORE THAN 4'-0" BELOW FINISH GRADE.
3. THE EXTENSION 2" OPERATOR SHALL BE FIRMLY TIGHTENED TO THE VALVE NUT.
4. BACKFILL SHALL BE 1/2 SACK CLSM. PER MAG. SPECIFICATION 718.
5. VALVE BOXES SHALL NOT BE INSTALLED WITHIN CONCRETE GUTTER, SIDEWALK, RAMPS OR VALLEY GUTTER.

DETAIL NO. C- 406 PAGE 1 OF 2	CITY OF CHANDLER STANDARD DETAIL	**VALVE BOX INSTALLATION (RECLAIMED WATER)**	APPROVED: _____ CITY ENGINEER DATE: 01/08/09	DETAIL NO. C- 406 PAGE 1 OF 2

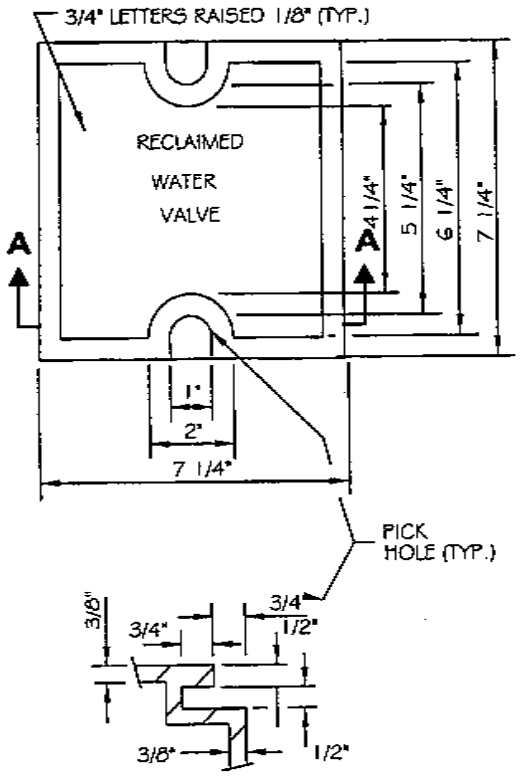

SECTION

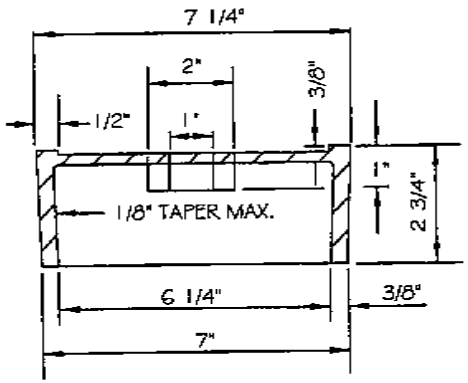

SECTION A - A
COVER

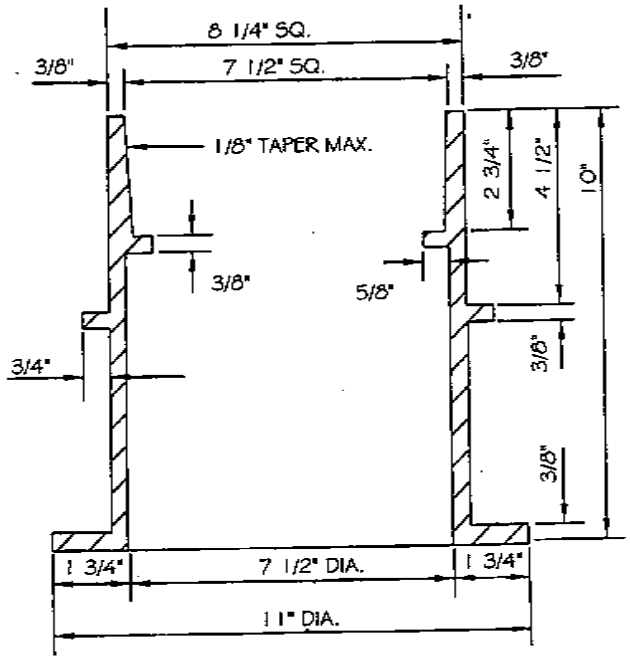

SECTION
VALVE BOX

NOTES:

1. ALL MATERIAL SHALL BE CAST IRON PER ASTM. A-48, CLASS 30 B.
2. THE SURFACES OF THE COVER AND BOX WHICH COME IN CONTACT WITH EACH OTHER MUST BE SMOOTH AND FREE OF ALL CASTING RIDGES AND BURRS TO PROVIDE A SNUG FIT.
3. THE VALVE BOX SHALL HAVE A ROUND BOTTOM TO ACCOMMODATE RISER PIPE. THE TOP OF THE VALVE BOX SHALL BE SQUARE.
4. THE LID AND INSIDE AND OUTSIDE OF THE RISER PIPE SHALL BE COLORED PURPLE. COLOR MAY BE INCORPORATED INTO PIPE DURING MANUFACTURE OR PAINTED ONTO PIPE SURFACE. WHEN PAINTED THE PAINT SHALL BE SEYMOUR SAFETY PURPLE.
5. LETTERING SHALL BE RESTRICTED TO THAT SHOWN ON THE VALVE BOX COVER.

DETAIL NO. C- 406	CITY OF CHANDLER STANDARD DETAIL	**VALVE BOX INSTALLATION (RECLAIMED WATER)**	APPROVED: CITY ENGINEER DATE: 11-19-99	DETAIL NO. C- 406 PAGE 2 OF 2

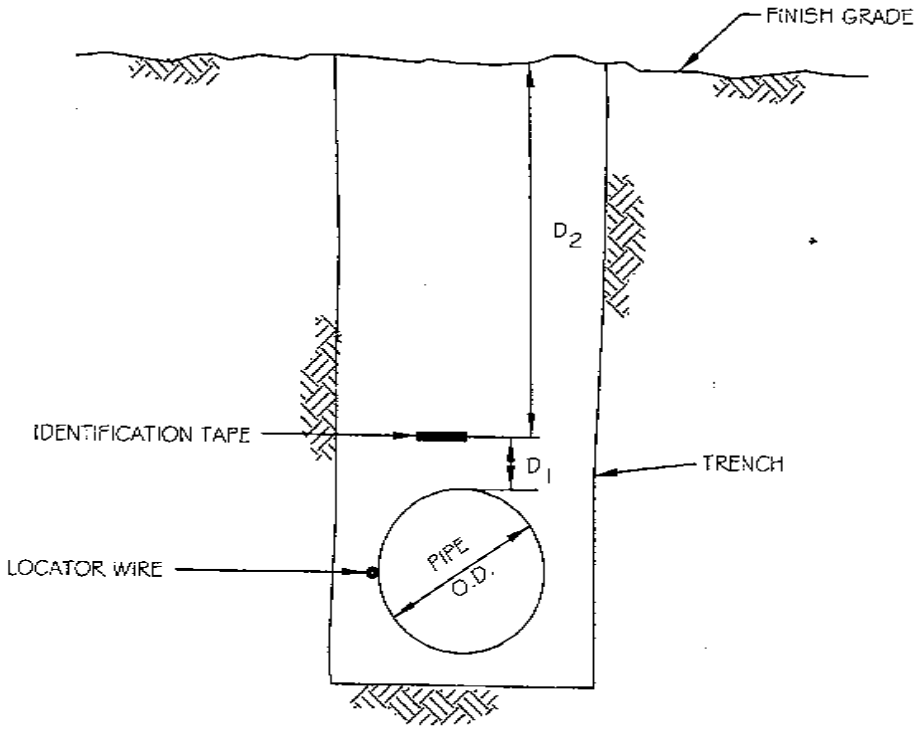

NOTES:

1. I.D. TAPE AND LOCATOR WIRE SHALL BE INSTALLED ON PUBLIC DISTRIBUTION AND COLLECTION MAINS FOR ALL PIPE MATERIALS AND SIZES 4" AND LARGER
2. I.D. TAPE AND MARKINGS SHALL BE PER MAG STD. SPEC. SEC. 616.4, EXCEPT AS MODIFIED HEREON.
3. LOCATOR WIRE SHALL BE 14 GAUGE THWN COPPER WIRE.
4. D_1 SHALL BE 12", HOWEVER, ADJUST D_1, AS NECESSARY, SO THAT D IS NEVER GREATER THAN 48".
5. LOCATOR WIRE SHALL ORIGINATE/ TERMINATE AT VALVE BOXES AND MANHOLES AND BE SECURED TO VALVE BOX OR MANHOLE NO MORE THAN 12" BELOW COVER.
6. LOCATOR WIRE SHALL BE VERIFIED FOR ELECTRICAL CONTINUITY ALONG THE ENTIRE LENGTH.

IDENTIFICATION TAPE COLOR AND MARKING SCHEDULE

PIPELINE USE	COLOR	PRINTED MESSAGE
RECLAIMED WATER	MAG SPEC SEC 616.4	MAG SPEC SEC 616.4
POTABLE WATER	SOLID COLUMBIA BLUE	CAUTION POTABLE WATER LINE
SEWER	GREEN	CAUTION: SANITARY SEWER

C-408	CITY OF CHANDLER STANDARD DETAIL	**PIPE LOCATOR WIRE & I.D. TAPE**	APPROVED: CITY ENGINEER DATE: 01-27-11	DETAIL NO. **C-408** NTS

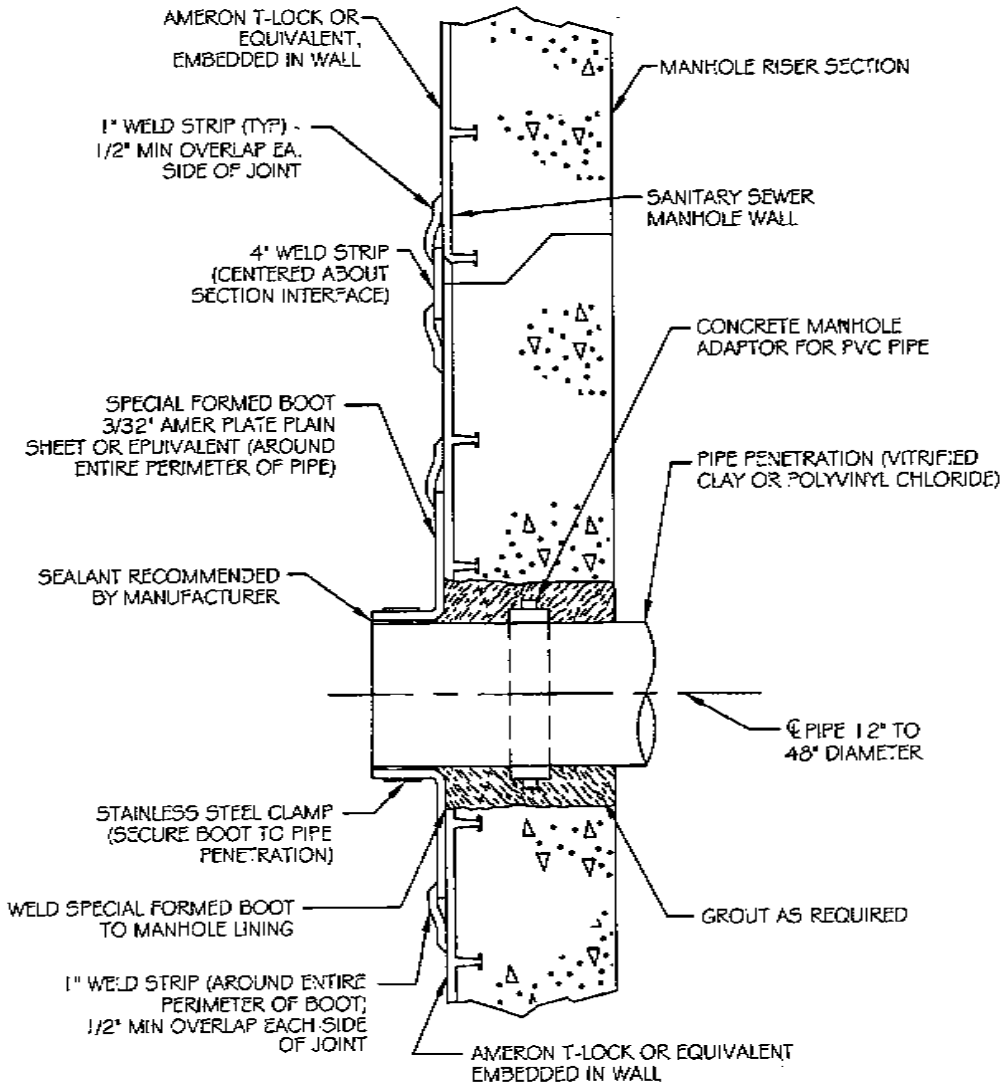

PIPE PENETRATION DETAIL

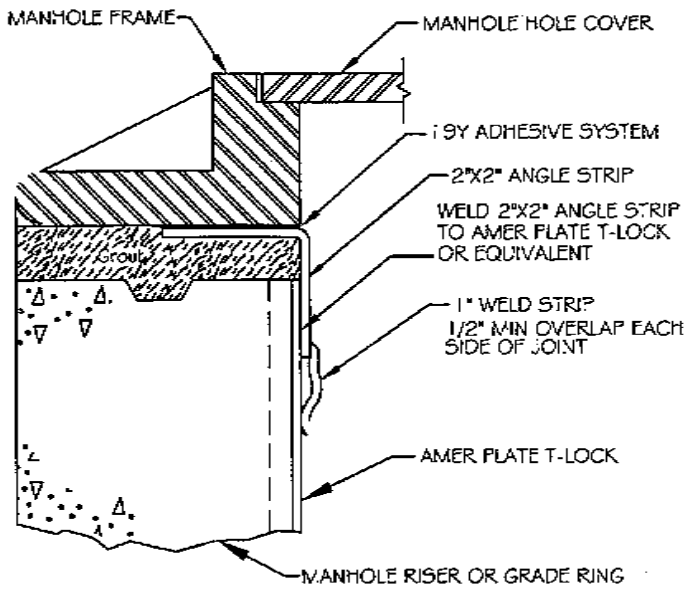

NOTE:
2" X 2" ANGLE STRIP TO BE ATTACHED TO MANHOLE FRAME USING I 9Y ADHESIVE PRIOR TO SETTING FRAME.

MANHOLE FRAME TERMINATION DETAIL

NOTE:
ALL FIELD JOINTS FOR T-LOCK LINED MANHOLE SECTIONS SHALL BE TYPE P-1 JOINTS WITH 4" WELD STRIP WITH 2-1" WELD STRIPS SECURING THE JOINT STRIP IN PLACE.

DETAIL NO. C-409 NTS	CITY OF CHANDLER STANDARD DETAIL	**PIPE PENETRATION AND MANHOLE FRAME TERMINATION DETAIL**	APPROVED: CITY ENGINEER DATE: 01/08/09	DETAIL NO. C-409 NTS

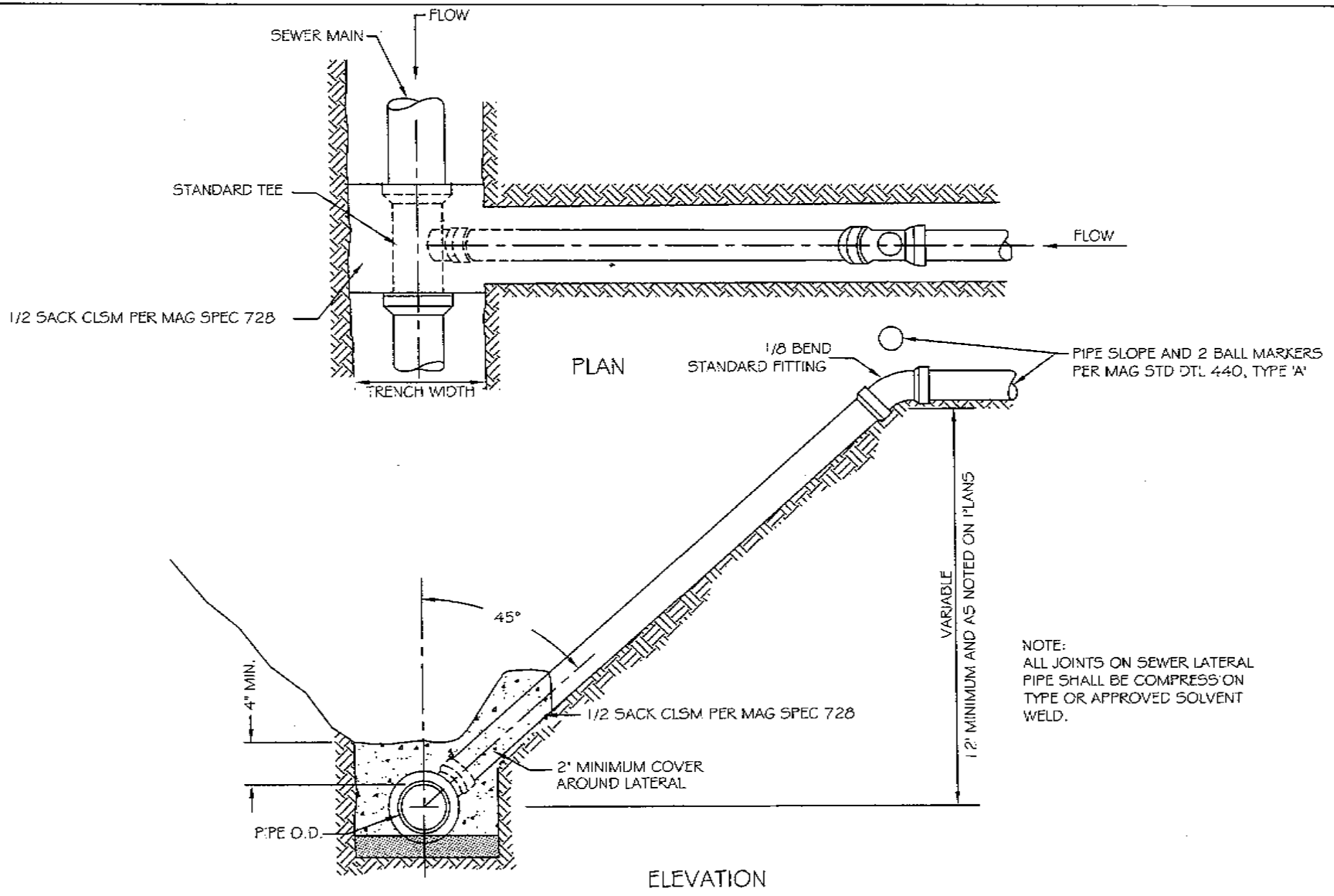

DETAIL NO. C-410 NTS	CITY OF CHANDLER STANDARD DETAIL	**DEEP CUT SEWER CONNECTION (SEWER LATERAL)**	APPROVED: CITY ENGINEER DATE: 01/14/10	DETAIL NO. C-410 NTS

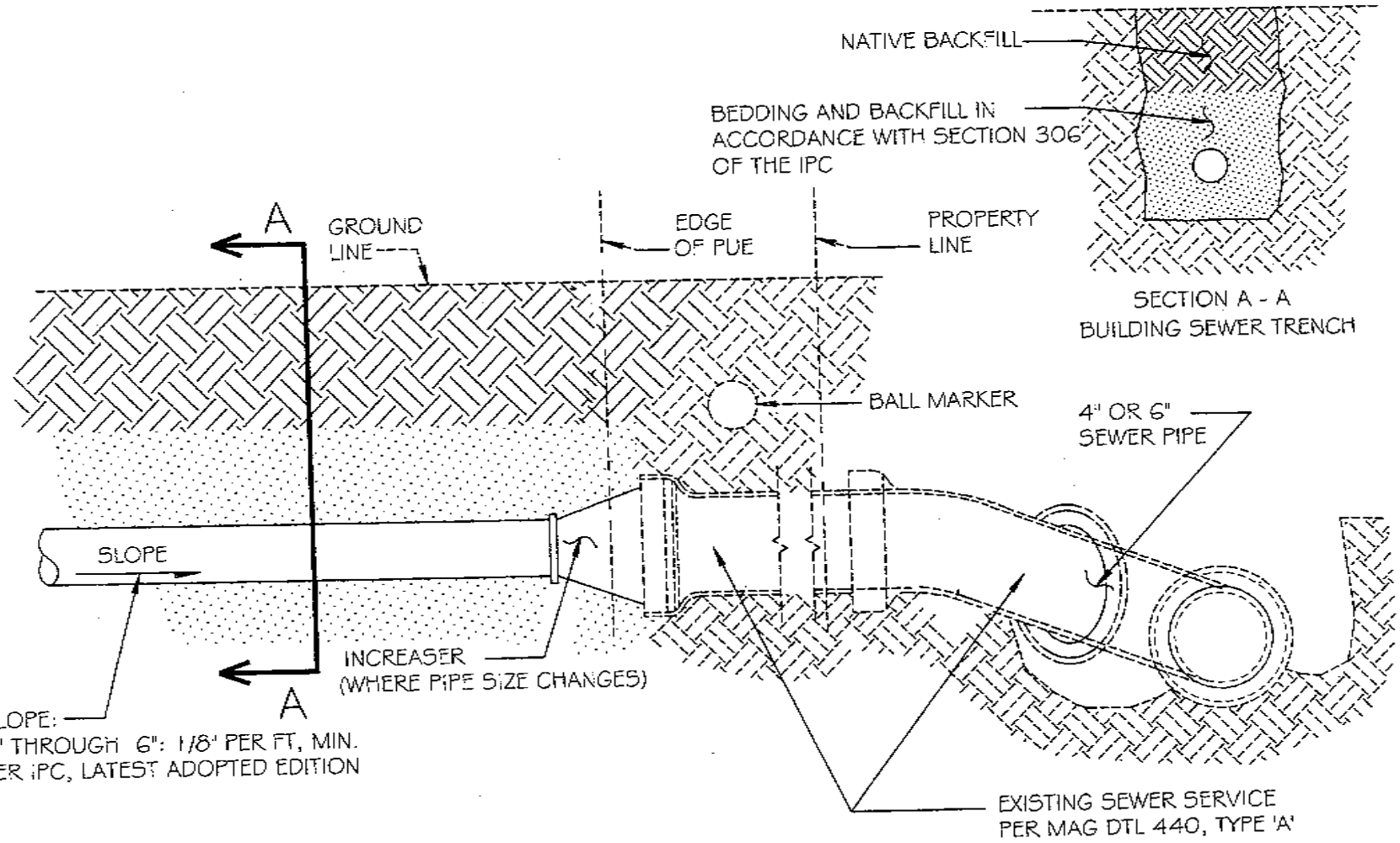

NOTES:

1. ALL CONSTRUCTION SHALL BE IN ACCORDANCE WITH THE INTERNATIONAL PLUMBING CODE (IPC), LATEST ADOPTED EDITION.
2. NO PIPE SHALL BE BACKFILLED UNTIL THE LINE HAS BEEN INSPECTED AND APPROVED BY THE DEVELOPMENT INSPECTOR.

DETAIL NO. C-411 NTS	CITY OF CHANDLER STANDARD DETAIL	**BUILDING SEWER CONNECTION**	APPROVED: _____ CITY ENGINEER DATE: 01/14/10	DETAIL NO. C-411 NTS

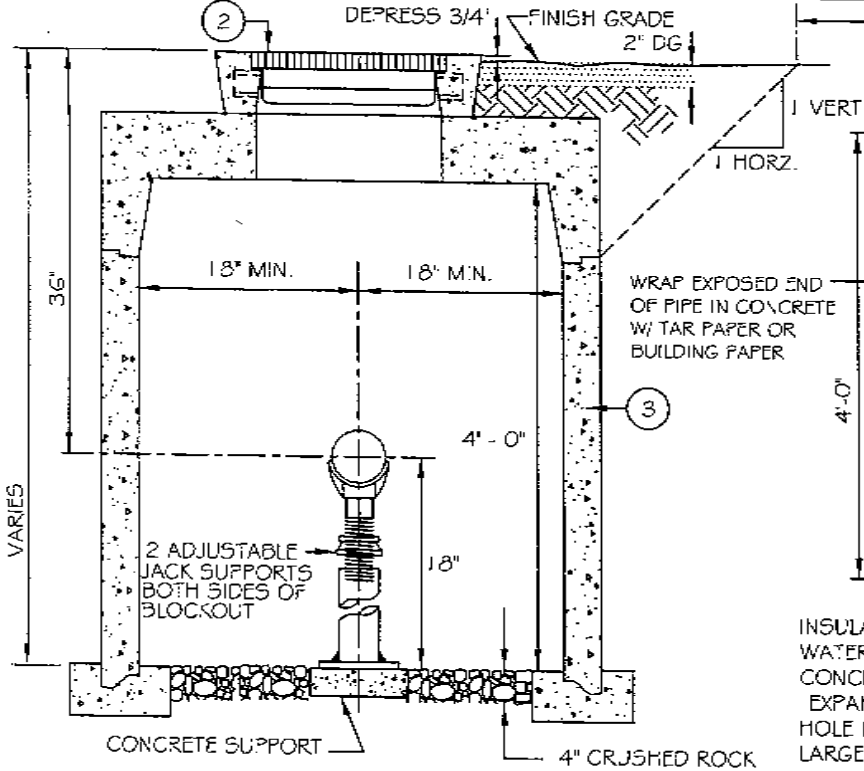

SECTION A-A

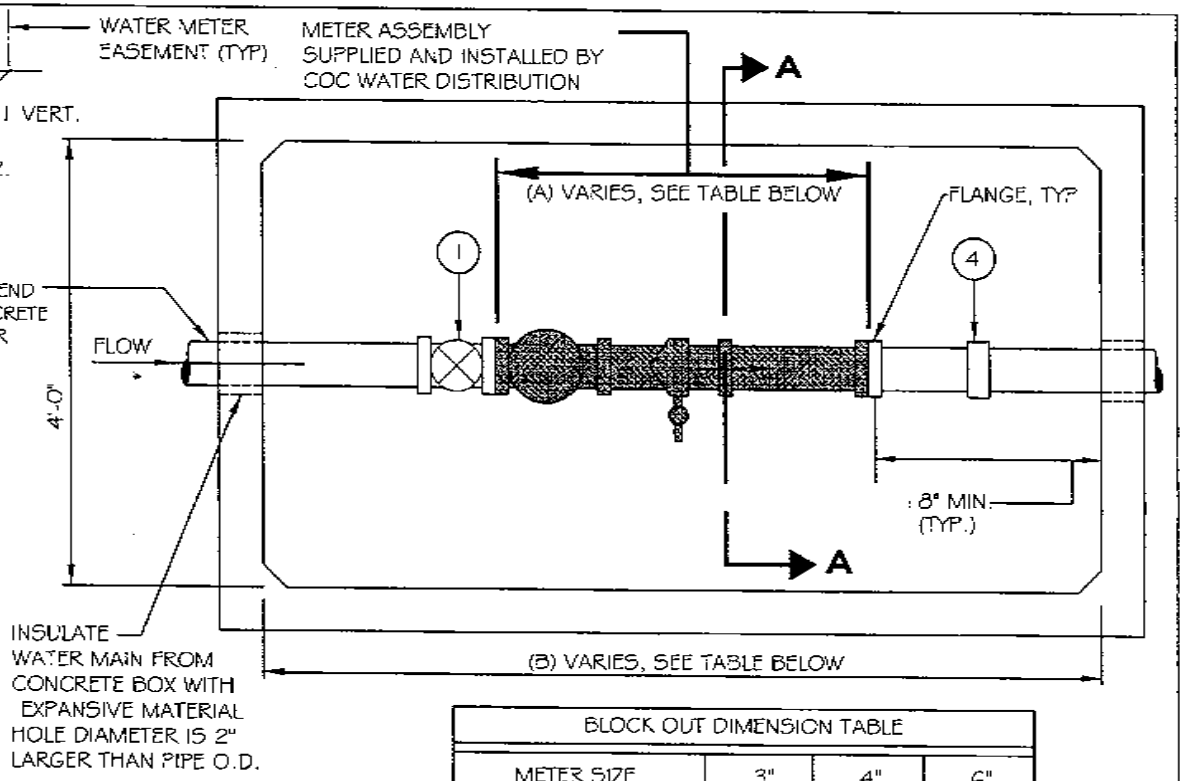

BLOCK OUT DIMENSION TABLE			
METER SIZE	3"	4"	6"
METER ASSEMBLY (A) BLOCK OUT	1'- 6-3/4"	1'- 10-1/4"	2'- 3-3/4"
VAULT LENGTH (B)	4' - 8"	5' - 0"	5' - 6"

NOTES:

1. METER VAULTS MAY BE EITHER CAST-IN-PLACE OR PRE-CAST CONCRETE. SEE MAG STANDARD DETAIL 321 FOR VAULT CONSTRUCTION.
2. STAINLESS BOLTS AND NUTS REQUIRED FOR ENTIRE ASSEMBLY.
3. PIPE MAIN SHALL BE FULLY RESTRAINED BEYOND INLET AND OUTLET OF VAULT.
4. CONTRACTOR SHALL PROVIDE FLANGED SPOOL IN METER ASSEMBLY BLOCK-OUT TO PROVE CORRECT ALIGNMENT. SPOOL MAY BE SALVAGED AFTER METER INSTALLATION.
5. VAULT LID SHALL NOT BE INSTALLED UNTIL AFTER METER IS INSTALLED BY CITY. CALL (480) 782-3700.
6. CONTRACTOR SHALL DRILL 1-3/4" DIAMETER HOLE IN CENTER OF HATCH.

LEGEND:

1. O.S. & Y. GATE VALVE, FLANGED WITH HAND WHEEL OPEN LEFT, AND RISING STEM.
2. METER HATCH PER SYRACUSE CASTINGS "CH-AL" STYLE PEDESTRIAN RATED ALUMINUM WITH SLAM LOCK OR APPROVED EQUAL. CH-5AL 42" X 42"
3. METER VAULT PER UTILITY VAULT COC STANDARD DETAIL OR APPROVED EQUAL.
4. PROVIDE 1" TO 1-1/2" OF PLAY IN THE FLEX COUPLING - CAULDER OR EQUAL.

DETAIL NO. C-416 NTS	CITY OF CHANDLER STANDARD DETAIL	3" THROUGH 6" RECLAIMED WATER METER VAULT	APPROVED: CITY ENGINEER DATE: 01-27-11	DETAIL NO. C-416 NTS

STORM SEWER & DRAINAGE SERIES

C-500 TO C-509

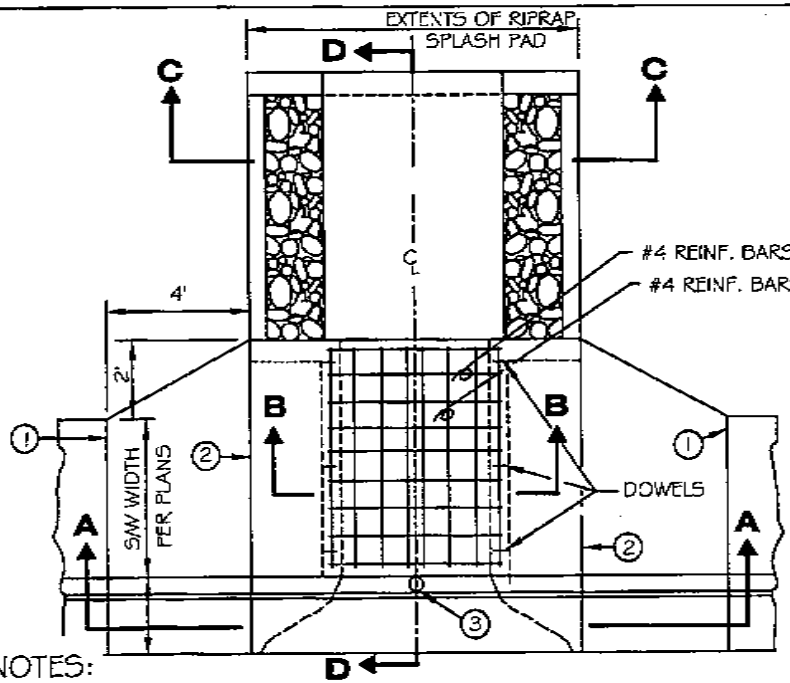

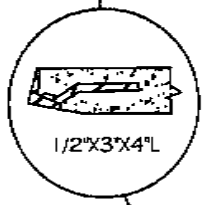

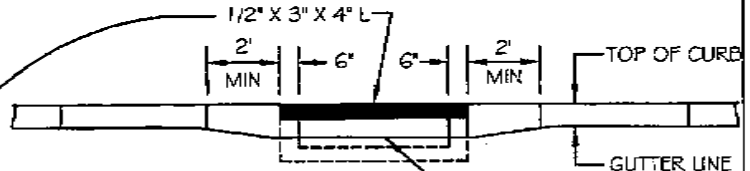

SECTION A-A

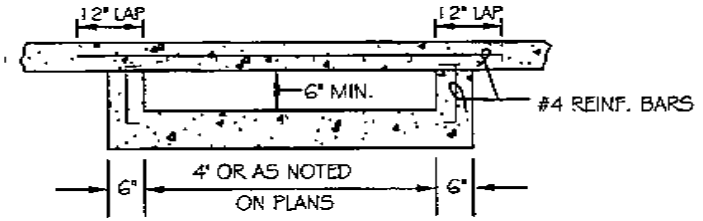

SECTION B-B

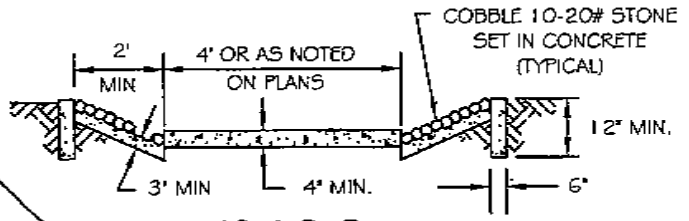

SECTION C-C

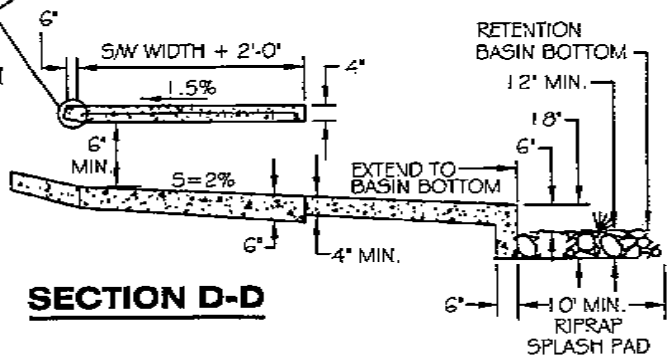

SECTION D-D

NOTES:

1. FULL DEPTH EXPANSION JOINT EXTENDED THROUGH CURB AND GUTTER (TYP.). EXPANSION JOINT FILLER SHALL BE 1/2" BITUMINOUS PRE FORMED EXPANSION JOINT FILLER ASTM D-1751. (FULL DEPTH).
2. CONTRACTION JOINT.
3. STORM DRAIN INLET MARKER PER C-508.
4. FOR OPENINGS GREATER THAN 4 FT., SEPARATE CHAMBERS WILL BE CONSTRUCTED IN 4 FT. INCREMENTS WITH A CONTRACTION JOINT OVER EACH INTERIOR SUPPORT.
5. STEEL MAT TO BE SUPPORTED ON CHAIRS PRIOR TO CONCRETE PLACEMENT. MINIMUM CONCRETE COVER TO BE 1" OVER REINFORCING BAR.
6. EXPOSED ANGLE IRON TO BE PAINTED WITH ONE SHOP COAT OF NO. 1-D PAINT AND TWO FIELD COATS OF NO. 10 PAINT AS PER MAG SECT. 790.
7. 6" - 12" COBBLE TO BE USED FOR SPLASH PAD.
8. TOP SHALL BE MONOLITHIC INCLUDING 4' WINGS.
9. CONCRETE SHALL BE CLASS 'A' PER MAG SECTION 725

DETAIL NO. C-500 NTS	CITY OF CHANDLER STANDARD DETAIL	SCUPPER	APPROVED: CITY ENGINEER DATE: 01/06/09	DETAIL NO. C-500 NTS

8'x8'x6" MAG CLASS B CONCRETE PAD REQUIRED IN DG-LANDSCAPED AREAS. SEVEN #3 BARS 12" C TO C EACH WAY. SLOPE DOWN FROM GRATE TO DG SURFACE 1½".

1. MODIFIED FLAT-BOTTOM MANHOLE CONE. MORTAR TO C.I. RING
2. MIN. 30" DIA. BOLTED C.I. RING AND GRATE.
3. MIN. 30" DIA. BOLTED C.I. RING AND COVER WITH THE RAISED LETTERS 'STORMWATER ONLY'.
4. GRADED PARKWAY, OR A.C. PAVING.
5. COMPACTED ABC IN PAVED AREAS.
6. DEBRIS SHIELD: ROLLED 16 GA. x 24" LENGTH W/ VENTED ANTI-SIPHON AND INTERNAL 0.265" MAX. SWO FLATTENED EXPANDED STEEL SCREEN x 12" LENGTH, FUSION-BONDED EPOXY.
7. PRECAST CONCRETE LINER, 4000 PSI 48" ID, 54" OD.
8. MIN. 6' DIA. DRILLED SHAFT.
9. SUPPORT BRACKET (TYP), FORMED 12 GA. STEEL FUSION BONDED EPOXY COATED
10. 6" DIA. SCHEDULE 40 PVC OVERFLOW PIPE.
11. 6" DIA. CORRUGATED HDPE PER MAG SECT. 738 INJECTION PIPE. NO PERFORATIONS BELOW SETTLING CHAMBER.
12. 4" THICK PERVIOUS CONCRETE SLAB CONFORMING TO MAG SECT. 725 MODIFIED: 6 SACK/CY PORTLAND CEMENT; MAX. WATER/CEMENT RATIO 0.3; COARSE AGGREGATE ONLY ASTM C-33 SIZE #8, WASHED; NO FINES; CONSOLIDATE BY STRIKING, NOT VIBRATION.
13. 3/8" TO 1-1/2" WASHED ROCK
14. DRAINAGE SCREEN: SCH. 40 PVC C.12" SLOTTED WELL SCREEN 32 SLOTS PER ROW/FT.
15. MIN. 4' DRILLED SHAFT.
16. FABRIC SEAL, UV RESISTANT GEOTEXTILE. COVER GRATE UNTIL UNTIL PAVING AND/OR LANDSCAPING IS COMPLETE.
17. 4" DIA. SCH. 40 PVC CONNECTOR PIPE W/ VENTED ANTI-SIPHON INTAKE & FLOW REGULATOR.
18. MIN. 4 QUART CAPACITY ABSORBENT.
19. 1 SACK ABC SLURRY EXCEPT IN LANDSCAPED INSTALLATIONS WITH NO PIPE CONNECTIONS.
20. 8 PERFORATIONS PER LINEAR FOOT FOR BOTTOM 3 FEET OF INJECTION CHAMBER.
21. 6 MIL PLASTIC LINER WATER STOP
22. INTAKE SCREEN, SCH 40 PVC 0.12" MODIFIED SLOTTED WELL SCREEN WITH 32 SLOTS PER ROW/FT. 48" OVERALL LENGTH WITH TRI-C END CAP

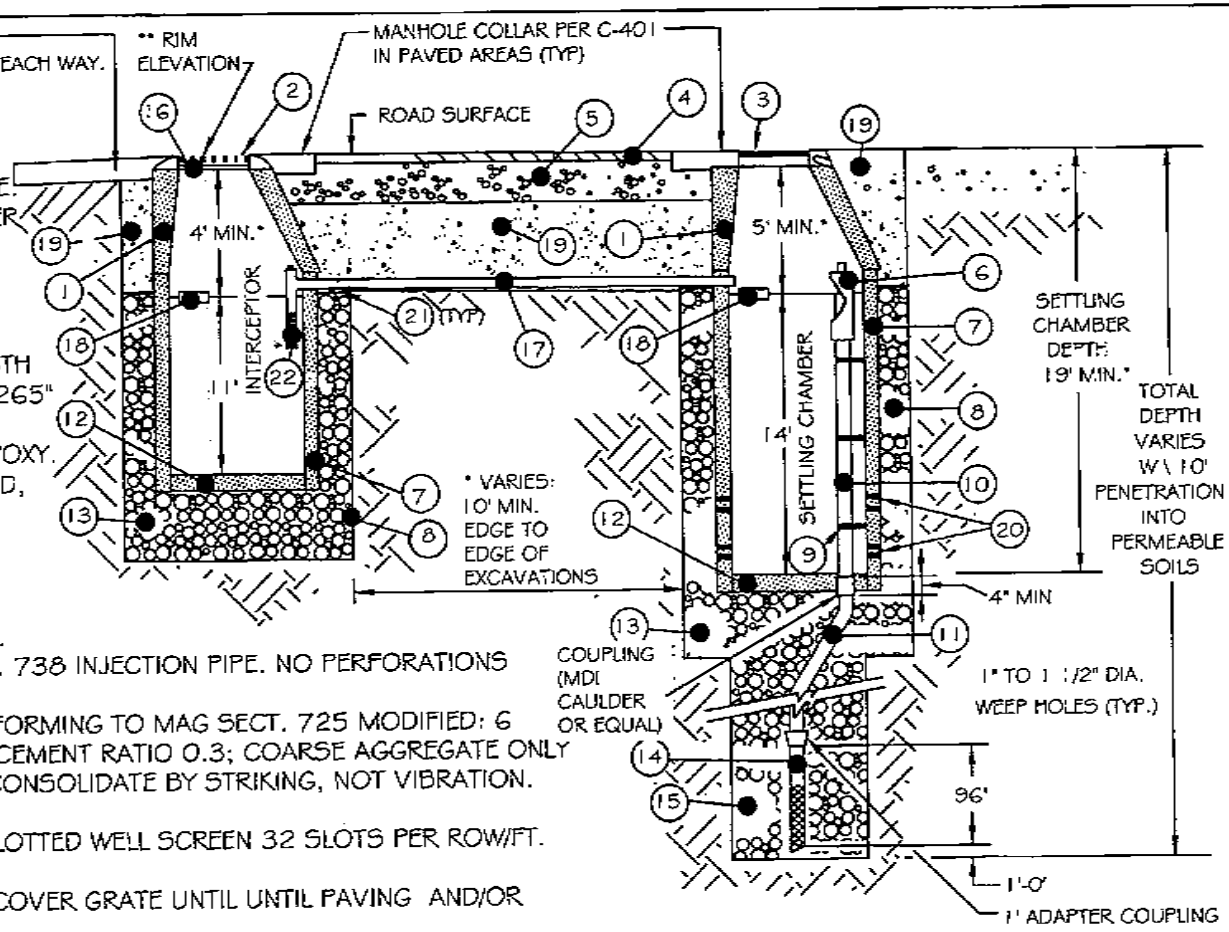

* NOTE - OVERFLOW DEPTHS AND INVERT OF CONNECTOR PIPE MUST BE BELOW THE INVERTS OF ALL UPSTREAM STORM DRAIN PIPE.

** NOTE - RIM ELEVATION SHALL BE FLUSH TO ROAD SURFACE OR TURF. RIM ELEVATION SHALL BE 1½" ABOVE DECOMPOSED GRANITE (DG) LANDSCAPED AREAS.

BASED UPON 'MAXWELL PLUS' BY TORRENT RESOURCES

DETAIL NO. C-501 NTS	CITY OF CHANDLER STANDARD DETAIL	**DRY WELL SYSTEM DETAIL AND SPECIFICATIONS**	APPROVED: _____ CITY ENGINEER DATE: 01/08/09	DETAIL NO. C-501 NTS

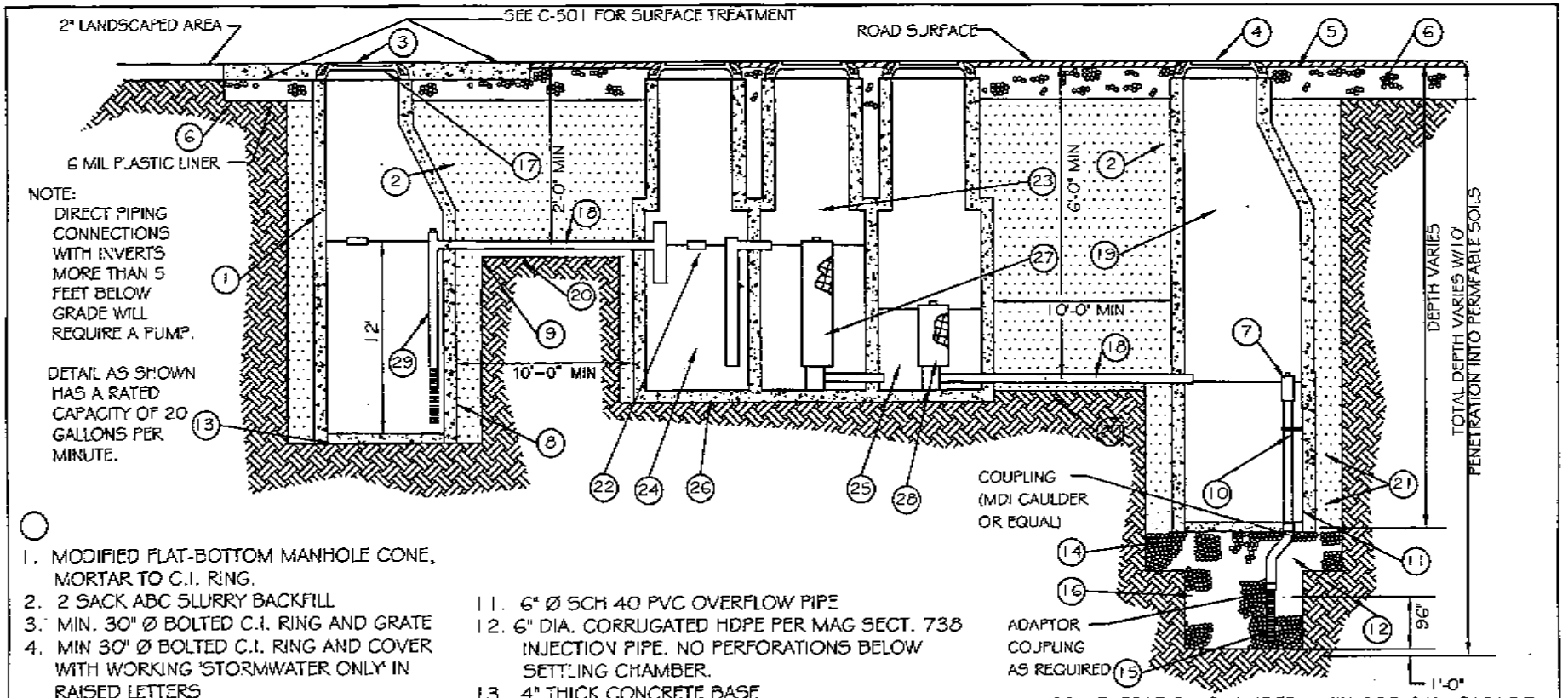

1. MODIFIED FLAT-BOTTOM MANHOLE CONE, MORTAR TO C.I. RING.
2. 2 SACK ABC SLURRY BACKFILL
3. MIN. 30" Ø BOLTED C.I. RING AND GRATE
4. MIN 30" Ø BOLTED C.I. RING AND COVER WITH WORKING 'STORMWATER ONLY' IN RAISED LETTERS
5. GRADED BASIN OR PAVING
6. COMPACTED ABC IN PAVED AREAS
7. DEBRIS SHIELD: ROLLED 16 GA. x 24" LENGTH W/ VENTED ANTI-SIPHON AND INTERNAL 0.265" MAX. SWO FLATTENED EXPANDED STEEL SCREEN x 12" LENGTH, FUSION-BONDED EPOXY.
8. PRECAST CONCRETE LINER, 4000 PSI 48" ID, 54" OD
9. MIN 6" DRILLED SHAFT
10. SUPPORT BRACKET, FORMED 12 GA. STEEL. FUSION BONDED EPOXY COATED STEEL.
11. 6" Ø SCH 40 PVC OVERFLOW PIPE
12. 6" DIA. CORRUGATED HDPE PER MAG SECT. 738 INJECTION PIPE. NO PERFORATIONS BELOW SETTLING CHAMBER.
13. 4" THICK CONCRETE BASE
14. 3/8" TO 1 1/2" WASHED ROCK
15. DRAINAGE SCREEN: SCH. 40 PVC 0.12" SLOTTED WELL SCREEN 32 SLOTS PER ROW/FT.
16. MIN 4' Ø DRILLED SHAFT
17. FABRIC SEAL, UV RESISTANT GEOTEXTILE. COVER GRATE UNTIL PAVING AND/OR LANDSCAPING IS COMPLETE.
18. 4" Ø SCH. 40 PVC CONNECTOR PIPE
19. (NOT USED)
20. SLURRY BACKFILL
21. (NOT USED)
22. ABSORBENT - HYDROPHOBIC IMBIBER PILLOW, MIN. 128 OZ. CAPACITY
23. FILTRATION CHAMBER - MIN 833 GAL. CAPACITY
24. PRIMARY SEPARATOR CHAMBER - MIN 833 GAL. CAPACITY
25. IMBIBATION CHAMBER - MIN 833 GAL. CAPACITY
26. TREATMENT INTERCEPTOR - MIN 2500 GAL TOTAL CAPACITY
27. SILT FILTER (2 EACH) - MIN 3600 S.I. POLYPROPYLENE FABRIC MESH
28. PUREFLO II ASSEMBLY (2 EACH) - HYDROPHOBIC IMBIBER BEAD DRAIN FIELD
29. OVERFLOW PIPE - 4" Ø SCH 40 PVC WITH ANTI-SIPHON VENT, FLOW REGULATOR AND SCREEN.

BASED UPON 'ENVIBRO 20' BY TORRENT RESOURCES

DETAIL NO. C-502 NTS	CITY OF CHANDLER STANDARD DETAIL	**PRETREATMENT DRYWELL SYSTEM**	APPROVED: CITY ENGINEER DATE: 01/08/09	DETAIL NO. C-502 NTS

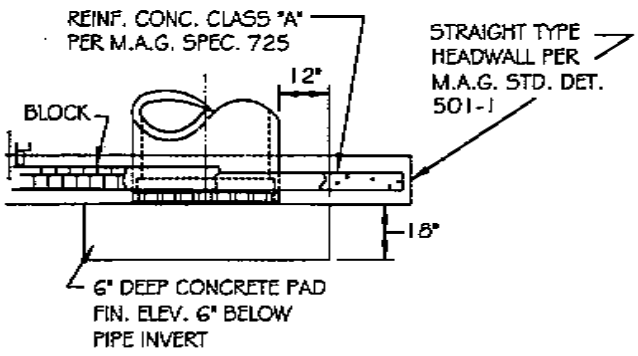

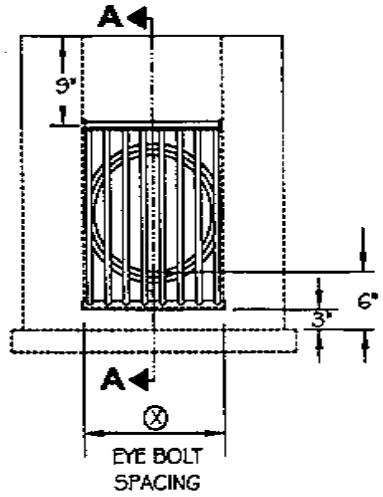

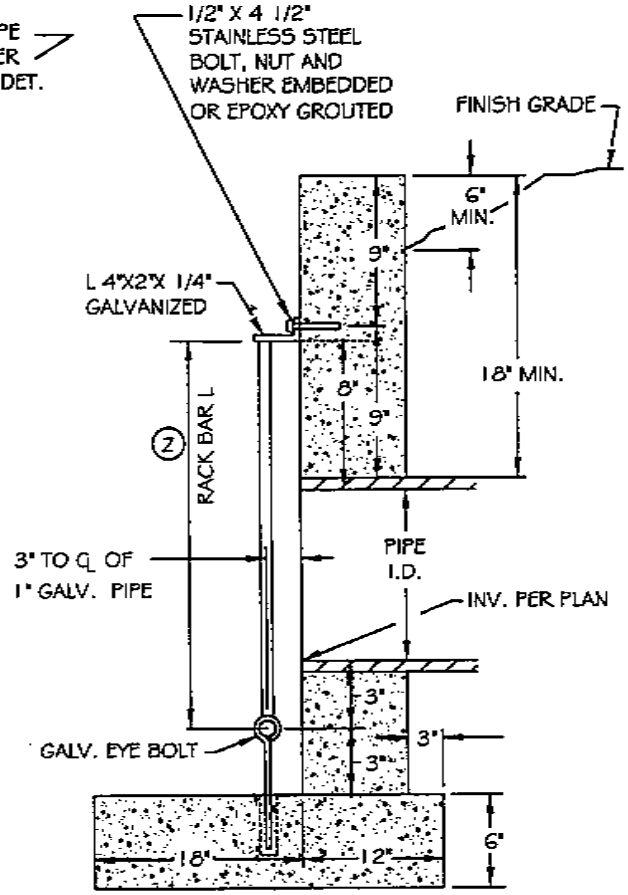

SECTION A-A

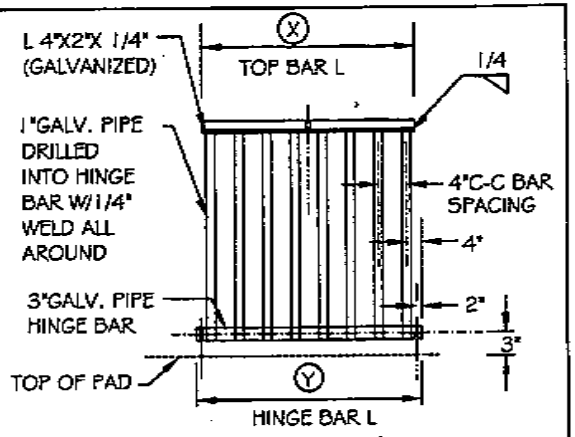

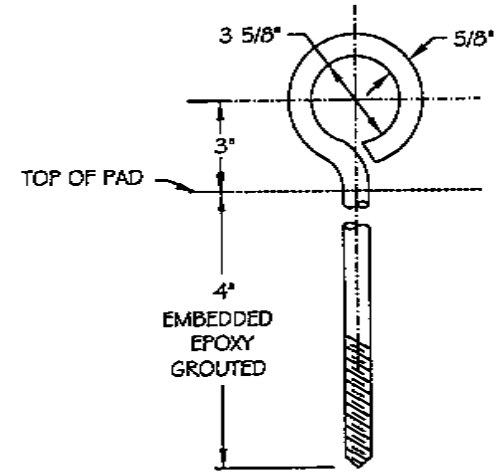

EYE BOLT

TYPICAL DIMENSIONS					
TYPE	PIPE DIA.	NO. OF BARS (I.D./4"+ 1")	DIMENSIONS X	Y	Z
A	15"	5	21"	25"	26"
	18"	6	25"	29"	29"

* ROUND UP TO NEXT FULL NUMBER

	OTHER BAR SIZES
DIMENSIONS	X = (# BARS X 4") + 1"
	Y = X + 4"
	Z = I.D.+ 3"+ 8" (UP TO 4' 0)

NOTES:
1. THIS DETAIL IS APPLICABLE AT ALL OPEN ENDS OF PIPE 12" OR MORE IN DIAMETER.
2. COAT ALL WELD AREAS WITH ZINC RICH PAINT.
3. DESIGN ENGINEER TO PROVIDE DETAILS FOR PIPE I.D.'S GREATER THAN 4' IN DIAMETER.

DETAIL NO. C-503 NTS	CITY OF CHANDLER STANDARD DETAIL	TRASH RACK/ACCESS BARRIER	APPROVED: CITY ENGINEER DATE: 11-19-99	DETAIL NO. C-503 NTS

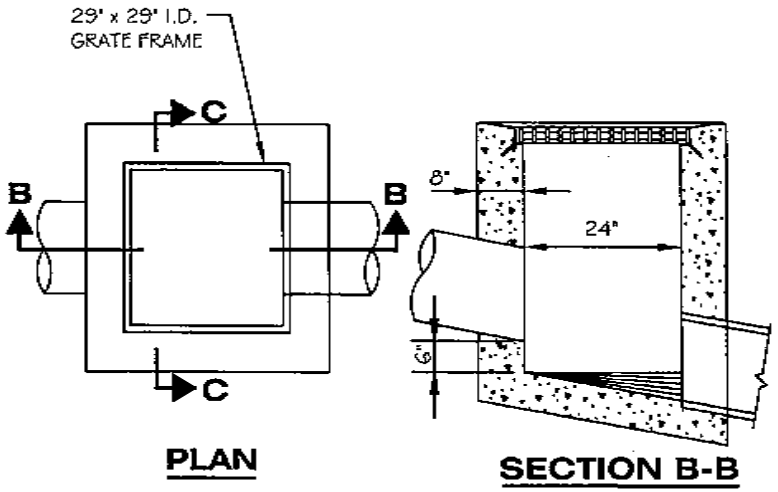

PLAN

SECTION B-B

SINGLE GRATE

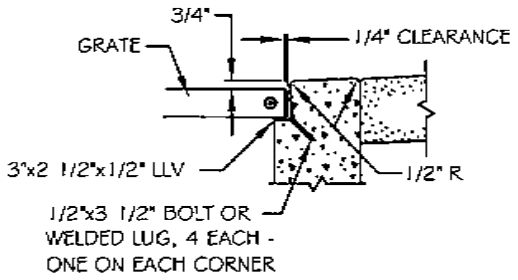

DETAIL OF ANGLE FRAME GRATE SUPPORT

ALL CONCRETE SHALL BE CLASS 'A' PER MAG SECT. 725. EXPOSED EDGES SHALL BE FINISHED WITH A 1/2" RADIUS. REINFORCE WITH #4 AT 8" EACH WAY, CENTERED.

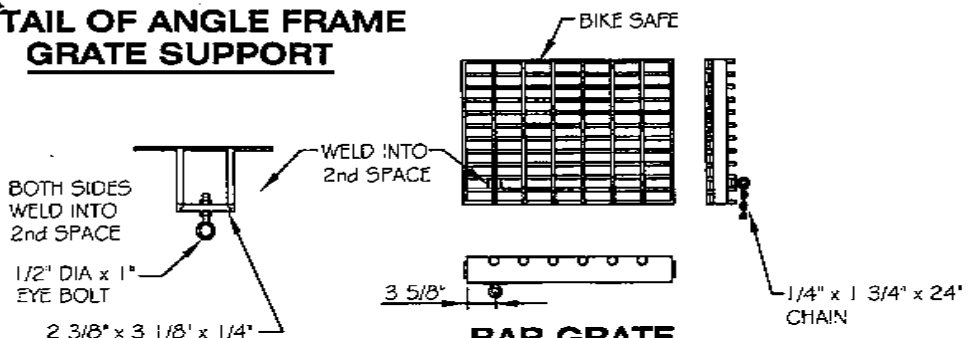

BAR GRATE

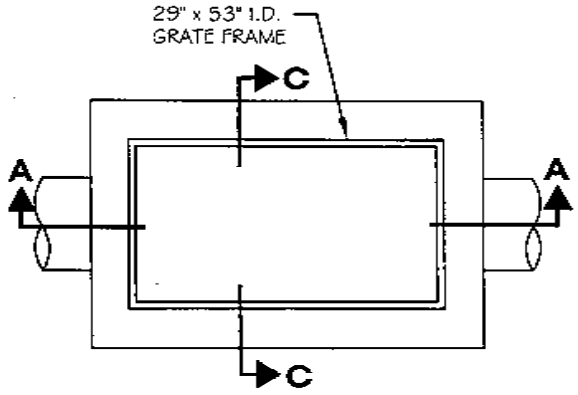

PLAN

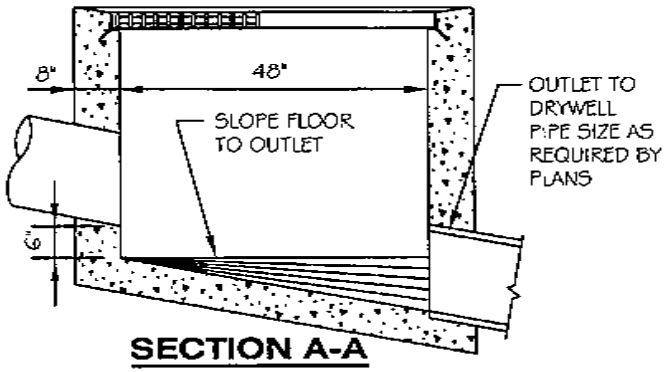

SECTION A-A

DOUBLE GRATE

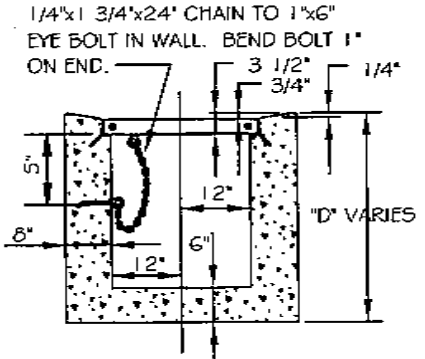

SECTION C-C

DETAIL NO. C-504 NTS	CITY OF CHANDLER STANDARD DETAIL	RETENTION BASIN INLET	APPROVED Elizabeth W. Hamm CITY ENGINEER DATE: January 11, 2002	DETAIL NO. C-504 NTS

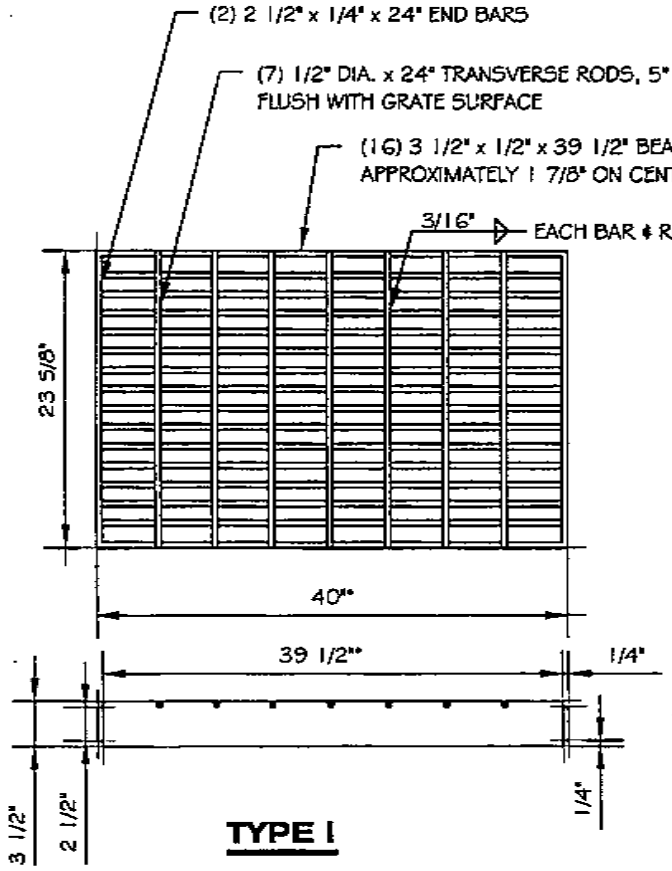

TYPE I

* DIMENSION WILL VARY DEPENDING UPON CATCH BASIN PIPE SIZE.

NOTES:

1. ALL STEEL SHALL BE IN ACCORDANCE WITH ASTM A-36.
2. WELDING SHALL BE IN ACCORDANCE WITH AWS SPECIFICATIONS.
3. FRAME AND GRATE SHALL BE TESTED FOR ACCURACY OF FIT AND SHALL BE MARKED IN SETS BEFORE DELIVERY.
4. THE COMPLETED ASSEMBLY SHALL BE GIVEN ONE SHOP COAT OF NO. 1 PAINT AND TWO FIELD COATS OF NO. 10 PAINT AS PER MAG SECTION 790.
5. THE GRATE SHALL BE FABRICATED TO WITHIN 1/8" OF SPECIFIED DIMENSIONS.

DETAIL NO. C-506 NTS	CITY OF CHANDLER STANDARD DETAIL	**CATCH BASIN GRATES**	APPROVED: Bruce D. Dethlefsen CITY ENGINEER DATE: 11-19-99	DETAIL NO. C-506 NTS

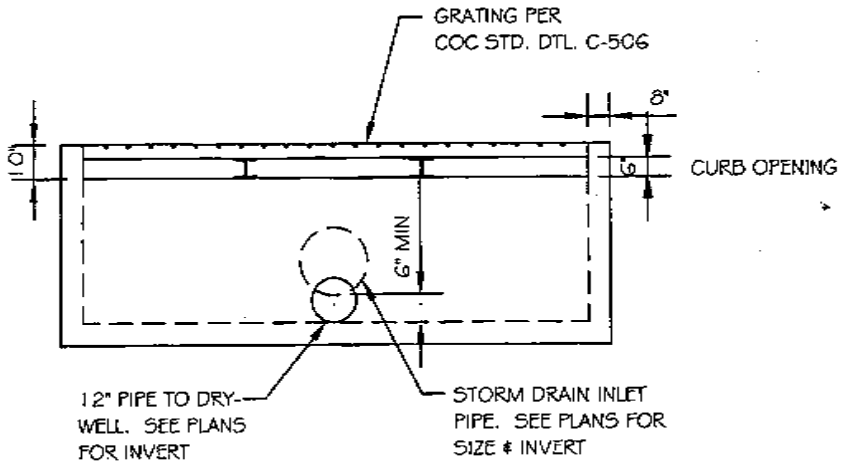

FRONT ELEVATION

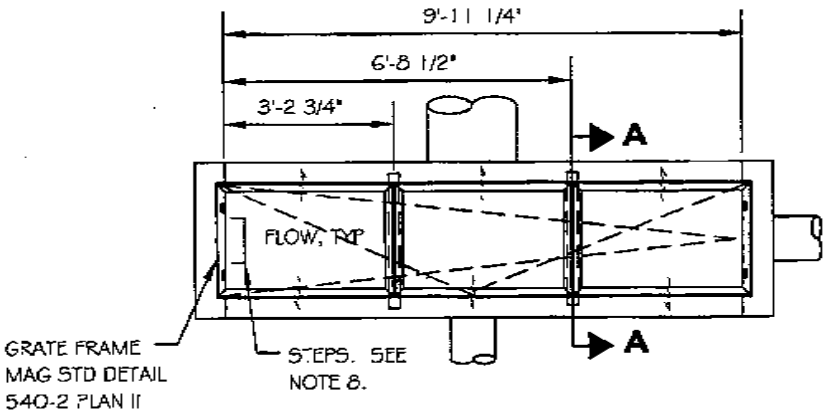

TRIPLE CATCH BASIN

NOTES:

1. ALL CONCRETE SHALL BE M.A.G. CLASS 'A'.
2. CONNECTOR PIPES MAY BE PLACED IN ANY WALL AS PER PLAN.
3. FLOOR BASIN SHALL BE TROWELLED TO A HARD, SMOOTH SURFACE AND SHALL SLOPE FROM ALL DIRECTIONS TO OUTLET.
4. CONNECTOR PIPE SHALL BE TRIMMED TO THE FINAL SHAPE AND LENGTH BEFORE CONCRETE IS POURED.
5. PLANS SHOULD SPECIFY GRATE ELEVATION AND INVERT ELEVATION.
6. RETENTION BASIN INLET MAY BE PREFABRICATED PROVIDING A SHOP DRAWING IS APPROVED BY THE ENGINEER PRIOR TO FABRICATION.
7. THE FRAME SHALL BE MAG STD DETAIL 540-2, PLAN II, GRATE PER CHANDLER DET. #C-506.

DETAIL NO. C-507 NTS	CITY OF CHANDLER STANDARD DETAIL	**BELOW GRADE RETENTION BASIN INLET (BUBBLER BOX)**	APPROVED: CITY ENGINEER DATE: 01/08/09	DETAIL NO. C-507 PAGE 1 OF 3

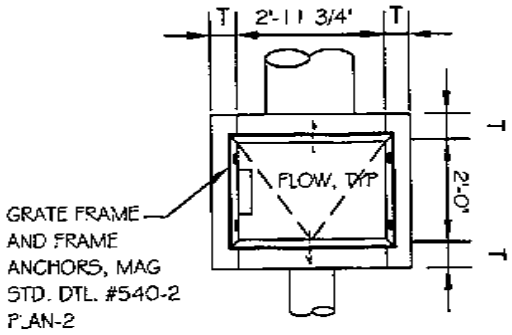

SINGLE CATCH BASIN

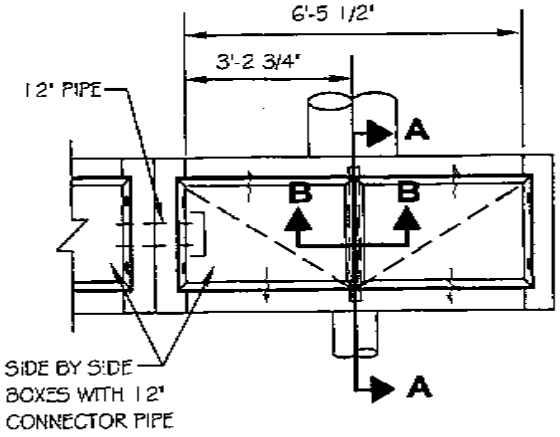

DOUBLE CATCH BASIN

NOTES: (CON'T)

8. STEPS (MAG DET. 428 POLYPROPYLENE) V = 3' (INCL) PLACE ONE STEP 12" ABOVE THE FLOOR OF THE BASIN. V OVER 3', PLACE STEPS AT 12" INTERVALS FROM THE FLOOR OF THE BASIN WITH THE TOP STEP AT 12" (MIN) BELOW THE TOP OF GRATE.
9. ALL EXPOSED METAL HARDWARE SHALL BE GIVEN ONE SHOP COAT OF NO. 1 PAINT AND 2 FIELD COATS OF NO. 10 PAINT AS PER M.A.G. SECTION 790.
10. ALL METAL UNITS SHALL BE FABRICATED FROM STRUCTURAL STEEL EXCEPT AS NOTED. STRUCTURAL STEEL SHALL BE IN ACCORDANCE WITH ASTM A-36.
11. WELDING SHALL BE IN ACCORDANCE WITH MAG WELDING SPECIFICATIONS.

DETAIL NO. C-507 NTS	CITY OF CHANDLER STANDARD DETAIL	BELOW GRADE RETENTION BASIN INLET (BUBBLER BOX)	APPROVED: CITY ENGINEER DATE: 01/09/09	DETAIL NO. C-507 PAGE 2 OF 3

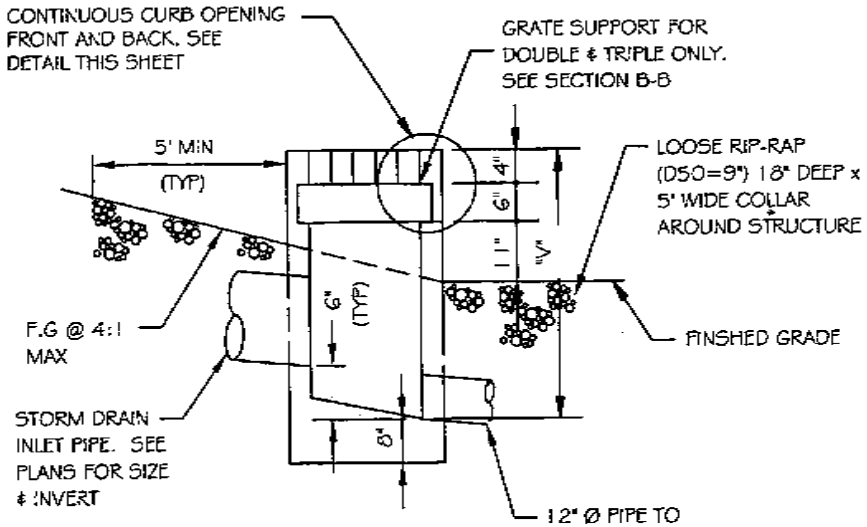

SECTION A-A

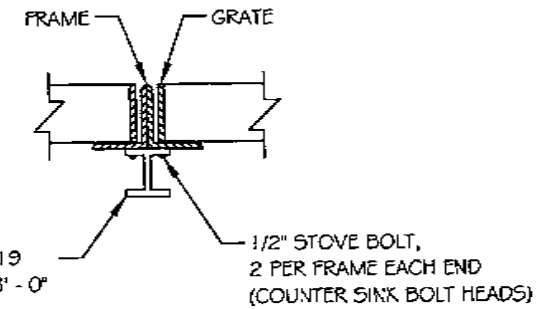

SECTION B-B

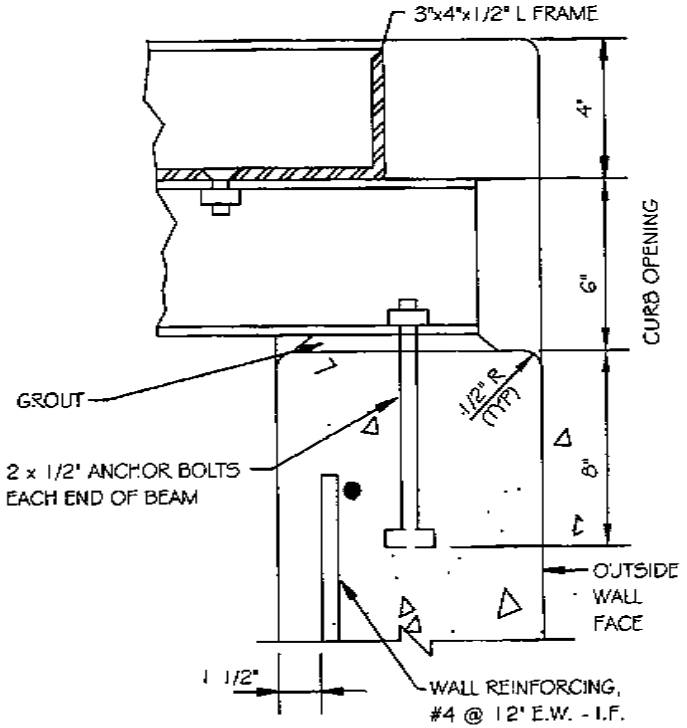

INLET CURB OPENING

CATCH BASIN WALL THICKNESS

T = 8" IF V IS UP TO 8'

(IF V EXCEEDS 8', SPECIAL DESIGN IS REQUIRED)

V = 3'-0" UNLESS OTHERWISE NOTED

DETAIL NO. C-507 NTS	CITY OF CHANDLER STANDARD DETAIL	BELOW GRADE RETENTION BASIN INLET (BUBBLER BOX)	APPROVED: _____ CITY ENGINEER DATE: 01/08/09	DETAIL NO. C-507 PAGE 3 OF 3

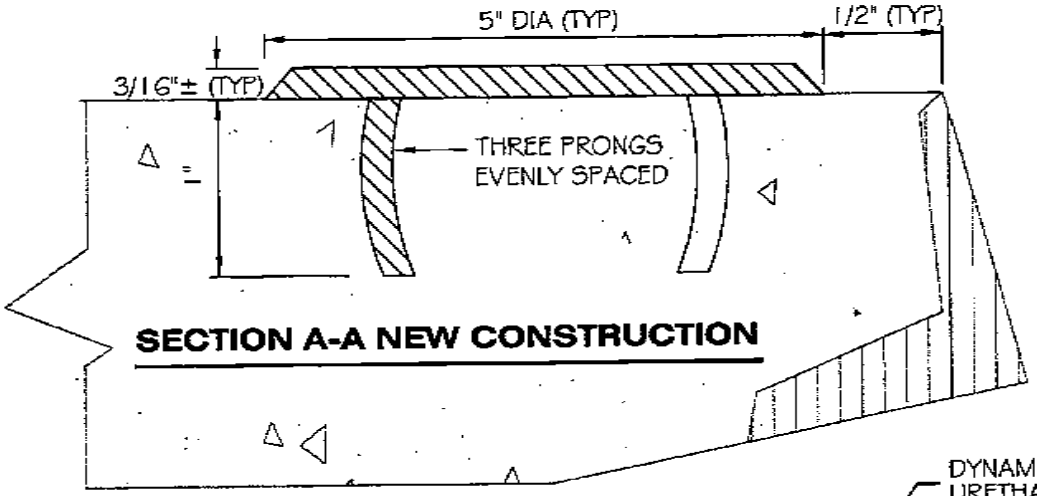

SECTION A-A NEW CONSTRUCTION

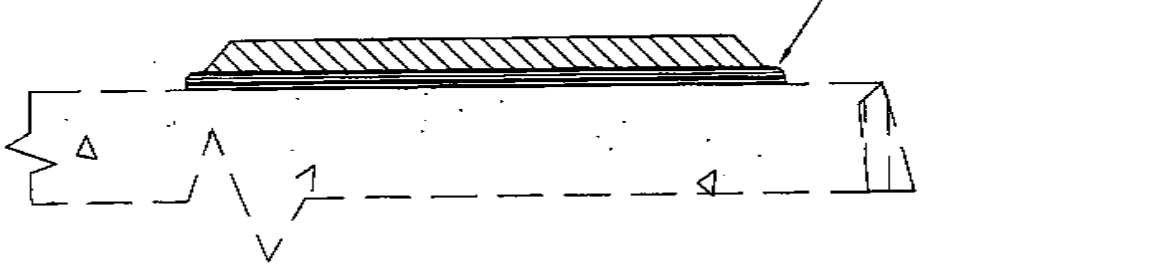

SECTION A-A EXISTING STRUCTURES

NOTES

1. MATERIAL: CAST ALUMINUM
2. THE WIDTH OF INDIVIDUAL LETTERS SHALL BE SELECTED SO THAT LETTERS AND WORDS ARE EQUALLY SPACED AND BALANCED.
3. LETTERS SHALL BE 1/2" IN HEIGHT. MARKER LAYOUT SHALL BE SUBMITTED FOR APPROVAL PRIOR TO FABRICATION.
4. MARKERS SHALL BE ALIGNED WITH THE CENTER OF DRAINAGE INLETS AT THE TOP OF CURB.

DETAIL NO. C-508 NTS	CITY OF CHANDLER STANDARD DETAIL	**STORM DRAIN INLET MARKER**	APPROVED: CITY ENGINEER DATE: 01/08/07	DETAIL NO. C-508 NTS

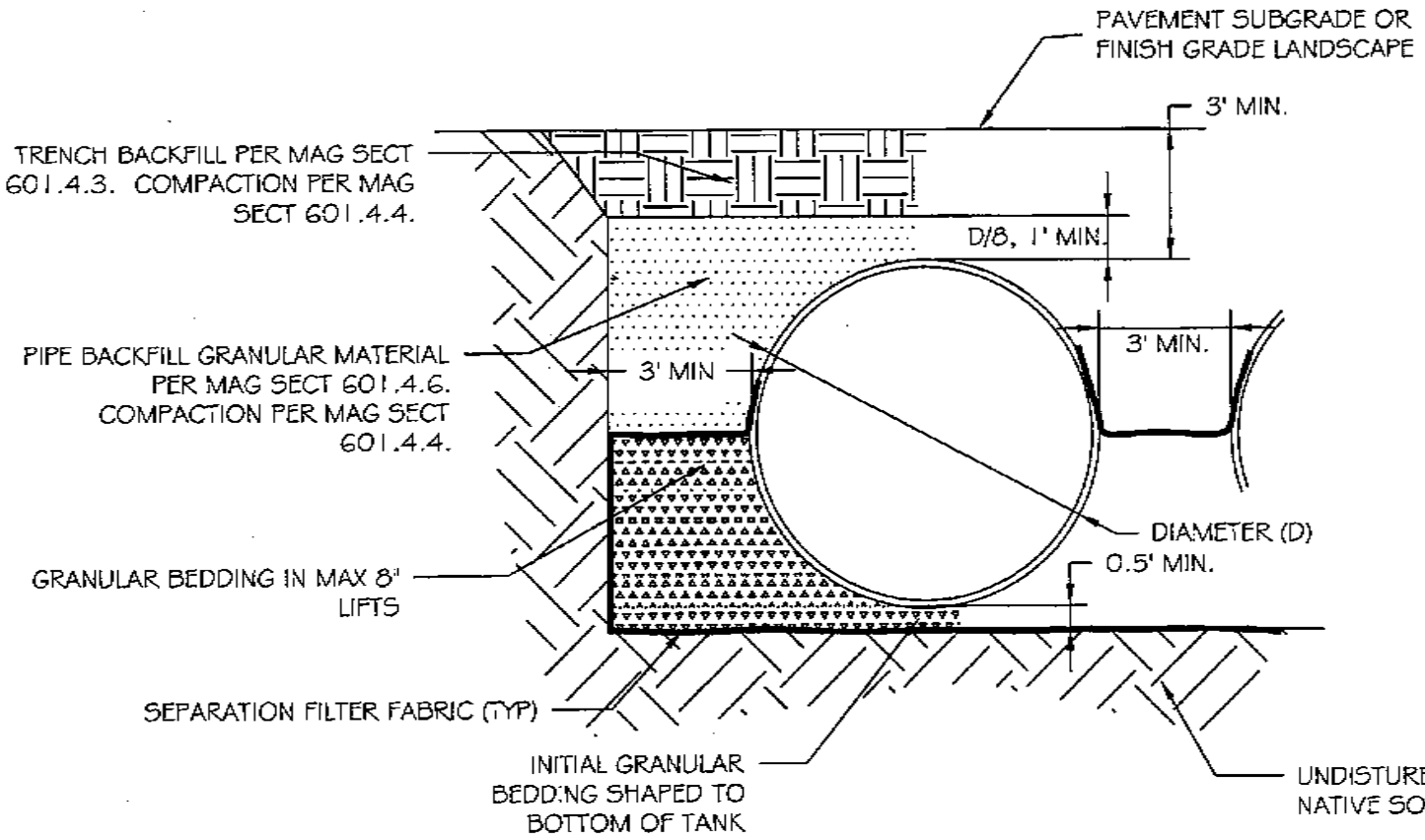

NOTES:

1. GRANULAR BEDDING SHALL BE ⅜" MINUS OPEN-GRADED CRUSHED ROCK COMPACTED IN 8" LIFTS USING VIBRATING COMPACTOR.
2. PLACEMENT AND COMPACTION OF THE GRANULAR BEDDING SHALL BE MONITORED AND CERTIFIED BY A GEOTECHNICAL ENGINEERING FIRM RETAINED BY THE OWNER OR CONTRACTOR.
3. ABC CONFORMING TO MAG SECT 702 MAY BE SUBSTITUTED FOR THE ⅜" CRUSHED ROCK. IN THAT CASE, COMPACTION SHALL BE AT LEAST 90% OF AASHTO T99 STANDARD PROCTOR DENSITY, AND THE SEPARATION FABRIC MAY BE OMITTED.
4. SEPARATION FILTER FABRIC SHALL BE NON-WOVEN, MODERATE SURVIVABILITY SUCH AS MIRAFI 160N, US FABRICS US 160NW, CARTHAGE MILLS FX-60HS, OR APPROVED EQUAL..

DETAIL NO. C-509 NTS	CITY OF CHANDLER STANDARD DETAIL	**BACKFILL DETAIL CMP UNDERGROUND RETENTION STORAGE TANK**	APPROVED: CITY ENGINEER DATE: 01/08/09	DETAIL NO. C-509 NTS

SIGNAGE SERIES

C-600 TO C-623

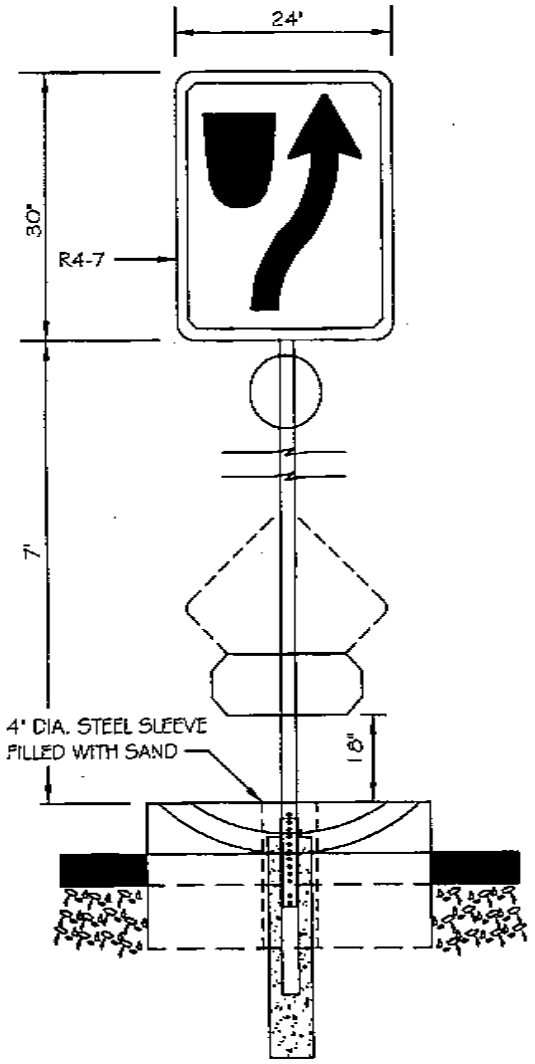

ARTERIAL INTERSECTIONS

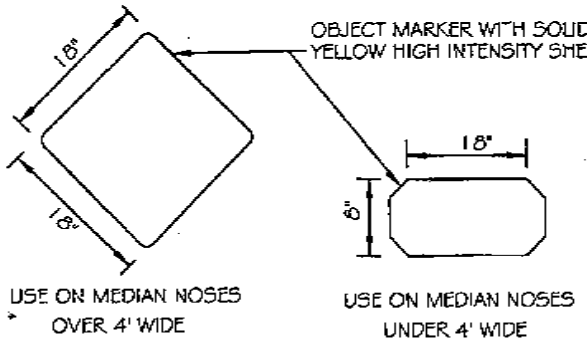

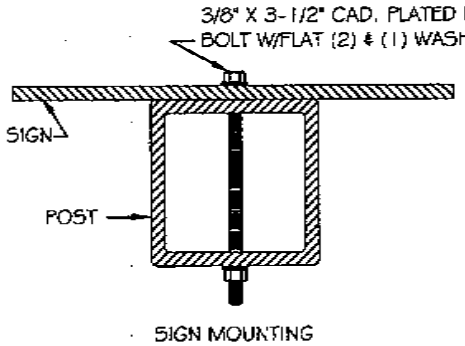

SIGN MOUNTING

DETAIL A

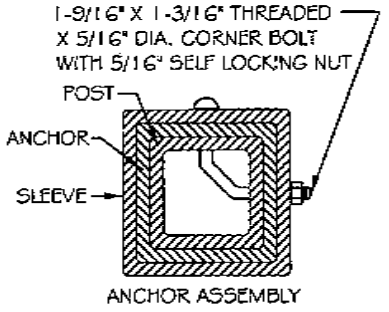

ANCHOR ASSEMBLY

DETAIL B

USE SAME POST SECTION SHOWN C-613 (SQUARE CHANNELS). DETAIL A & B AND BASE DETAIL

NOTES:

1. SIGNS SHALL BE INSTALLED 5' BACK OF FACE OF BULLNOSE ON MEDIANS 4' IN WIDTH OR LESS AND 10' BACK ON MEDIAN WIDTHS GREATER THAN 4'.
2. MUTCD R4-7 AND OBJECT MARKER SIGNS SHALL BE INSTALLED AT ALL ARTERIAL / ARTERIAL INTERSECTIONS AND AT THE POINT WHERE THE MEDIAN BEGINS.
3. SEE COC STANDARD DETAIL C-225 FOR BULLNOSE REQUIREMENTS.

DETAIL NO. C-600 NTS	CITY OF CHANDLER STANDARD DETAIL	**MEDIAN SIGNAGE**	APPROVED: _____ CITY ENGINEER DATE: 01/08/09	DETAIL NO. C-600 NTS

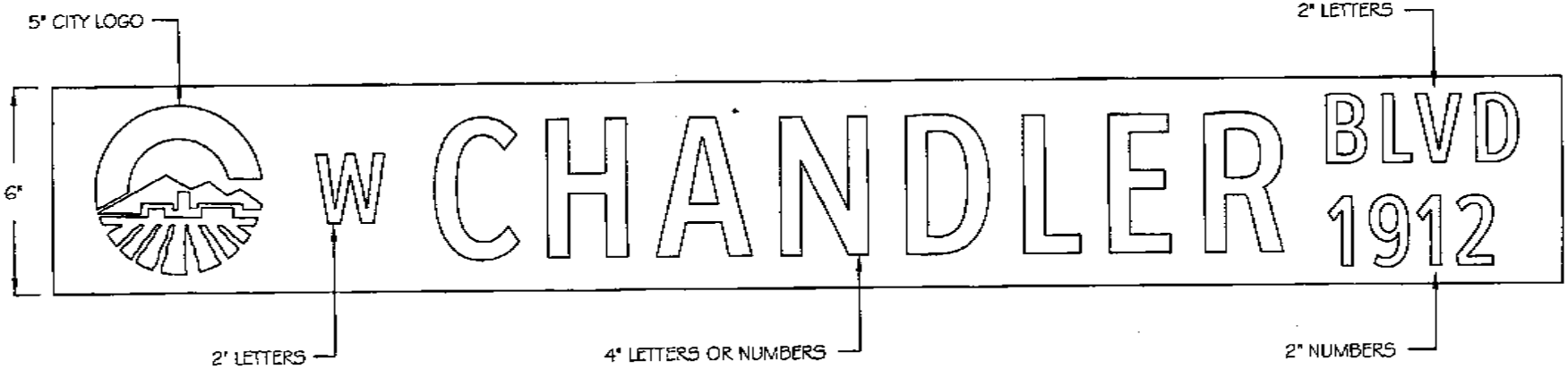

BLANKS - 6" EXTRUDED ALUMINUM BLADES
6" x 18" to 6" x 42" AS REQUIRED

HS-1 OR VSS-1 EXTRUSION

BACKGROUND - 3M WHITE HIGH INTENSITY PRISMATIC SHEETING SERIES 3930 COVERED WITH 3M BROWN ELECTRO CUT FILM SERIES 1179C

4" LETTERS - ClearviewHwy® 2-W Font
2" LETTERS - ClearviewHwy® 2-W Font

4" NUMBERS - ClearviewHwy® 2-W Font
2" NUMBERS - ClearviewHwy® 2-W Font

CITY LOGO - 8" WHITE, PRESSURE SENSITIVE, 3M HIGH INTENSITY PRISMATIC SHEETING SERIES 3930

DETAIL NO. C-601 NTS	CITY OF CHANDLER STANDARD DETAIL	**STREET NAME SIGNS (FOR PUBLIC STREETS)**	APPROVED: _____ CITY ENGINEER DATE: 01/06/09	DETAIL NO. C-601 PAGE 1 OF 2

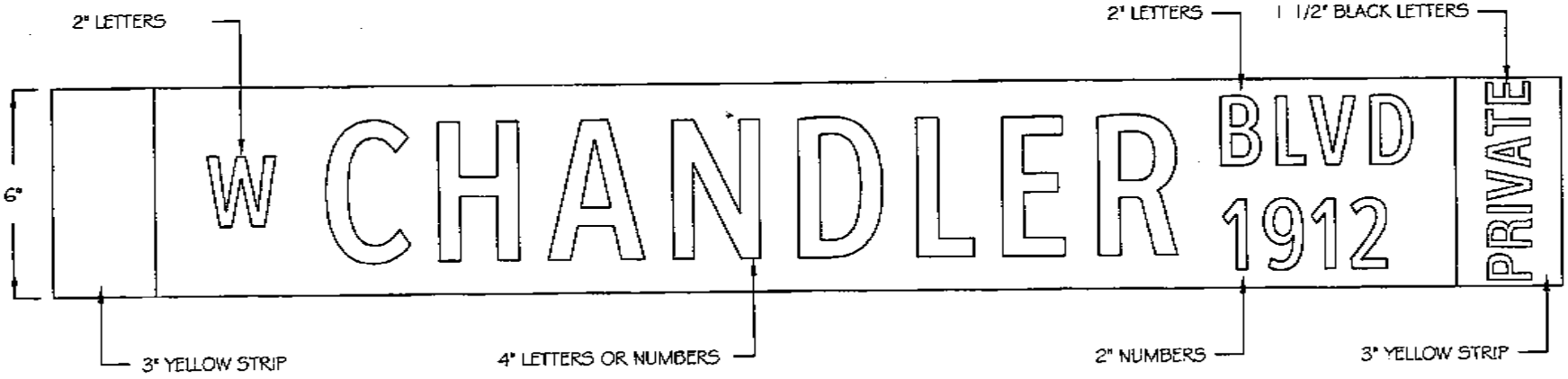

BLANKS - 6" EXTRUDED ALUMINUM BLADES
6" x 18" to 6" X 42" AS REQUIRED

HS-1 OR VSS-1 EXTRUSION

BACKGROUND - 3M WHITE HIGH INTENSITY PRISMATIC SHEETING SERIES 3930 COVERED WITH 3M BROWN ELECTRO CUT FILM SERIES 1179C

3" END STRIPS - 3M YELLOW HIGH INTENSITY PRISMATIC SHEETING SERIES 3931

4" LETTERS - ClearviewHwy® 2-W Font
2" LETTERS - ClearviewHwy® 2-W Font
1 1/2" LETTERS - ClearviewHwy® 2-W Font

4" NUMBERS - ClearviewHwy® 2-W Font
2" NUMBERS - ClearviewHwy® 2-W Font

DETAIL NO. C-601 NTS	CITY OF CHANDLER STANDARD DETAIL	**STREET NAME SIGNS (FOR PRIVATE STREETS)**	APPROVED: _____ CITY ENGINEER DATE: 01/08/09	DETAIL NO. C-601 PAGE 2 OF 2

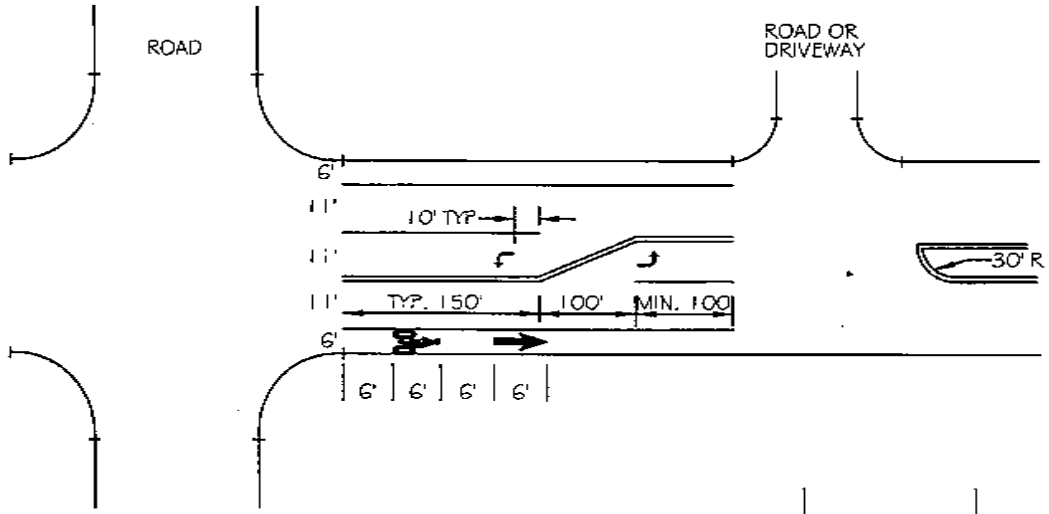

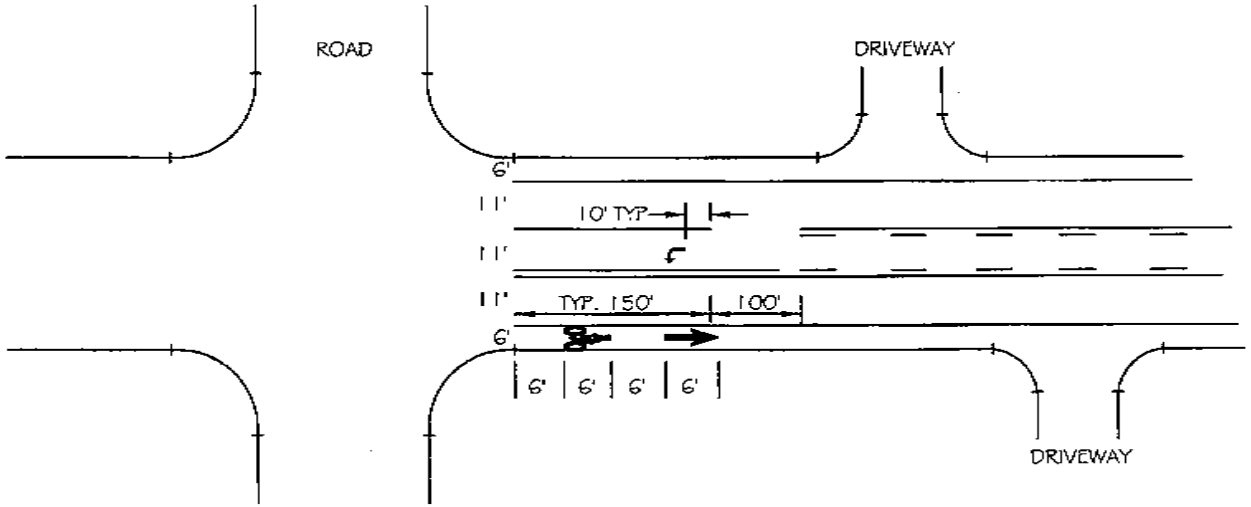

NOTES:

1. ALL DIMENSIONS TO BACK OF CURB.
2. DO NOT INSTALL REFLECTORS ON COLLECTOR ROADS.
3. INSTALL BIKE SYMBOL AND ARROW DOWNSTREAM FROM ALL INTERSECTIONS.
4. BREAK TWO-WAY LEFT TURN PAVEMENT MARKINGS FOR INTERSECTIONS. DO NOT BREAK FOR DRIVEWAYS.

DETAIL NO. C-602 NTS	CITY OF CHANDLER STANDARD DETAIL	**COLLECTOR ROAD PAVEMENT MARKINGS**	APPROVED CITY ENGINEER DATE: January 11, 2002	DETAIL NO. C-602 NTS

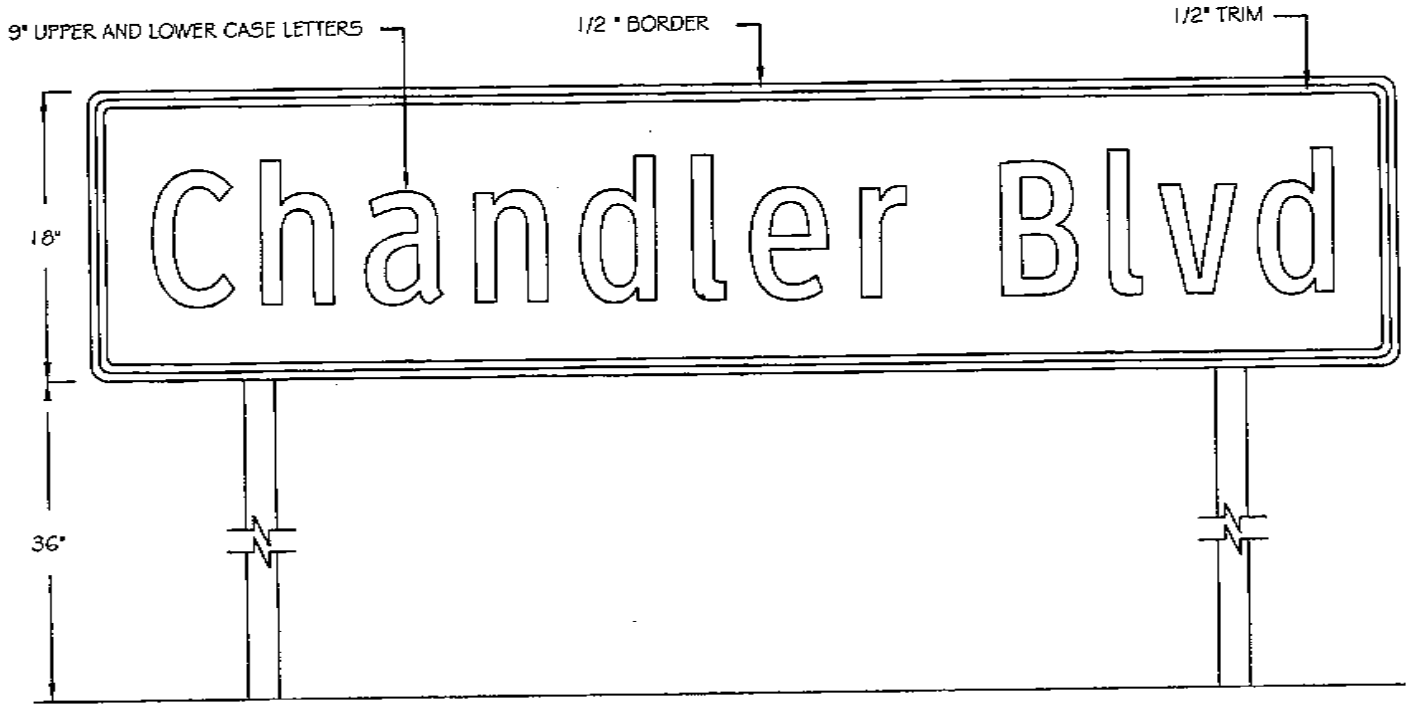

BLANKS - 18" ALUMINUM BLADES
18" x 48" to 18" x 120" AS REQUIRED

9" LETTERS/NUMBERS - ClearviewHwy® 2-W Font

BACKGROUND - 3M WHITE HIGH INTENSITY PRISMATIC SHEETING SERIES 3930 COVERED WITH 3M BROWN ELECTRO CUT FILM SERIES 1179C

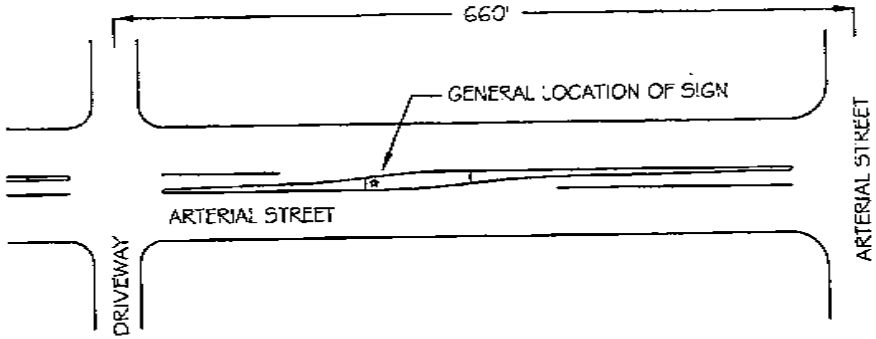

DETAIL NO. C-603 NTS	CITY OF CHANDLER STANDARD DETAIL	**ADVANCED STREET NAME SIGNS**	APPROVED: CITY ENGINEER DATE: 01/00/09	DETAIL NO. C-603 NTS

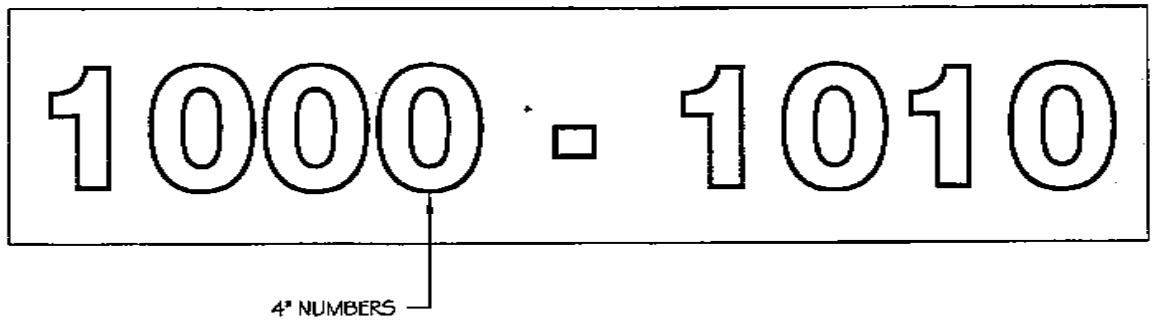

BLANKS - EXTRUDED ALUMINUM BLADES
MIN. 6" x 18" MAX. 6" x 48" AS REQUIRED
HS-1 OR VSS-1 EXTRUSION

BACKGROUND - 3M BROWN REFLECTIVE SHEETING,
HIGH INTENSITY GRADE, CODE NO. 2279 S/L

4" NUMBERS - 3M (PARKWAY WHITE) SERIES 'C'
HIGH INTENSITY GRADE

C-604 **REPLACES** **113B**	CITY OF CHANDLER STANDARD DETAIL	**ADDRESS IDENTIFICATION FOR CLUSTER DEVELOPMENTS**	APPROVED: _____ CITY ENGINEER DATE: 11-19-99	DETAIL NO. **C-604** NTS

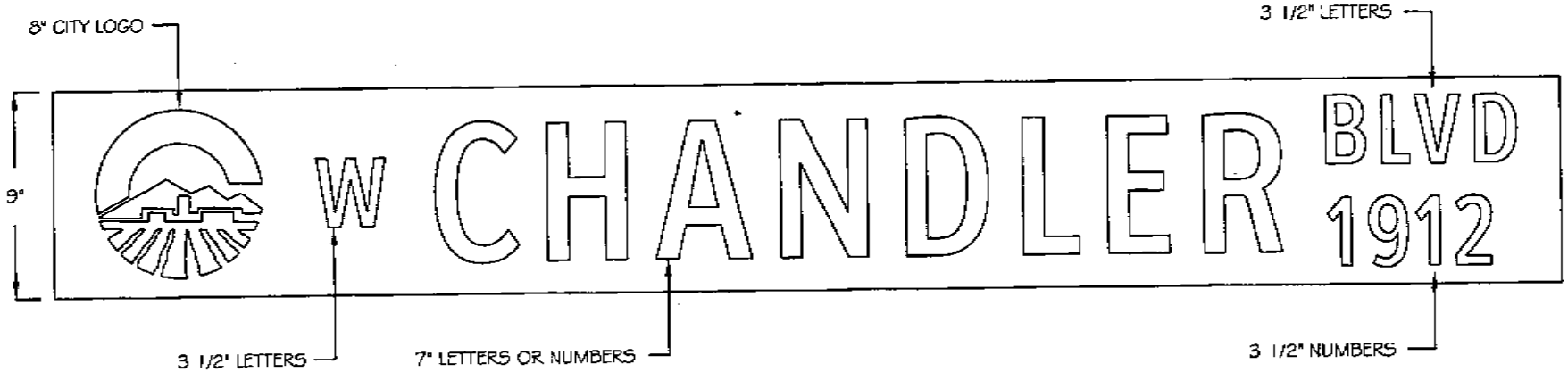

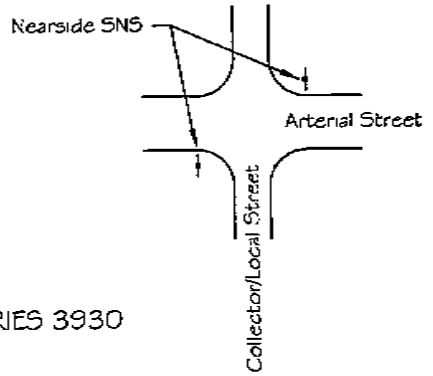

BLANKS - 9" EXTRUDED ALUMINUM BLADES
9" x 18" to 9" x 72" AS REQUIRED

HS-1 OR VSS-1 EXTRUSION

BACKGROUND - 3M WHITE HIGH INTENSITY PRISMATIC SHEETING SERIES 3930 COVERED WITH 3M BROWN ELECTRO CUT FILM SERIES 1179C

7" LETTERS - ClearviewHwy® 2-W Font
3 1/2" LETTERS - ClearviewHwy® 2-W Font

7" NUMBERS - ClearviewHwy® 2-W Font
3 1/2" NUMBERS - ClearviewHwy® 2-W Font

CITY LOGO - 8" WHITE, PRESSURE SENSITIVE, 3M HIGH INTENSITY PRISMATIC SHEETING SERIES 3930

DETAIL NO. C-605 NTS	CITY OF CHANDLER STANDARD DETAIL	**NEARSIDE STREET NAME SIGNS (FOR PUBLIC STREETS)**	APPROVED: _____ CITY ENGINEER DATE: 01/06/09	DETAIL NO. C-605 PAGE 1 OF 2

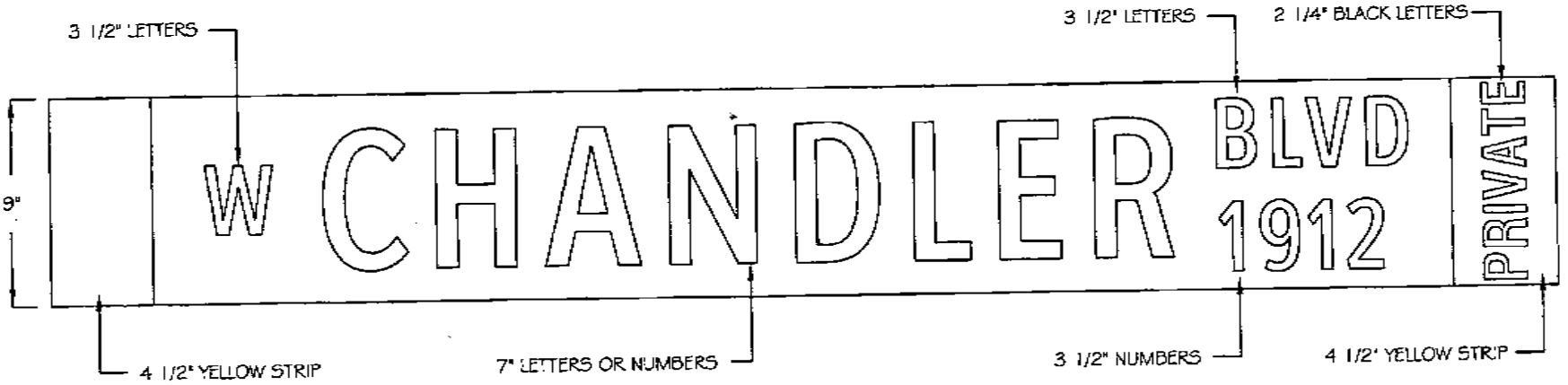

BLANKS - 9" EXTRUDED ALUMINUM BLADES
9" x 18" to 9" x 72" AS REQUIRED

HS-1 OR VSS-1 EXTRUSION

BACKGROUND - 3M WHITE HIGH INTENSITY PRISMATIC SHEETING SERIES 3930 COVERED WITH 3M BROWN ELECTRO CUT FILM SERIES 1179C

4.5" END STRIPS - 3M YELLOW HIGH INTENSITY PRISMATIC SHEETING SERIES 3931

7" LETTERS - ClearviewHwy® 2-W Font
3 1/2" LETTERS - ClearviewHwy® 2-W Font
2 1/4" LETTERS - ClearviewHwy® 2-W Font

7" NUMBERS - ClearviewHwy® 2-W Font
3 1/2" NUMBERS - ClearviewHwy® 2-W Font

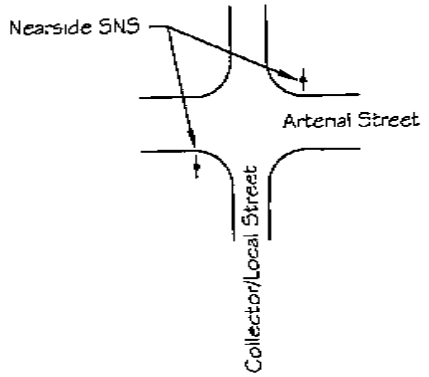

DETAIL NO. C-605 NTS	CITY OF CHANDLER STANDARD DETAIL	**NEARSIDE STREET NAME SIGNS (FOR PRIVATE STREETS)**	APPROVED: CITY ENGINEER DATE: 01/06/09	DETAIL NO. **C-605** PAGE 2 OF 2

OPPOSITE FACE

MOUNTING BRACKET IS ON THIS SIDE OF SIGN CABINET

F96T12CW/HO LAMPS
51-792R SIGN BALLAST
6I-PIN LAMP SOCKETS OPERATED BY PHOTOCELL ON POWER METER PEDESTAL;
SAME CIRCUIT AS STREETLIGHTS ON SIGNAL POLES

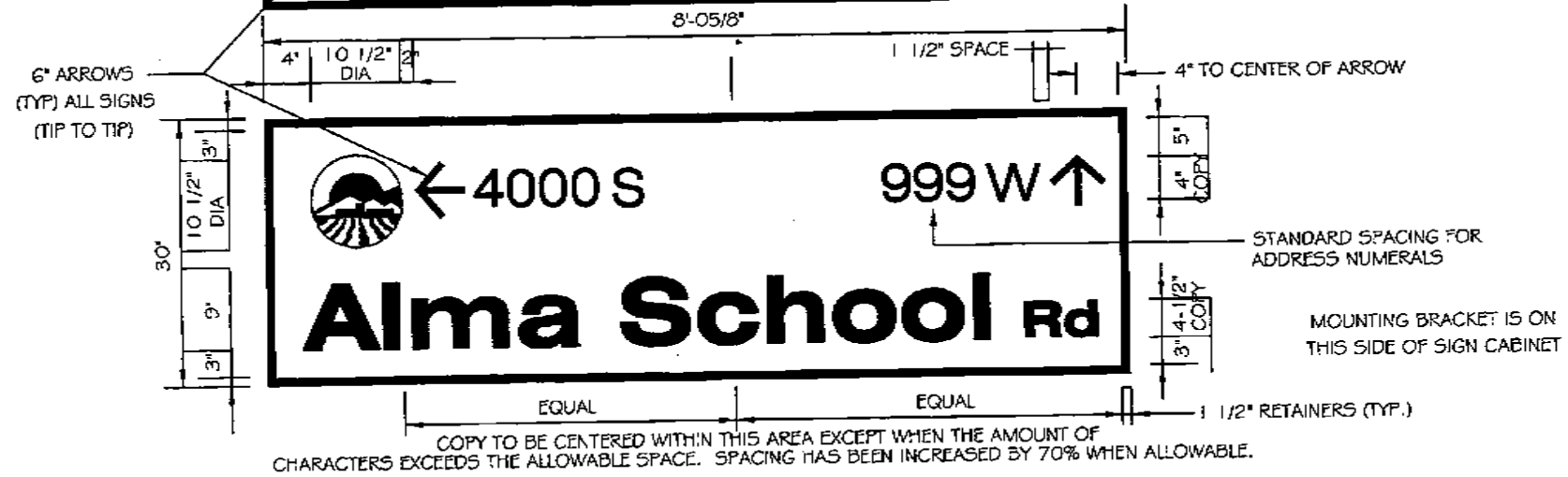

CABINET: EXTRUDED ALUMINUM 12" DEEP PRIMED AND PAINTED M.A.P. #41-342 BRUSHED ALUMINUM, SATIN FINISH. INCLUDE HINGED FACE WITH PROP ROD FOR SERVICE. RETAINERS PRIMED AND PAINTED SIMILARLY.

FACES: 3/16" THICK FLAT WHITE ACRYLIC WITH 1ST SURFACE APPLIED VINYL AS FOLLOWS:
ENTIRE BACKGROUND: #230-59 DARK BROWN
SKY SEMI-CIRCLE SHAPE: #230-35 DARK BLUE
MOUNTAINS: #230-61 SLATE GREY
FURROWS: #230-49 BURGUNDY
ALL COPY AND CIRCULAR BACKGROUND FOR THE LOGO ARE WHITE ACRYLIC FACES SHOWING THROUGH.

TYPESTYLE: HELVETICA MEDIUM U & L/C STD. SPACING FOR THE ADDRESS NUMERALS AND OPENED-UP SPACING FOR THE STREET NAMES IF ALLOWABLE

ILLUMINATION: FLUORESCENT INTERNAL 800 M.A. AS REQUIRED.

DETAIL NO. C-606 NTS	CITY OF CHANDLER STANDARD DETAIL	**INTERNALLY ILLUMINATED STREET NAME SIGN**	APPROVED: _____ CITY ENGINEER DATE: 01/08/09	DETAIL NO. C-606 NTS

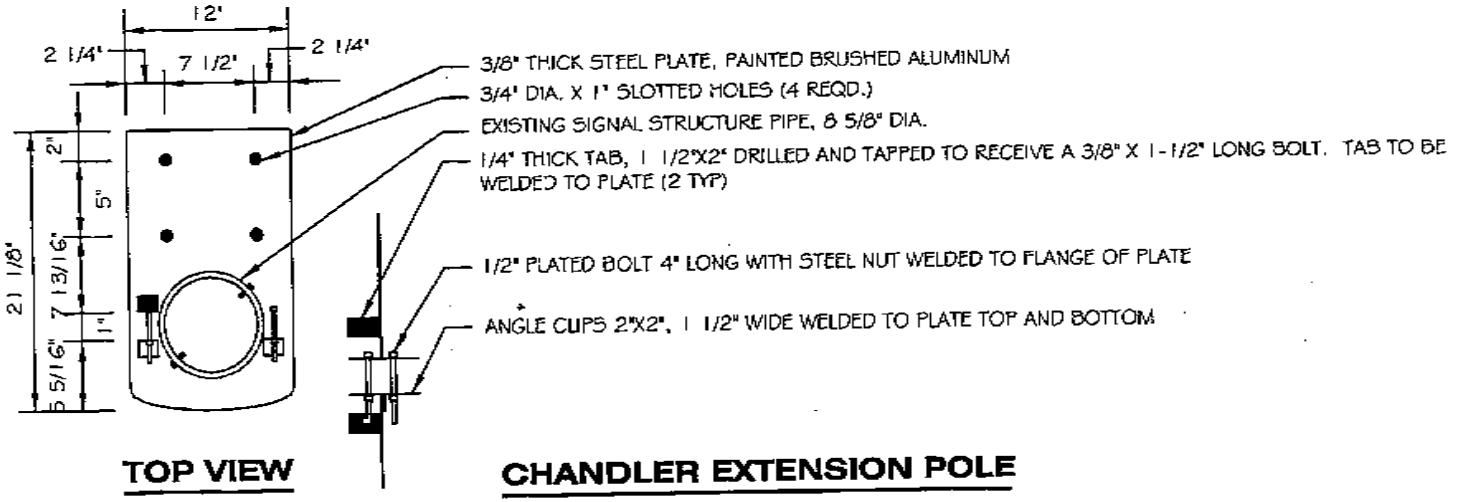

TOP VIEW

CHANDLER EXTENSION POLE

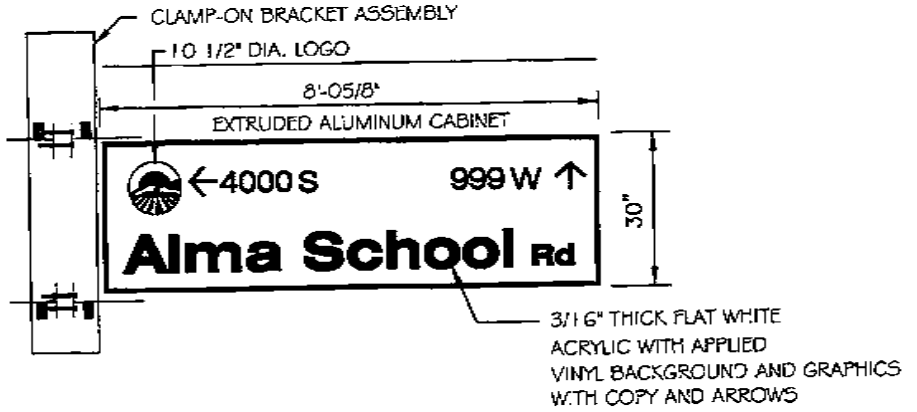

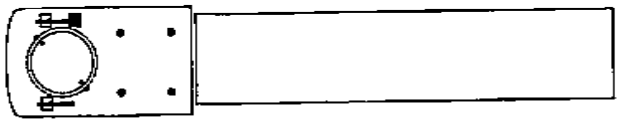

TOP VIEW

FRONT AND FACE DETAIL

DETAIL NO. C-607 NTS	CITY OF CHANDLER STANDARD DETAIL	**INTERNALLY ILLUMINATED STREET NAME SIGN - BRACKET ASSEMBLY**	APPROVED: CITY ENGINEER DATE: 01/06/09	DETAIL NO. C-607 NTS

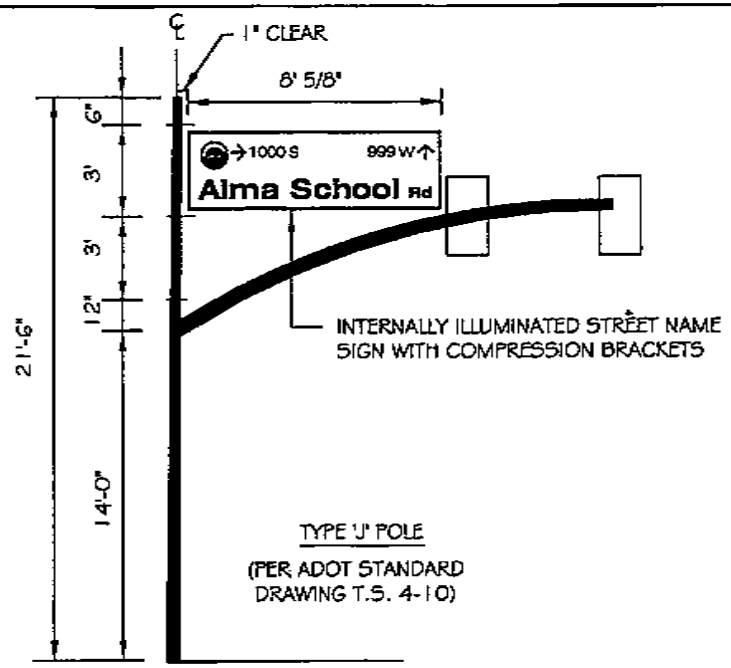

ELEVATION

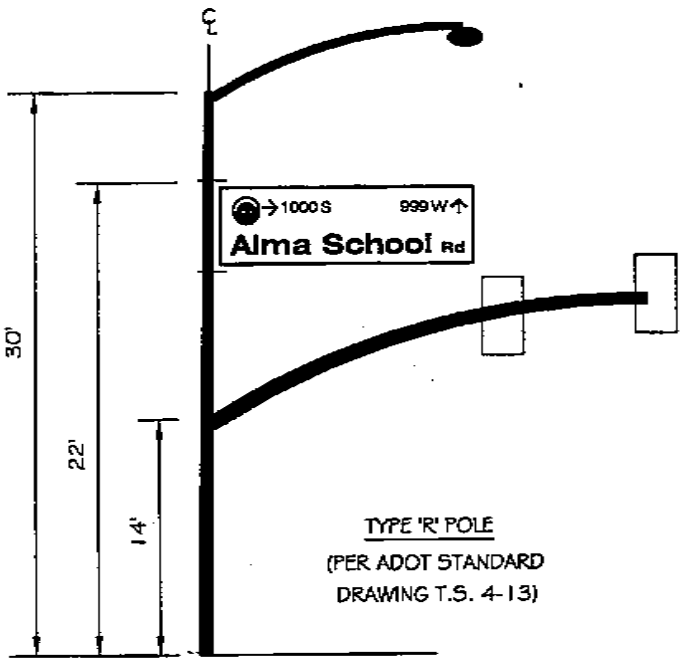

ELEVATION

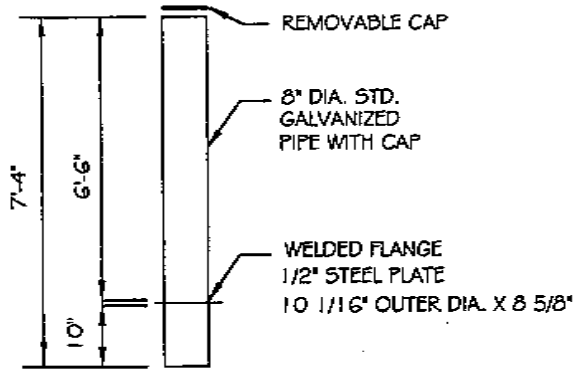

EXTENSION BRACKET DETAIL

C-608 REPLACES 110B	CITY OF CHANDLER STANDARD DETAIL	**INTERNALLY ILLUMINATED STREET NAME SIGN - J/R POLE MOUNTING**	APPROVED: CITY ENGINEER DATE: 11-19-99	DETAIL NO. **C-608** NTS

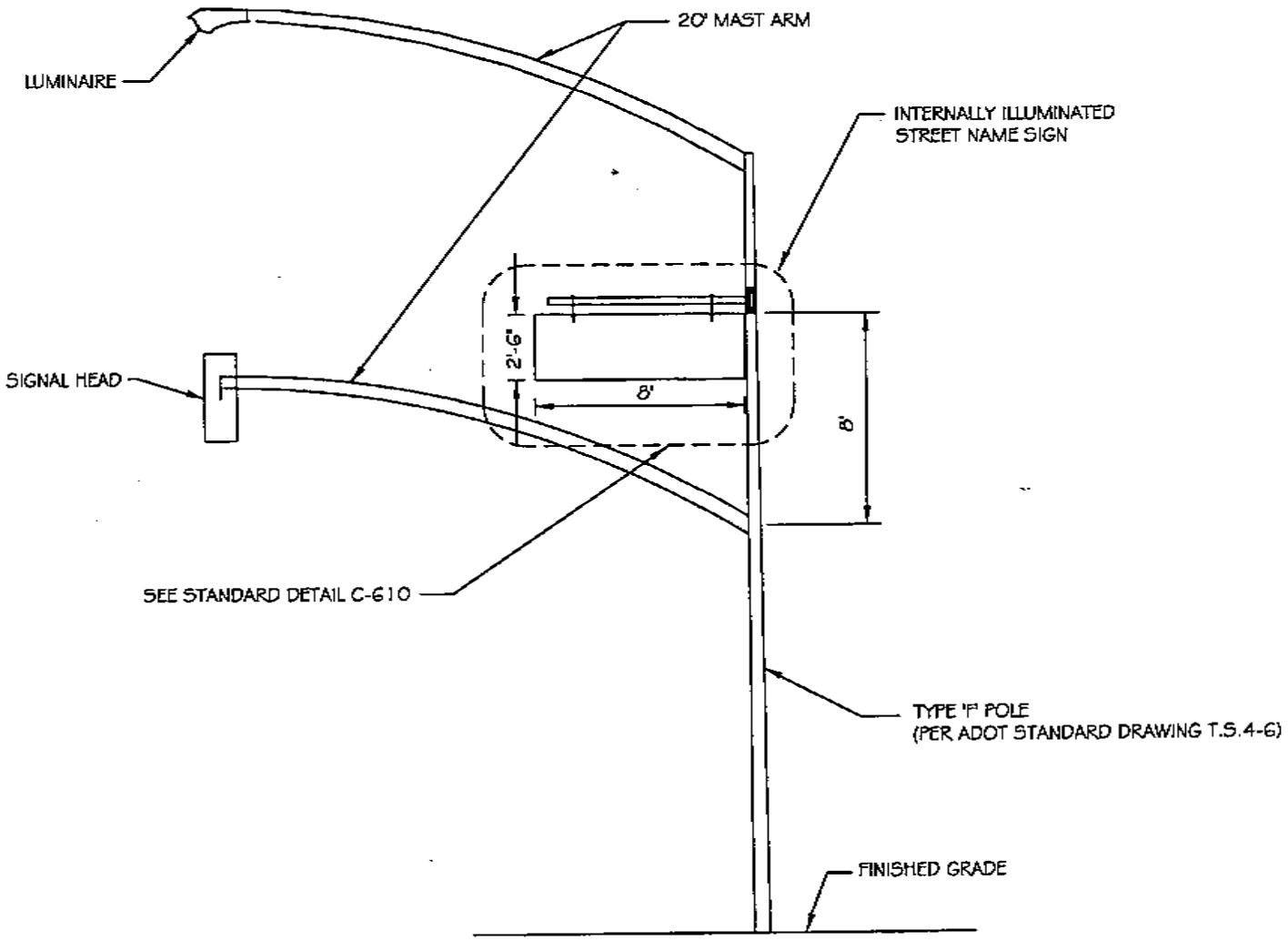

C-609 **REPLACES** **110C**	CITY OF CHANDLER STANDARD DETAIL	**INTERNALLY ILLUMINATED STREET NAME SIGN - F POLE MOUNTING**	APPROVED: Bryan D. Patterson CITY ENGINEER DATE: 11-19-99	DETAIL NO. **C-609** NTS

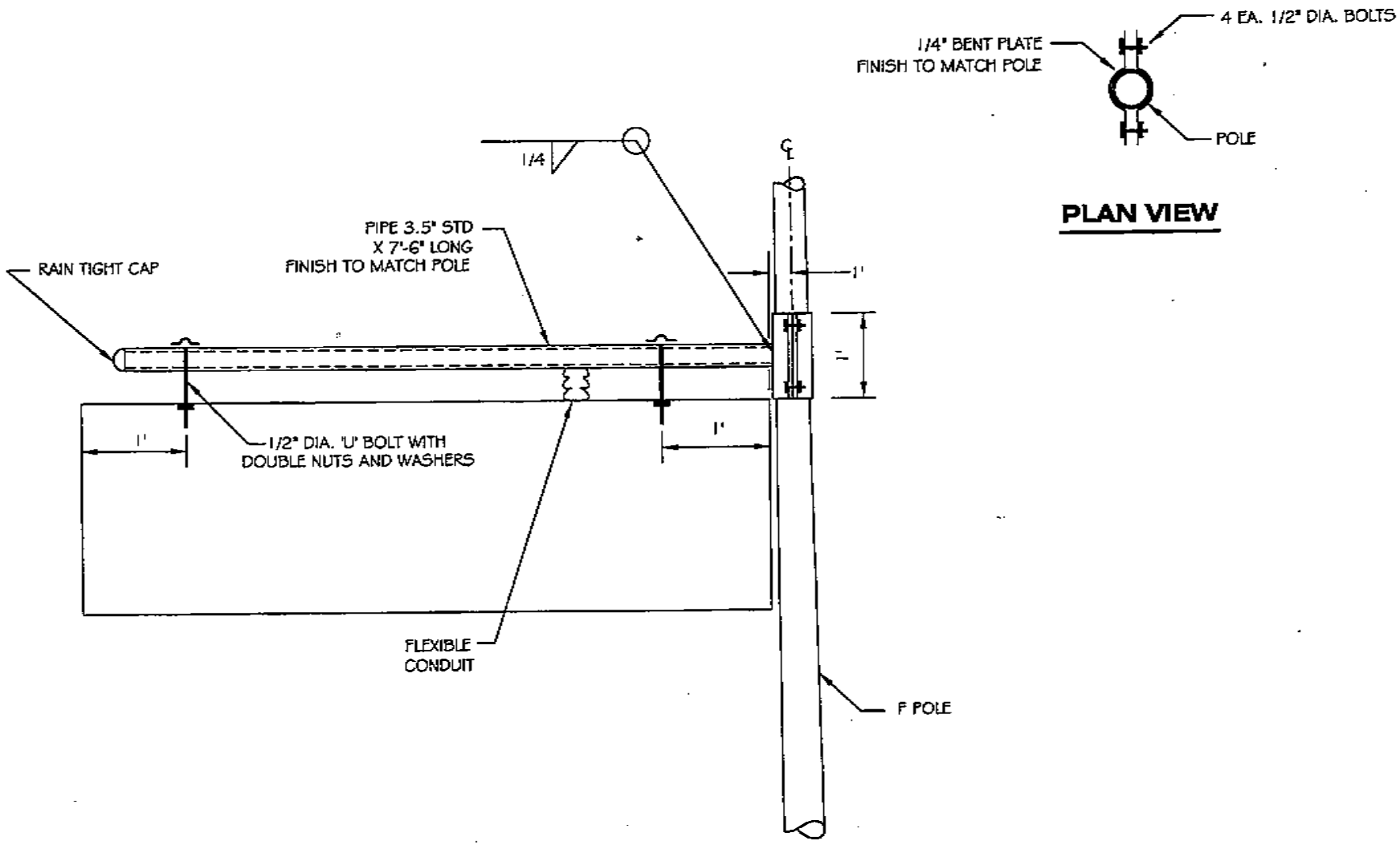

NOTE:

FINISHED SIGN SHALL BE ABLE TO SWING ABOUT MAST.

C-610 **REPLACES** **110D**	CITY OF CHANDLER STANDARD DETAIL	**INTERNALLY ILLUMINATED STREET NAME SIGN F POLE MOUNTING DETAIL**	APPROVED: Bryan D. Patterson CITY ENGINEER DATE: 11-19-99	DETAIL NO. **C-610** NTS

COLOR: BLUE COPY - WHITE BACKGROUND
USE HIGH INTENSITY GRADE REFLECTIVE SHEETING

DETAIL NO. C-611 NTS	CITY OF CHANDLER STANDARD DETAIL	HANDICAP PARKING SPACE SIGN	APPROVED: CITY ENGINEER DATE: 01/08/09	DETAIL NO. C-611 NTS

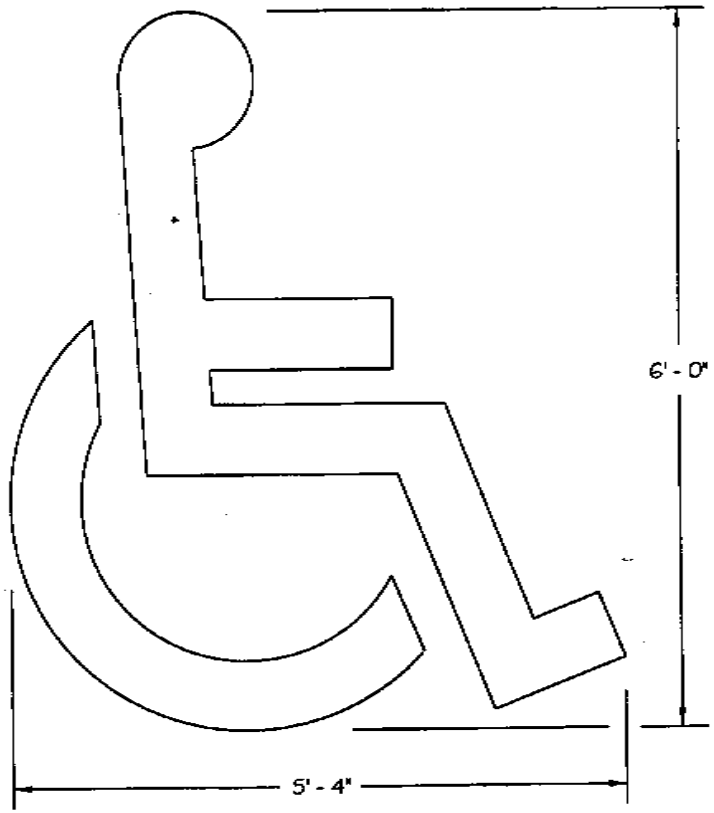

NOTES:

1. PAVEMENT MARKINGS SHALL BE WHITE.
2. HANDICAPPED PARKING SPACE FOR A CAR SHALL BE 13 FEET WIDE AND 19 FEET LONG.
3. HANDICAPPED PARKING SPACE FOR A VAN SHALL BE 16 FEET WIDE AND 19 FEET LONG.

C-612 **REPLACES** **61**	CITY OF CHANDLER STANDARD DETAIL	**HANDICAP PAVEMENT MARKING SYMBOL**	APPROVED: CITY ENGINEER DATE: 11-19-99	DETAIL NO. **C-612** NTS

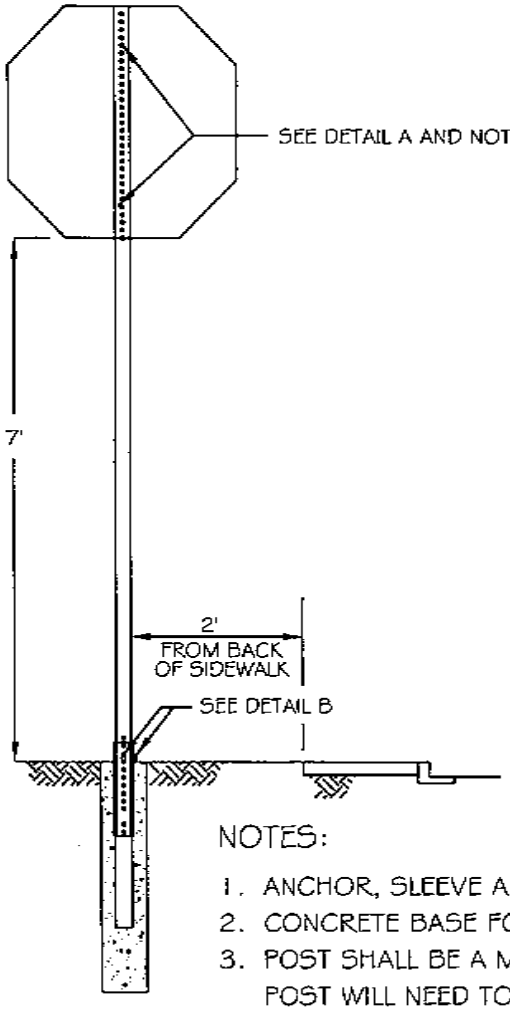

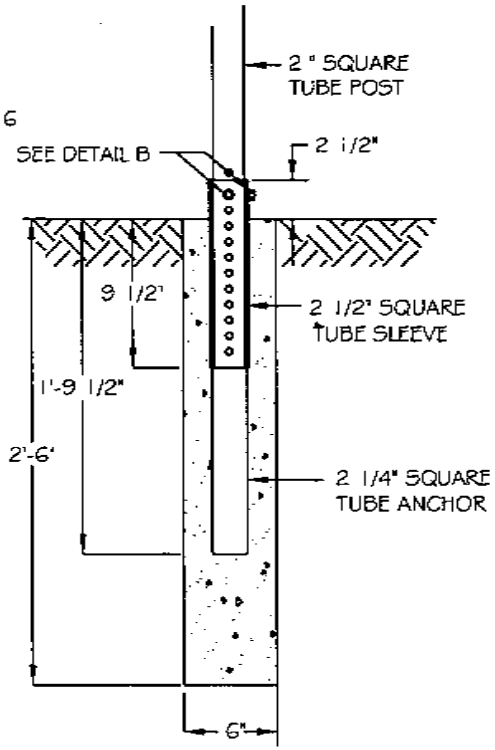

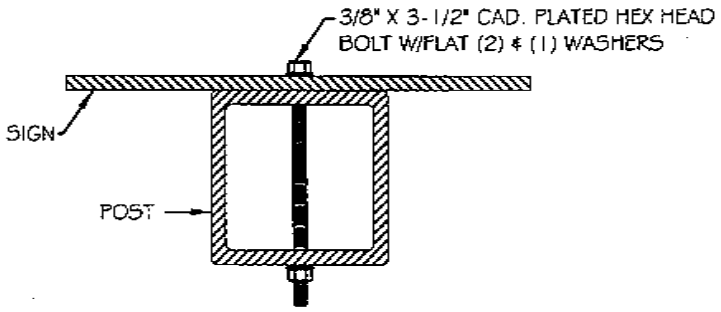

SIGN MOUNTING

DETAIL A

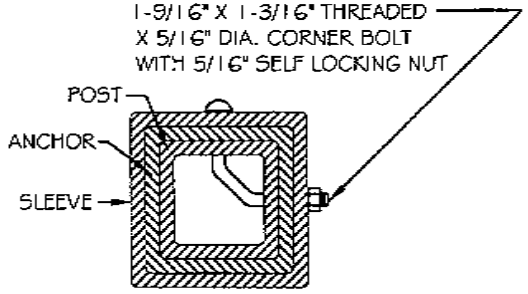

ANCHOR ASSEMBLY

DETAIL B

NOTES:

1. ANCHOR, SLEEVE AND POST ALL TO BE 12 GAUGE, .105 INCH GALVANIZED STEEL.
2. CONCRETE BASE FOUNDATION SHALL BE CLASS 'C' CONCRETE AS PER MAG STANDARD SPECIFICATIONS SEC. 505 + 725.
3. POST SHALL BE A MINIMUM LENGTH OF 11' AND SHALL BE INSERTED NOT LESS THAN 12" INTO THE ANCHOR. POST WILL NEED TO BE 12' IN LENGTH FOR ALL 'WARNING' SIGN INSTALLATIONS.
4. THE FRONT AND BACK SIDES OF POST SHALL HAVE 7/16" HOLES PUNCHED ON 1" CENTERS FOR THE TOP 30" AND THE BOTTOM 12" ONLY.
5. ANCHOR SHALL HAVE HOLES PUNCHED FOR THE TOP 3" ONLY AND BOTTOM TAPED TO PREVENT CONCRETE FROM SEEPING IN DURING INSTALLATION.
6. THE POST SHALL HAVE NO HOLES AT THE TOP 30" WHEN INSTALLING STREET NAME SIGNS ONLY.

C-613 **REPLACES** **40**	CITY OF CHANDLER STANDARD DETAIL	**SIGN POST AND BASE**	APPROVED: _____ CITY ENGINEER DATE: 2/26/07	DETAIL NO. **C-613** NTS

LANE LINE

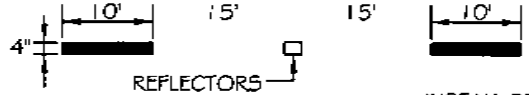

TURN LANE

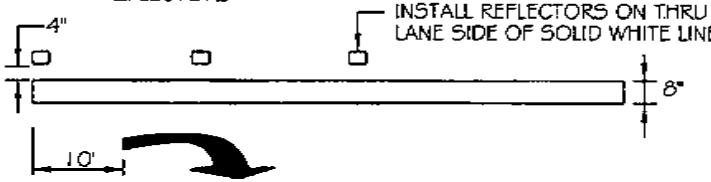

LANE DROP

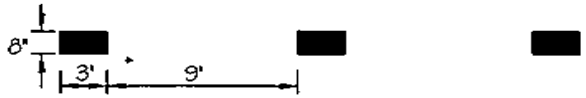

EDGE LINES

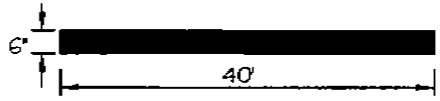

REFLECTORS AT 40' SPACING IN TRANSITION AREAS ONLY

DOUBLE YELLOW

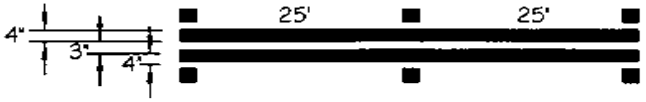

GUIDE LINES

THRU INTERSECTIONS

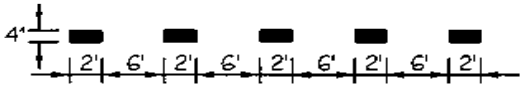

BIKE LANE

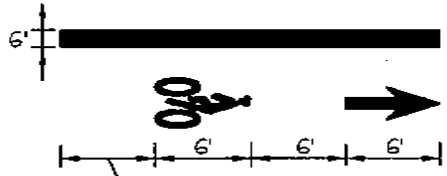

TWO-WAY LEFT TURN LANE

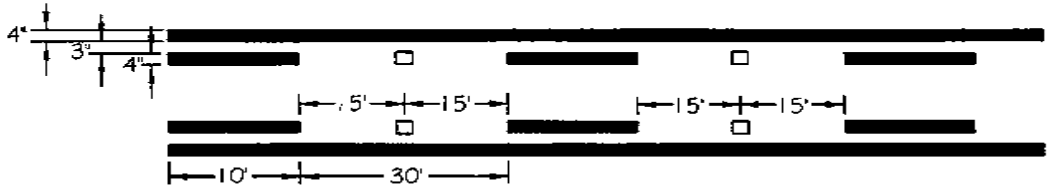

NOTE: ALL CROSS WALKS, STOP BARS, MINI-SKIPS, AND TURN LANE MARKINGS SHALL BE THERMOPLASTIC.

DETAIL NO. C-614 NTS	CITY OF CHANDLER STANDARD DETAIL	PAVEMENT MARKING DETAILS	APPROVED: CITY ENGINEER DATE: 2/20/07	DETAIL NO. C-614 NTS

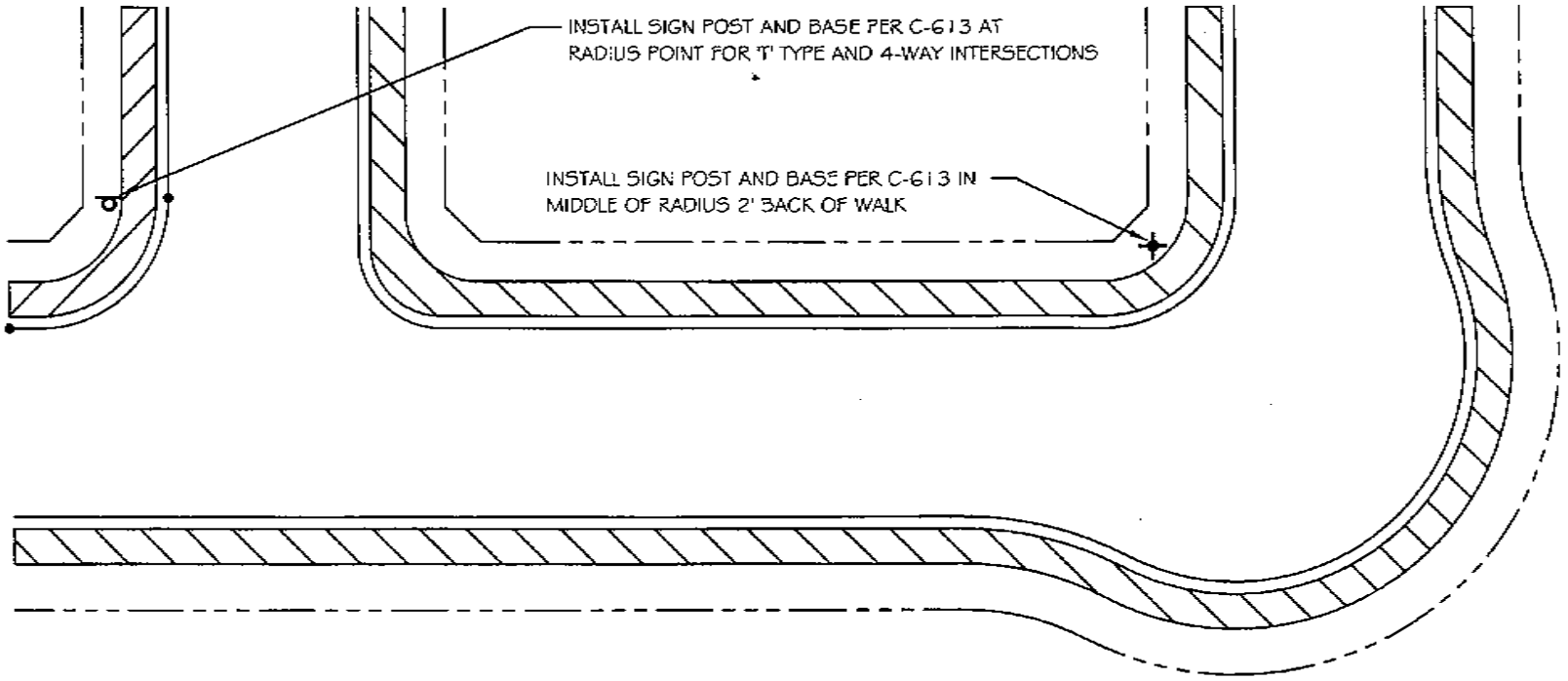

C-615	CITY OF CHANDLER STANDARD DETAIL	**SIGN POST AND BASE LOCATIONS FOR RESIDENTIAL STREETS**	APPROVED: CITY ENGINEER DATE: January 11, 2002	DETAIL NO. **C-615** NTS

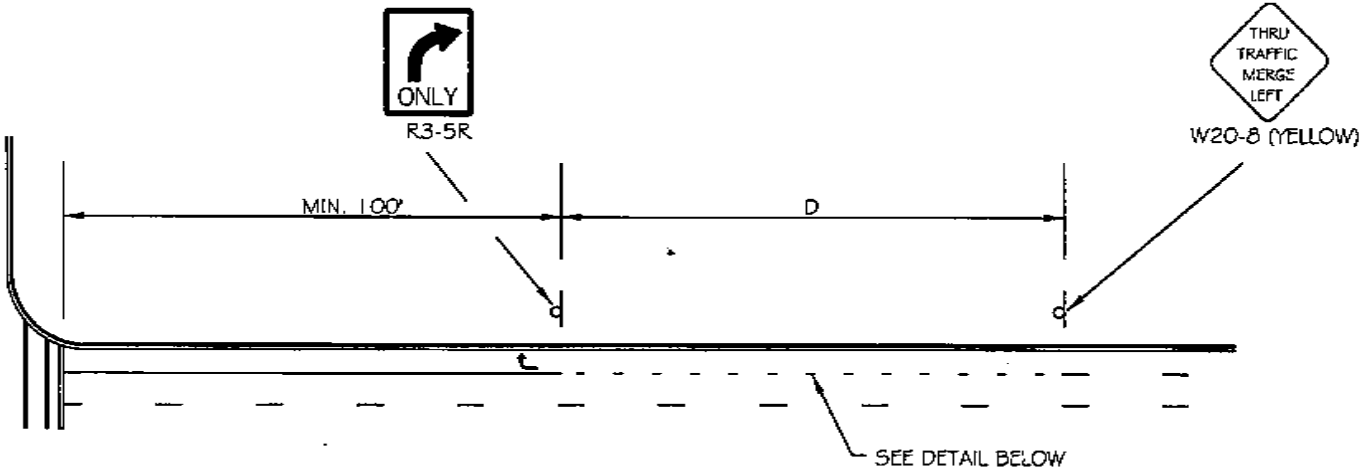

SPEED LIMIT	D* (FT)
20	175
25	250
30	325
35	400
40	475
45	550
50	625
55	700
60	775

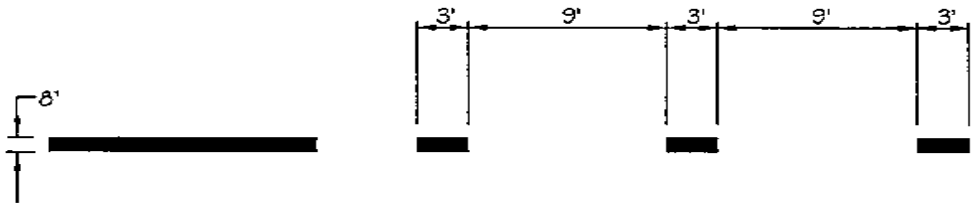

DETAIL A: FROM MUTCD FIGURE 3B-10

*FROM MUTCD TABLE 2C-4

DETAIL NO. C-616 NTS	CITY OF CHANDLER STANDARD DETAIL	**RIGHT TURN LANE DROP**	APPROVED: CITY ENGINEER DATE: 2/24/07	DETAIL NO. C-616 NTS

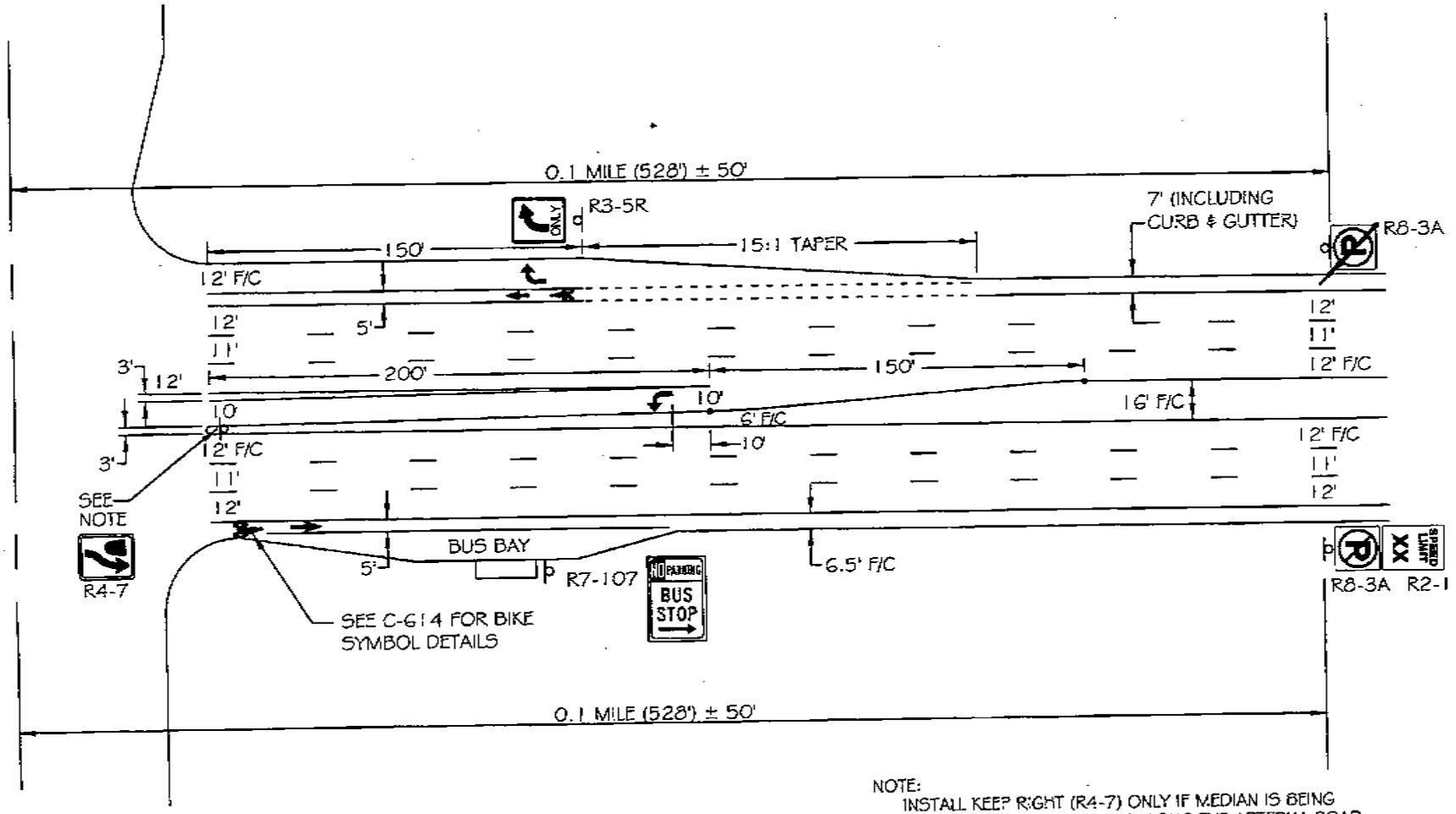

NOTE:
INSTALL KEEP RIGHT (R4-7) ONLY IF MEDIAN IS BEING INTRODUCED AT THIS POINT ALONG THE ARTERIAL ROAD OR AT SIGNALIZED INTERSECTIONS

DETAIL NO. C-618 NTS	CITY OF CHANDLER STANDARD DETAIL	**TYPICAL SIGNS AND MARKINGS ARTERIAL ROAD**	APPROVED: CITY ENGINEER DATE: 01/06/09	DETAIL NO. C-618 NTS

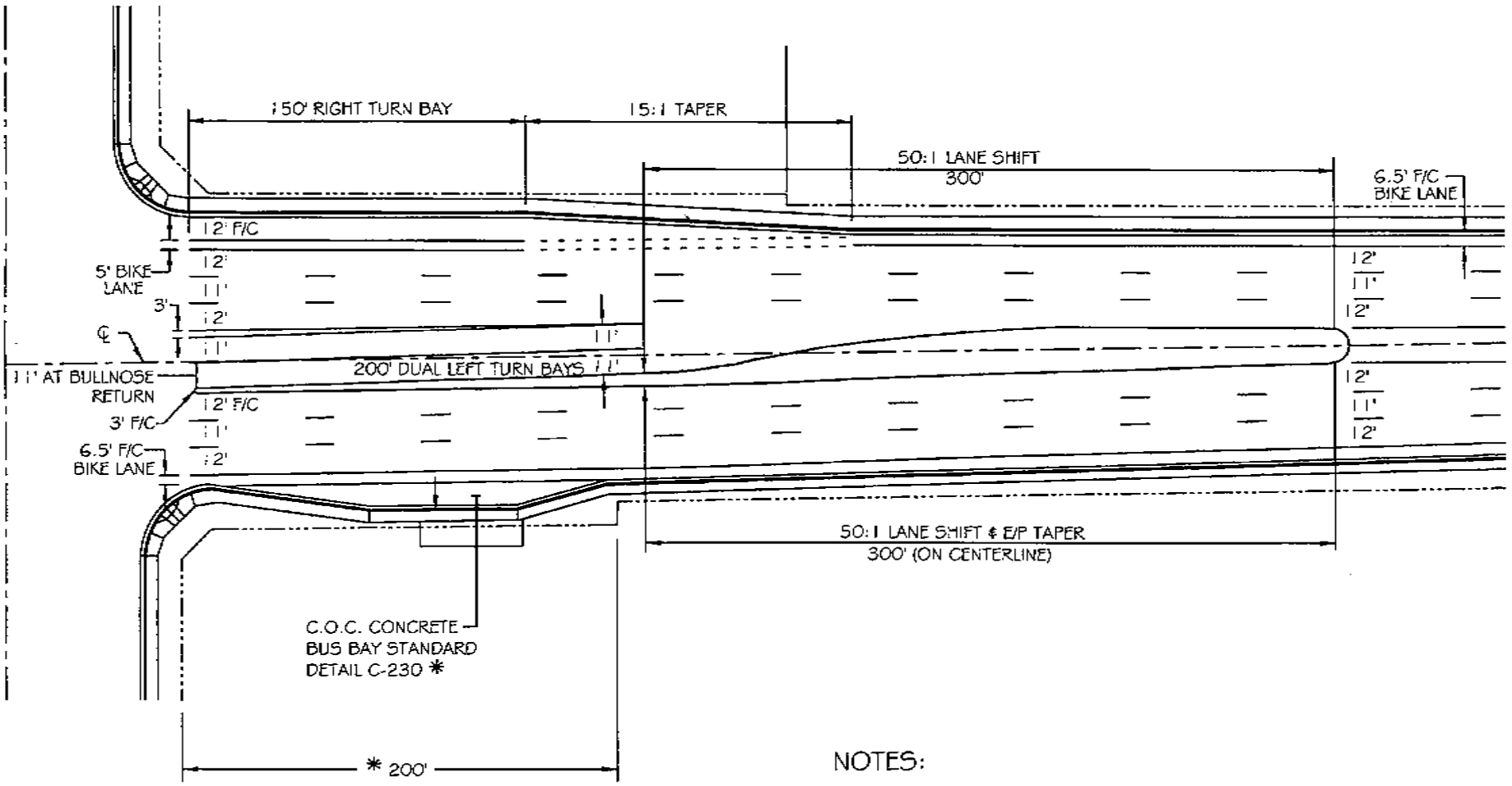

NOTES:

50 : 1 TAPERS FOR REDIRECTION OF THROUGH LANES

15 : 1 TAPERS FOR RIGHT TURN BAY APPROACHES

ALL DIMENSIONS TO CENTER OF LANE LINE UNLESS OTHERWISE NOTED

DETAIL NO. C-619 NTS	CITY OF CHANDLER STANDARD DETAIL	**TYPICAL LANE WIDTHS - ARTERIAL ROAD WITH DOUBLE LEFT TURNS**	APPROVED: CITY ENGINEER DATE: 2/26/07	DETAIL NO. C-619 NTS

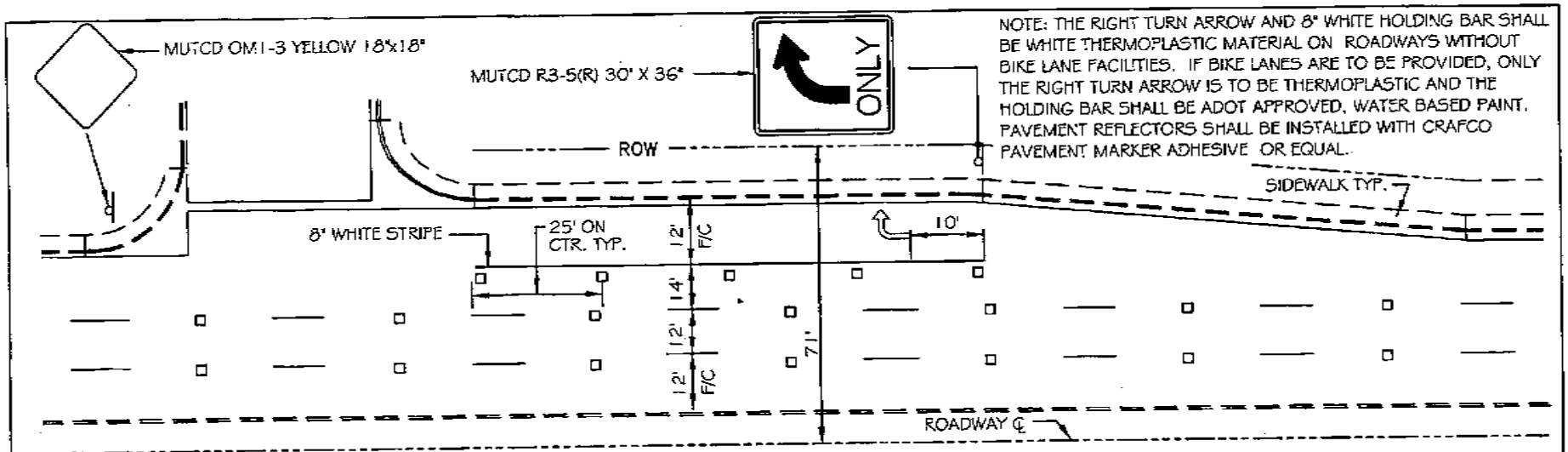

WITHOUT BIKE LANES

(PRE 1993 ARTERIAL)

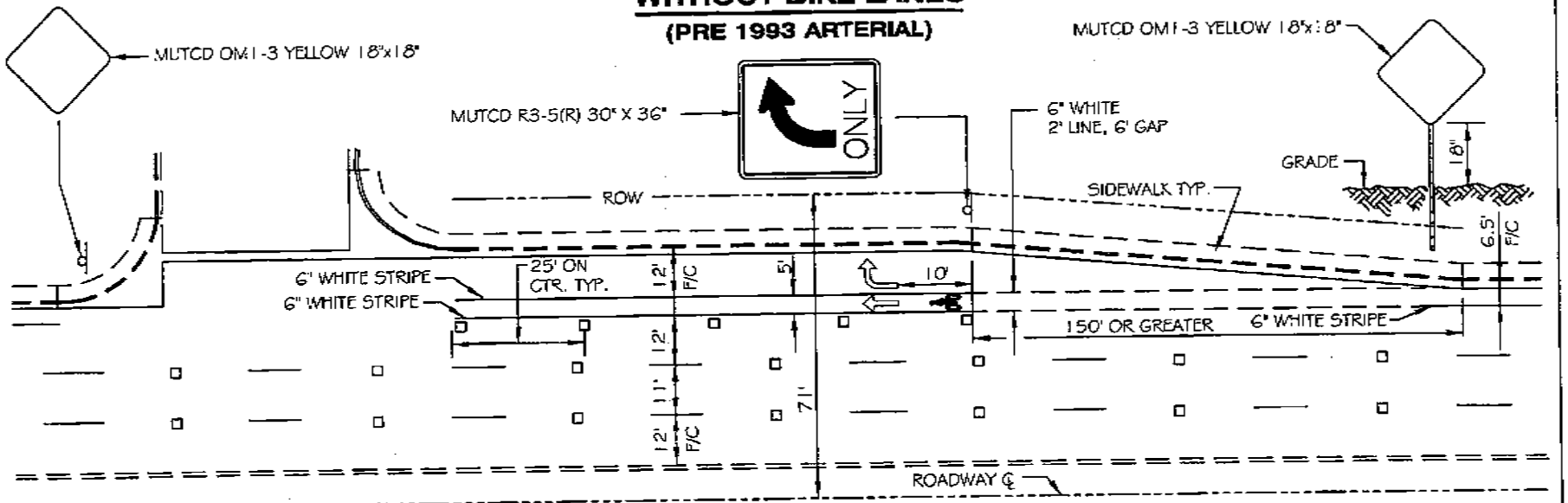

WITH BIKE LANES

DETAIL NO. C-620 NTS	CITY OF CHANDLER STANDARD DETAIL	MAJOR ARTERIAL DECELERATION LANE SIGNING AND STRIPING	APPROVED: CITY ENGINEER DATE: 01/08/09	DETAIL NO. C-620 NTS

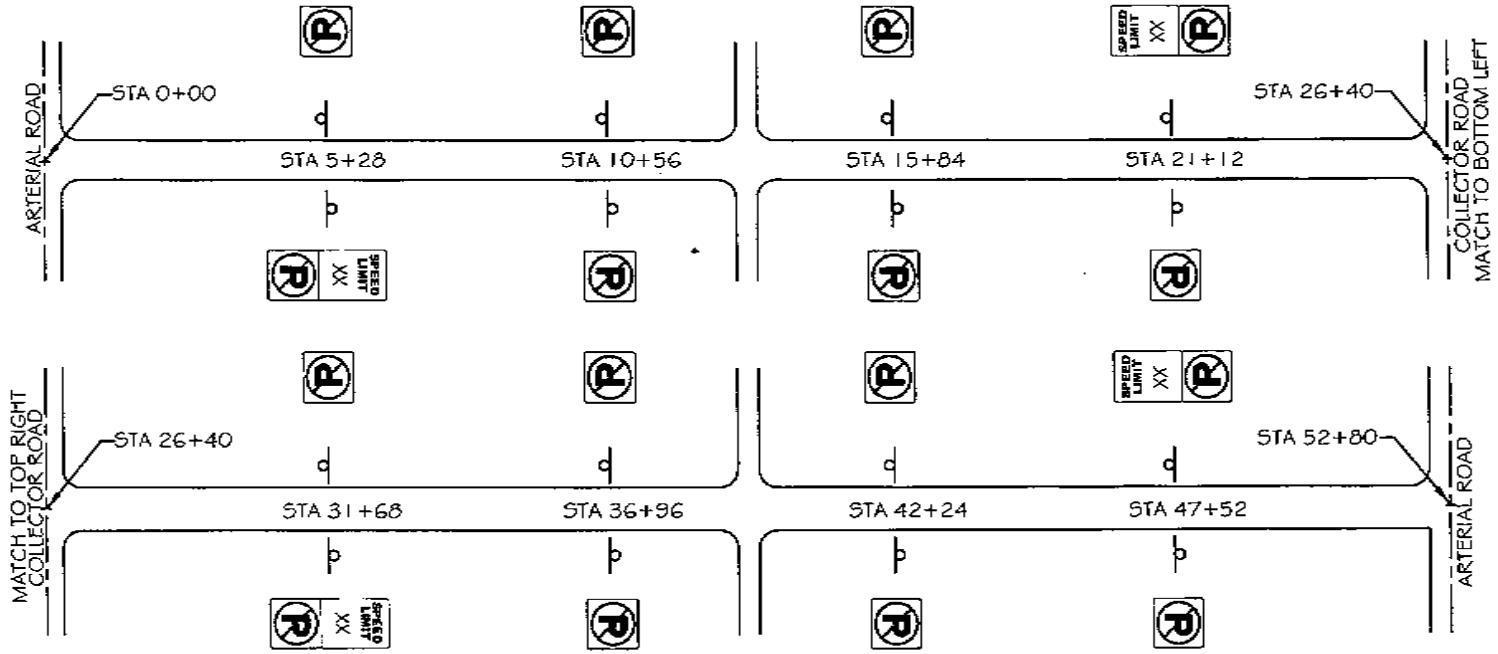

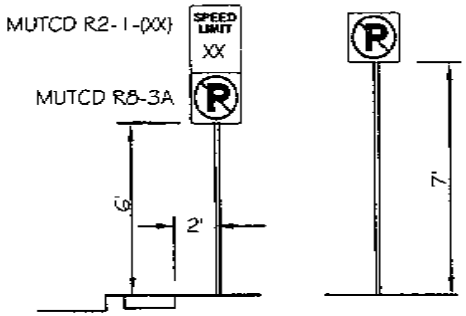

NOTE: SIGNING SHOWN ONLY REPRESENTS THE PLACEMENT OF THE NO-PARKING AND SPEED LIMIT SIGNS. ADDITIONAL SIGNING MAY BE REQUIRED DEPENDING ON EACH INDIVIDUAL SITUATION.

THE SPACING OF THE NO-PARKING SIGNS SHOULD BE 528' (1/10 MILE) APART, BUT MAY VARY UP TO 50' IF SIGN CAN BE MOUNTED ONTO A EXISTING POLE OR A STREET LIGHT POLE.

NO-PARKING SIGNS SHALL BE 24"x24" UNLESS OTHERWISE NOTED.

SPEED LIMIT SHALL BE DETERMINED BY THE CITY ENGINEER AND THE SIGN SHALL BE 24"x30" IN SIZE. THERE SHALL BE 4 SPEED LIMIT SIGNS PER MILE AS SHOWN ABOVE.

DETAIL NO. C-621 NTS	CITY OF CHANDLER STANDARD DETAIL	**ARTERIAL SIGNAGE**	APPROVED: Elizabeth Brown CITY ENGINEER DATE: January 11, 2002	DETAIL NO. C-621 NTS

SEE INTERSECTION STRIPING DETAIL FOR STRIPING WIDTHS AND NOTES ON STRIPING AND REFLECTOR MATERIAL SPECIFICATIONS.

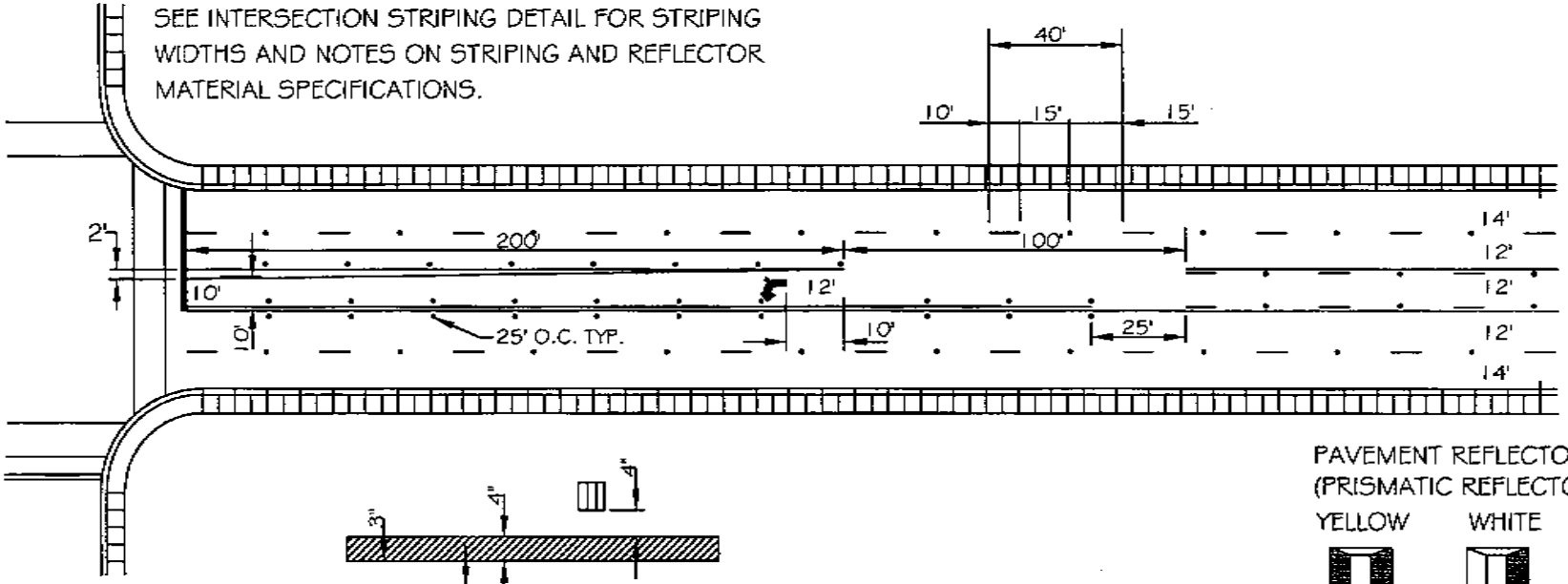

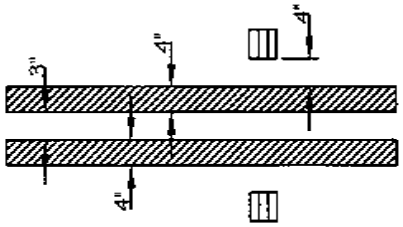

PAVEMENT REFLECTORS
(PRISMATIC REFLECTORS ONLY)

YELLOW WHITE

INSTALL WITH
CRAFCO BITUMINOUS
MATERIAL OR EQUAL

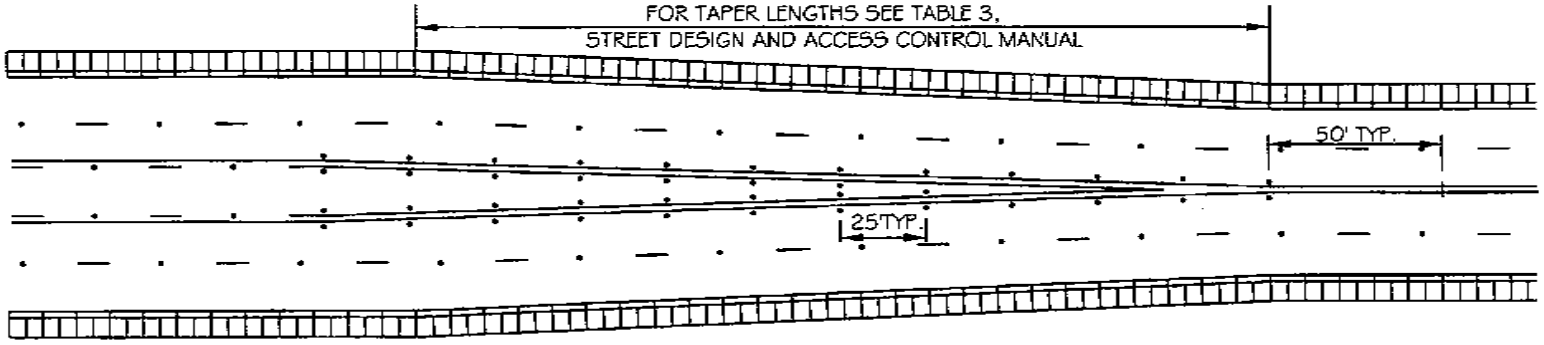

DETAIL NO. C-622 NTS	CITY OF CHANDLER STANDARD DETAIL	**ARTERIAL ROADWAY MARKINGS (W/O MEDIANS)**	APPROVED: CITY ENGINEER DATE: 2/26/07	DETAIL NO. C-622 NTS

CROSSWALK AND STOP BAR STRIPING SHALL ONLY BE STRIPED AT SIGNALIZED OR MULTI-WAY STOP CONTROLLED INTERSECTIONS, UNLESS OTHERWISE NOTED BY THE TRAFFIC ENGINEERING OFFICE.

ROADWAYS WITHOUT BIKE LANES WILL HAVE DIFFERENT CROSS-SECTION. THE LANE WIDTHS WILL BE THE SAME WITH THE EXCEPTION OF THE OUTER LANES WHICH ARE 15'± MEASURED FROM BACK OF CURB.

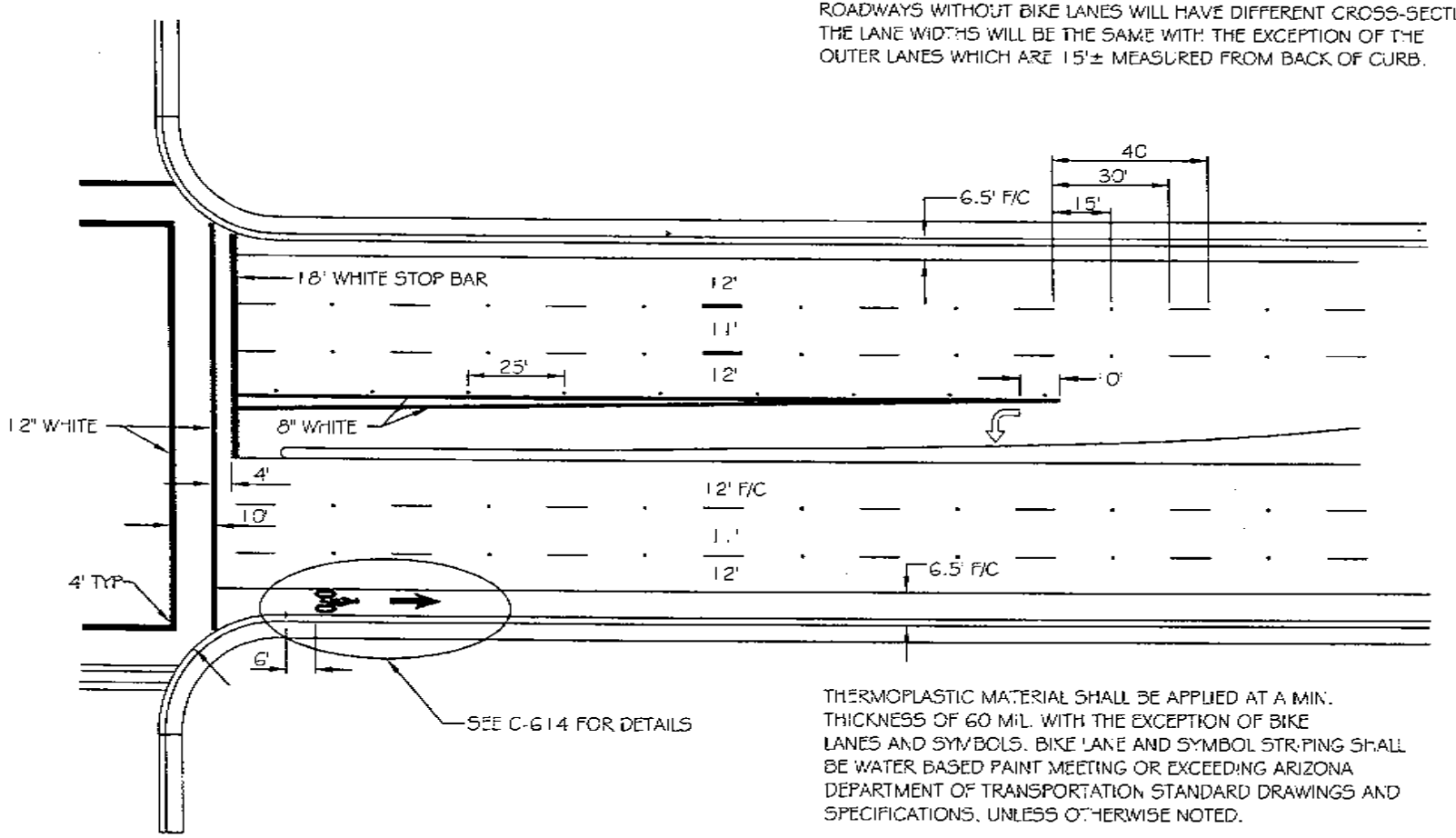

THERMOPLASTIC MATERIAL SHALL BE APPLIED AT A MIN. THICKNESS OF 60 MIL. WITH THE EXCEPTION OF BIKE LANES AND SYMBOLS. BIKE LANE AND SYMBOL STRIPING SHALL BE WATER BASED PAINT MEETING OR EXCEEDING ARIZONA DEPARTMENT OF TRANSPORTATION STANDARD DRAWINGS AND SPECIFICATIONS, UNLESS OTHERWISE NOTED.

PAVEMENT REFLECTORS SHALL BE INSTALLED WITH CRAFCO PAVEMENT MARKER ADHESIVE, OR EQUAL. ALL PAVEMENT REFLECTORS SHALL BE WHITE WITH THE PRISMATIC REFLECTIVE SURFACE FACING ONCOMING TRAFFIC.

DETAIL NO. C-623 NTS	CITY OF CHANDLER STANDARD DETAIL	**INTERSECTION MARKINGS (WITH MEDIANS)**	APPROVED: CITY ENGINEER DATE: 01-27-11	DETAIL NO. C-623 NTS

LANDSCAPE SERIES

C-801 TO C-817

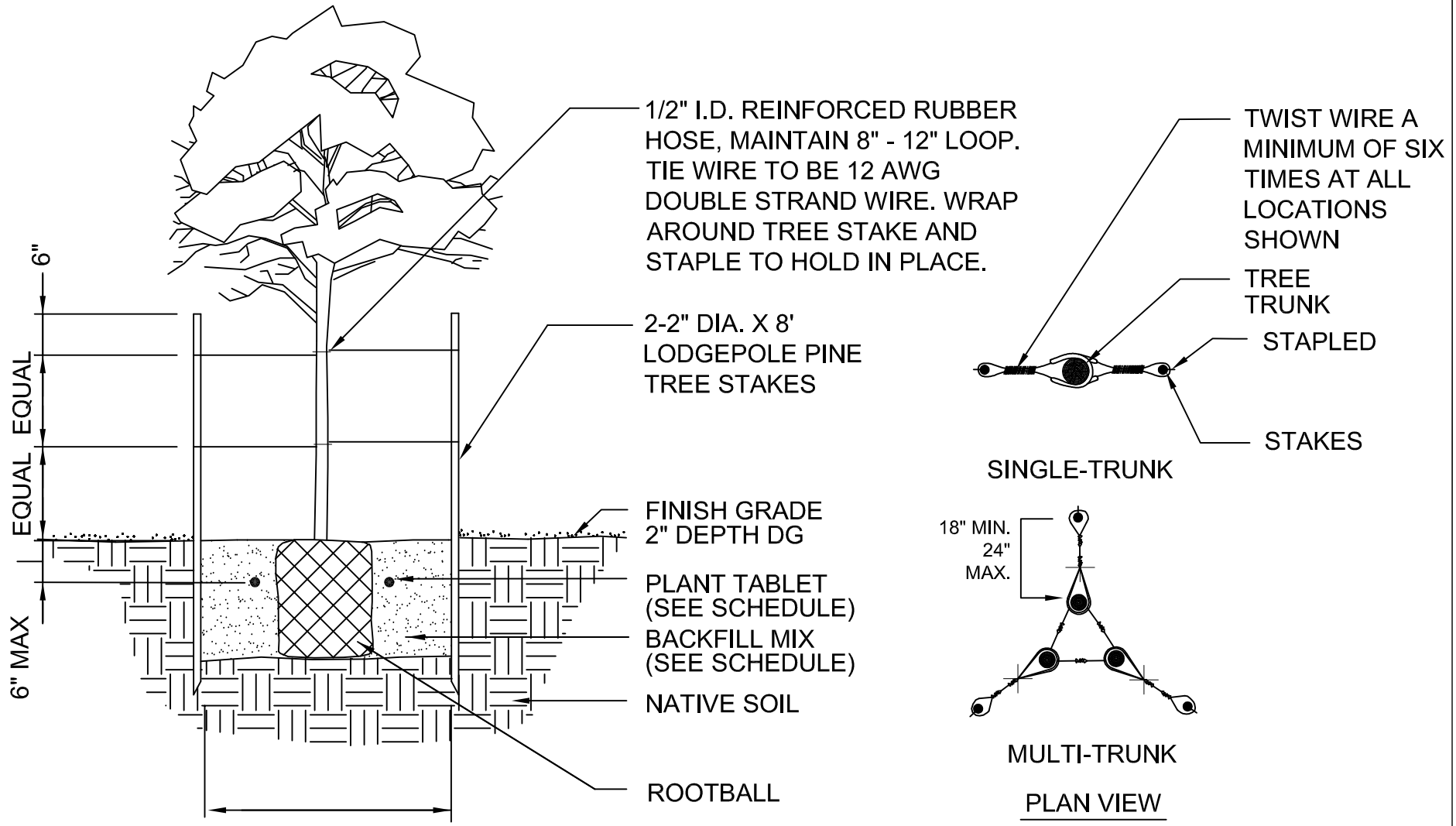

TREE STAKING NOTES-

1. STAKE TREES ONLY IF REQUIRED.
2. SET STAKES 6" MINIMUM IN UNDISTURBED SOIL.

* Latest Revision Febuary 2012

DETAIL NO. C- 801 NTS	CITY OF CHANDLER STANDARD DETAIL	**TREE PLANTING AND STAKING**	APPROVED: _____ CITY ENGINEER DATE: 02/09/12	DETAIL NO. C-801

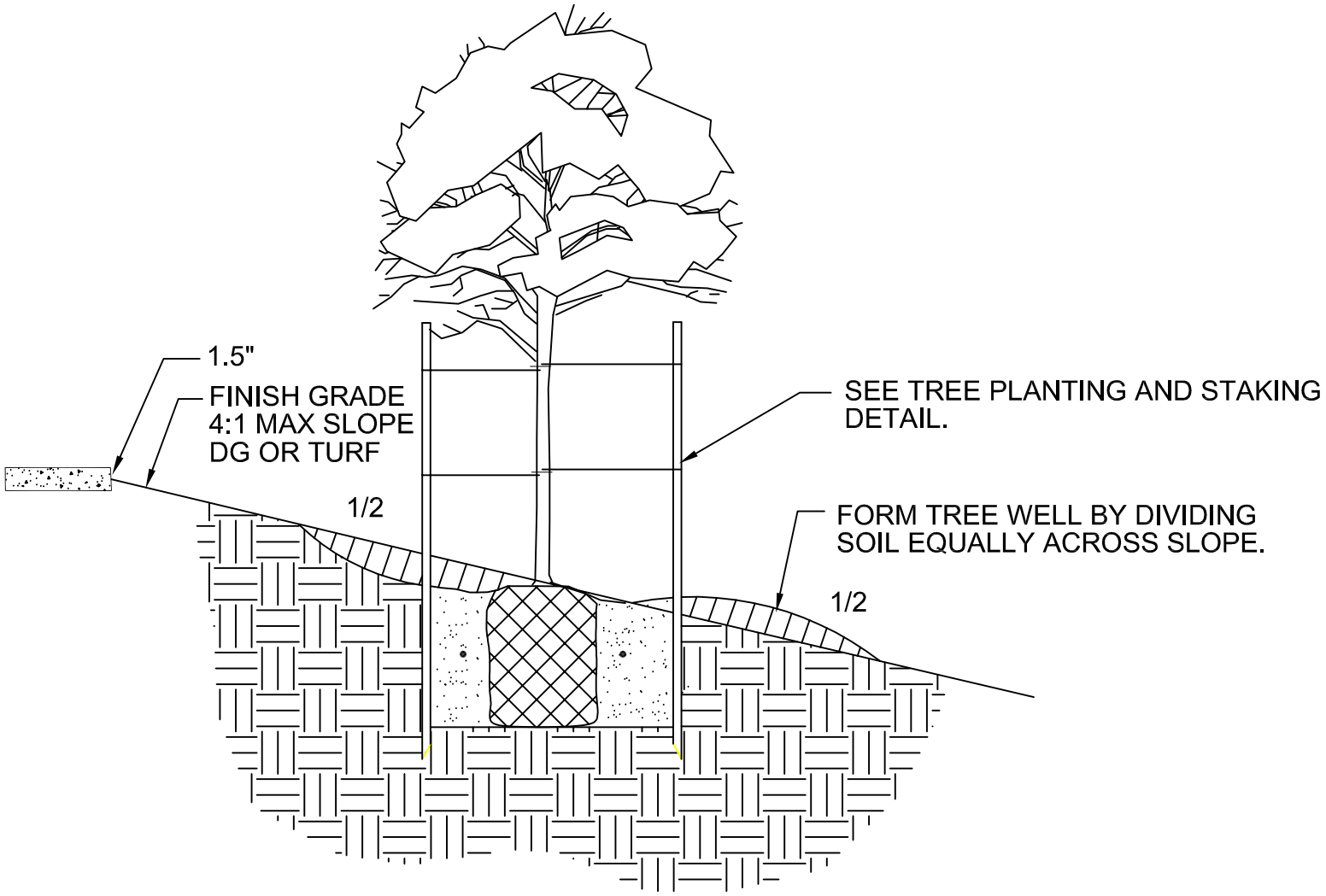

* Latest Revision Febuary 2012

DETAIL NO. C- 802 NTS	CITY OF CHANDLER STANDARD DETAIL	**TREE PLANTING SLOPE**	APPROVED: _____ CITY ENGINEER DATE: 02/09/12	DETAIL NO. C-802

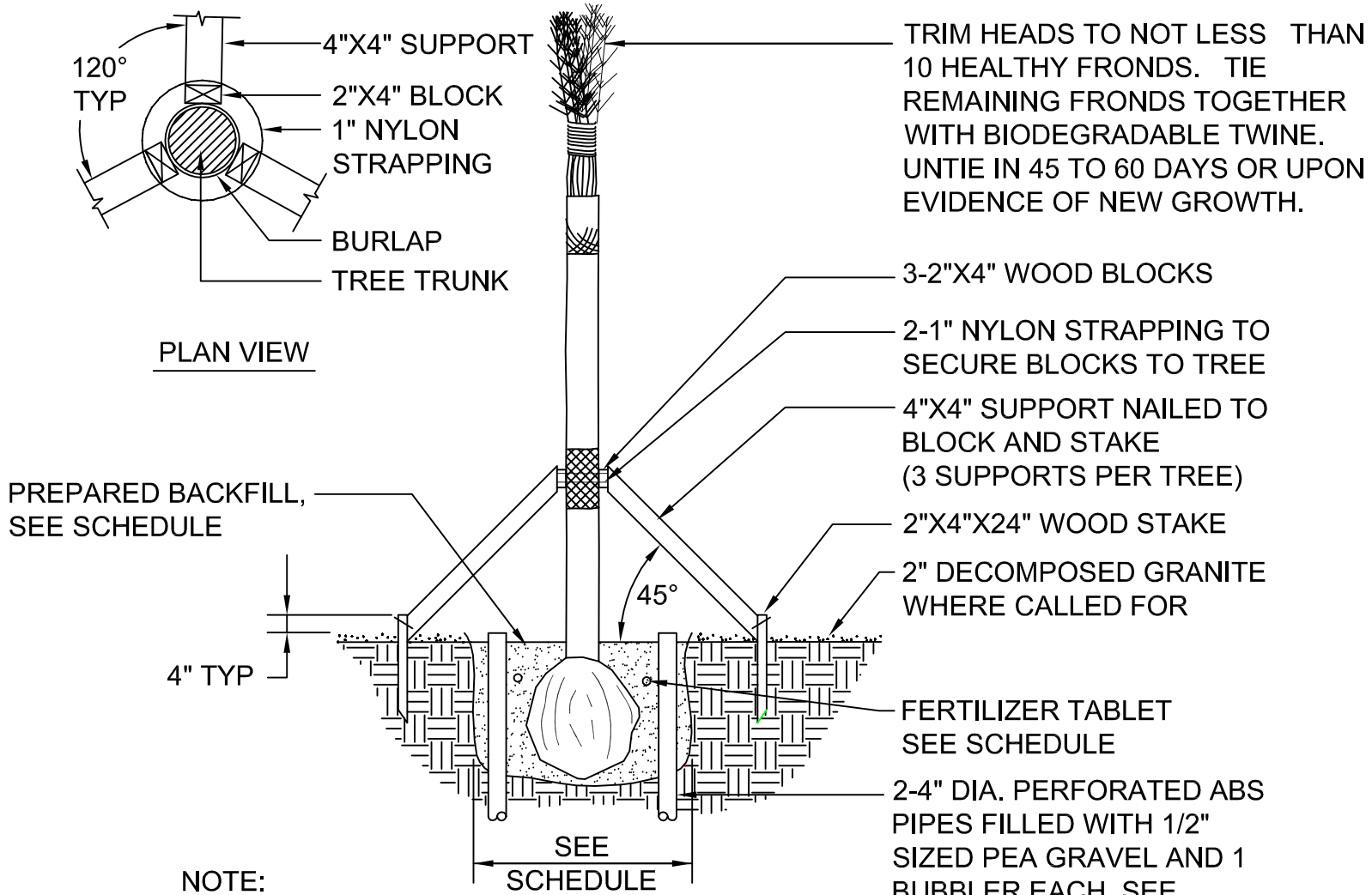

NOTE:
1. DO NOT BURY TRUNK - MAX 6" DEPTH LOWER THAN ORIGINAL PLANT DEPTH.

* Latest Revision Febuary 2012

DETAIL NO. C- 803 NTS	CITY OF CHANDLER STANDARD DETAIL	**PALM PLANTING AND BRACING**	APPROVED: _____ CITY ENGINEER DATE: 02/09/12	DETAIL NO. C-803

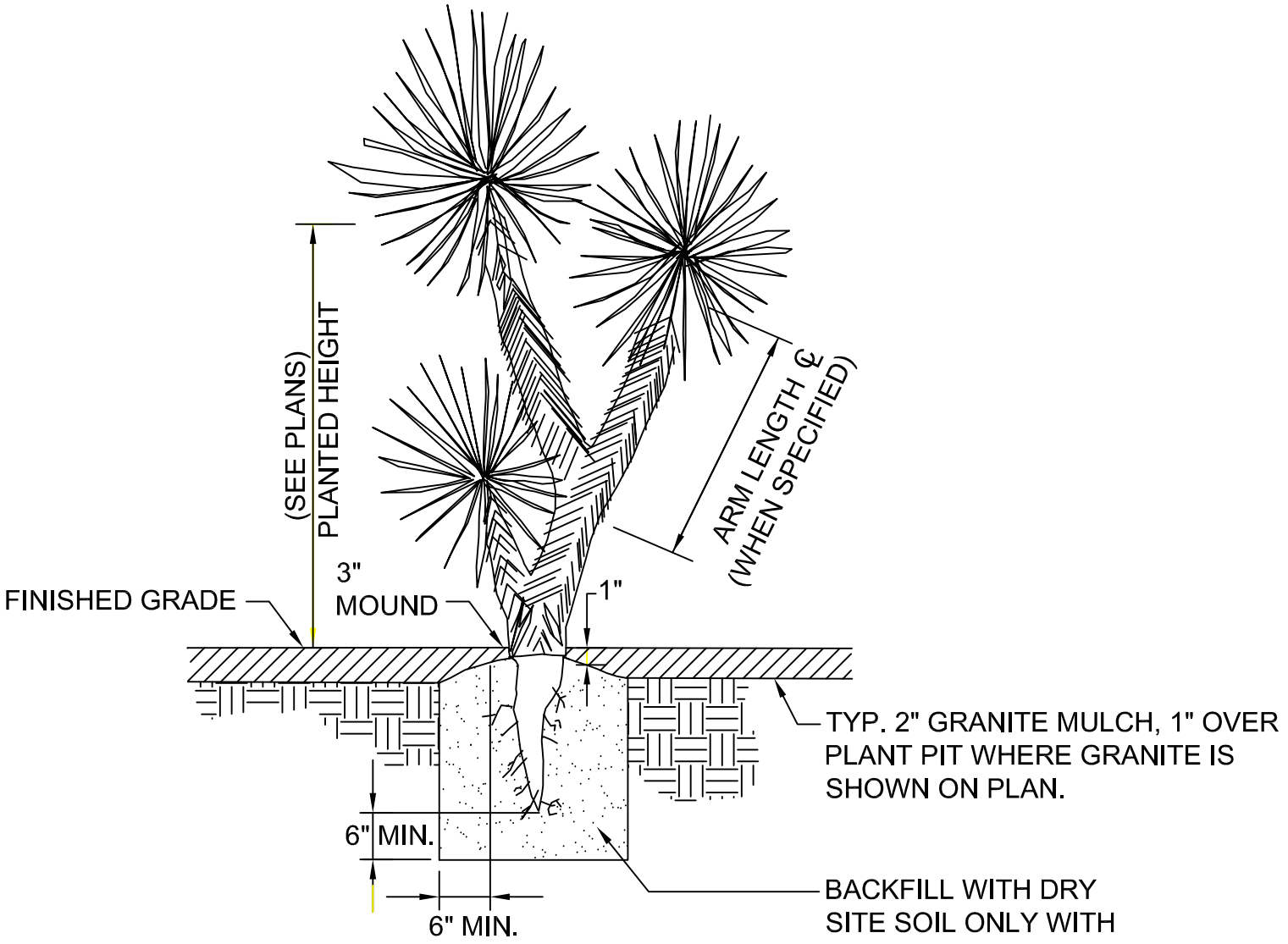

* Latest Revision Febuary 2012

DETAIL NO. C- 804 NTS	CITY OF CHANDLER STANDARD DETAIL	**CACTUS AND ACCENT PLANTING**	APPROVED: _____ CITY ENGINEER DATE: 02/09/12	DETAIL NO. C-804

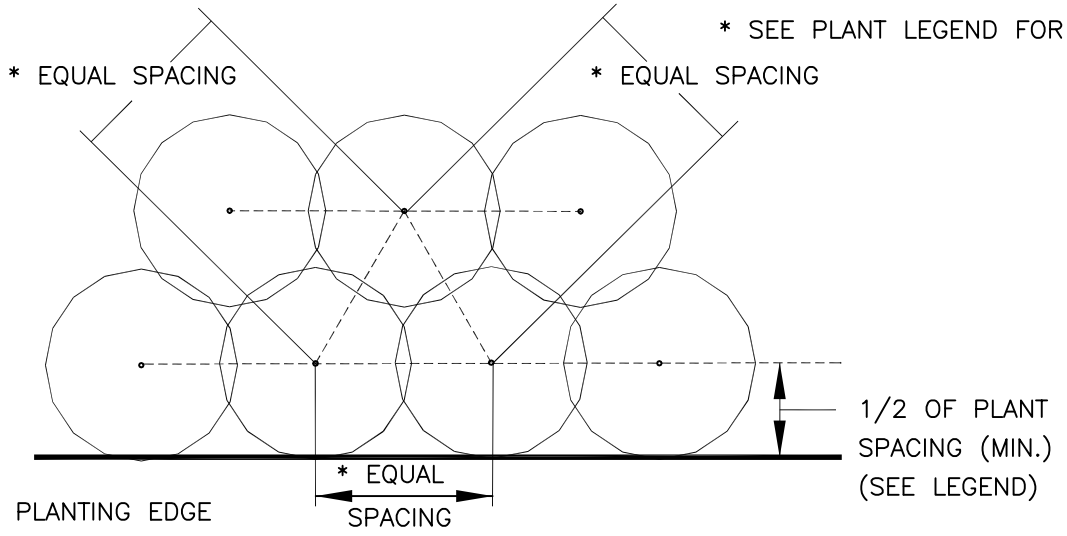

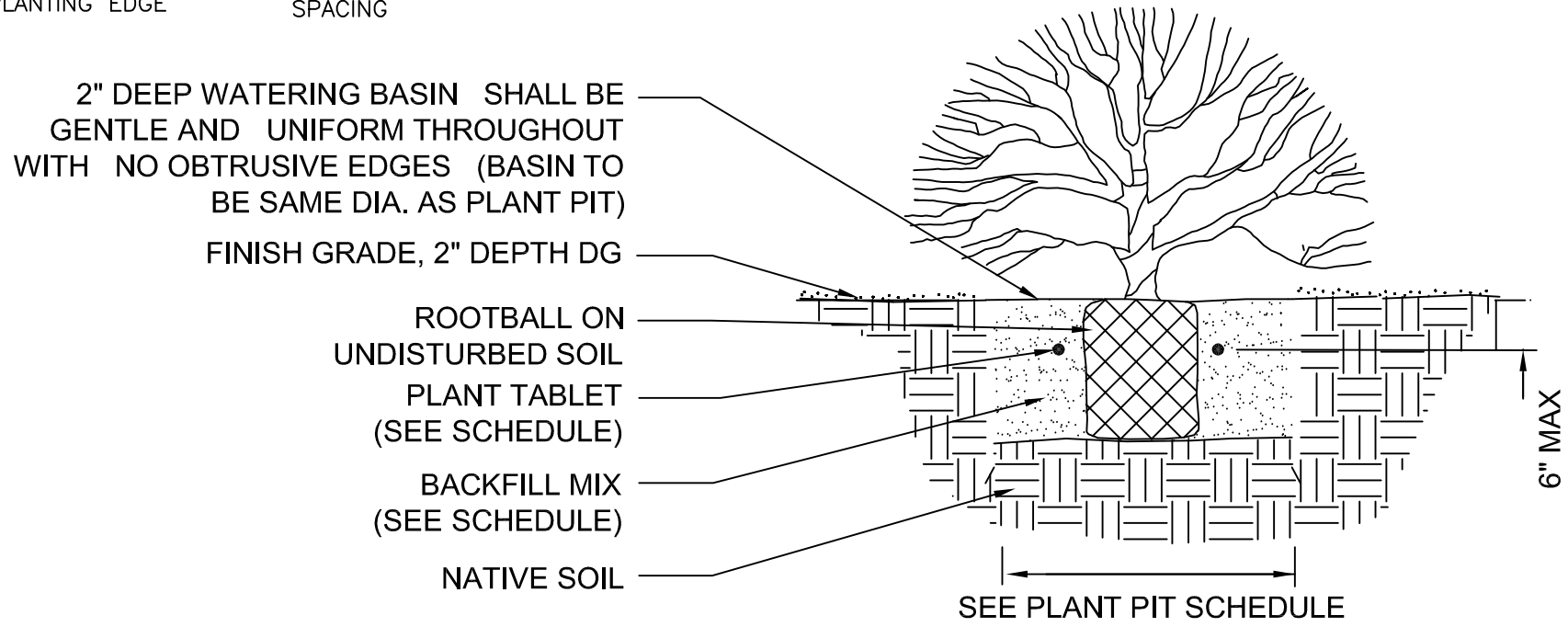

* Latest Revision Febuary 2012

DETAIL NO. C- 805 NTS	CITY OF CHANDLER STANDARD DETAIL	**SHRUB AND GROUND COVER PLANTING**	APPROVED: CITY ENGINEER DATE: 02/09/12	DETAIL NO. C-805

A - PLANTING PIT DIMENSIONS FOR TREES, SHRUBS, GROUNDCOVERS, CACTUS AND ACCENTS

PLANT SIZE	WIDTH	DEPTH
1 GALLON	2X's the width of the Root Ball	Same Depth as Root Ball
5 GALLON	2X's the width of the Root Ball	Same Depth as Root Ball
15 GALLON	3X's the width of the Root Ball	Same Depth as Root Ball
24" BOX	3X's the width of the Root Ball	Same Depth as Root Ball
30" BOX	3X's the width of the Root Ball	Same Depth as Root Ball
36" BOX	3X's the width of the Root Ball	Same Depth as Root Ball
48" BOX	3X's the width of the Root Ball	Same Depth as Root Ball

B - PLANT PIT DIMENSIONS FOR PALMS

TRUNK DIAMETER AT GRADE	MINIMUM DIAMETER PLANTING PIT	MINIMUM DEPTH PLANTING PIT
12 – 24"	48"	42"
25 – 32"	56"	44"
33 – 36"	60"	48"

C - PLANT TABLET SCHEDULE FOR TREES, SHRUBS, CACTUS, ACCENTS AND PALMS

TREES, SHRUBS, CACTUS AND ACCENTS

1 GALLON	1 TABLET
5 GALLON	2 TABLETS
15 GALLON	4 TABLETS
24" BOX	6 TABLETS
36" BOX	8 TABLETS
48" BOX	10 TABLETS

PALMS

1 TABLET PER 2 FEET OF TRUNK HEIGHT

D - BACKFILL MIX

TREES AND SHRUBS

3 PARTS EXCAVATED TOPSOIL
1 PART SAND
PLANT TABLETS PER SCHEDULE C

CACTUS AND ACCENTS

1 PART EXCAVATED TOPSOIL
1 PART SAND
PLANT TABLETS PER SCHEDULE C

PALMS

PALM TREE BACKFILL SHALL BE 100% SAND.
PLANT TABLETS PER SCHEDULE C

* Latest Revision Febuary 2012

DETAIL NO. C- 806 NTS	CITY OF CHANDLER STANDARD DETAIL	PLANT PIT SCHEDULE	APPROVED: _____ CITY ENGINEER DATE: 02/09/12	DETAIL NO. C-806

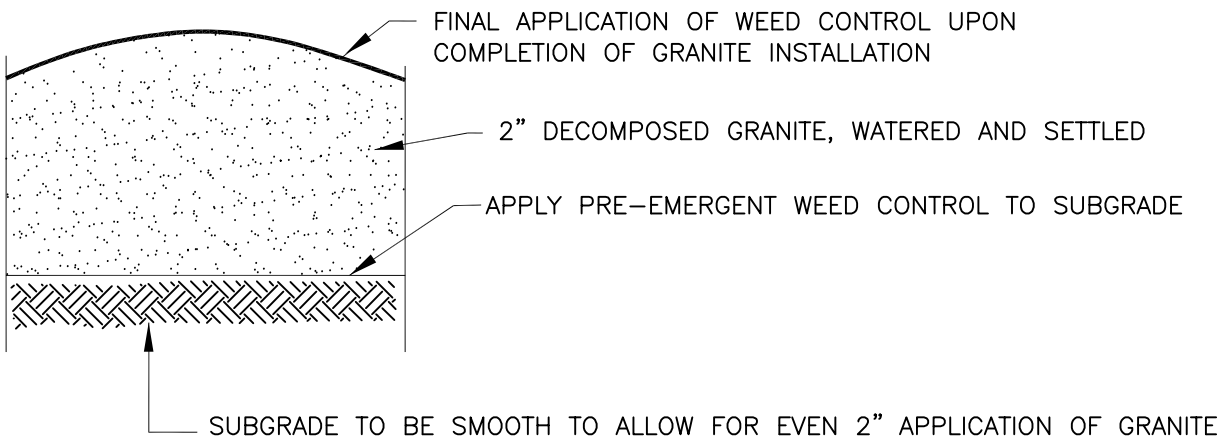

(A) GRANITE DETAIL

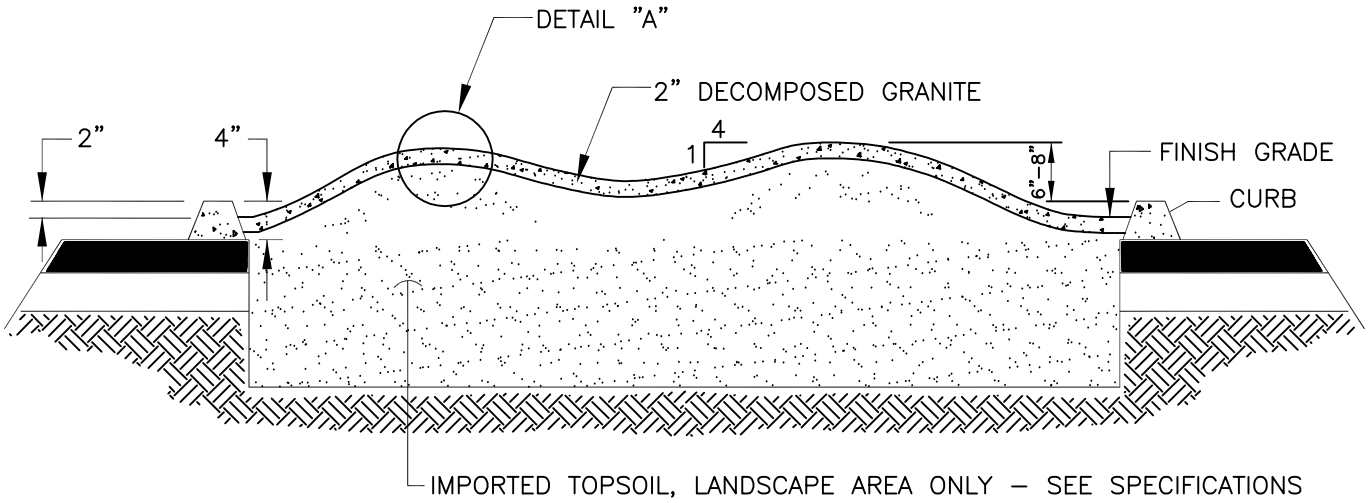

* Latest Revision Febuary 2012

DETAIL NO. C- 807 NTS	CITY OF CHANDLER STANDARD DETAIL	MEDIAN	APPROVED: CITY ENGINEER DATE: 02/09/12	DETAIL NO. C-807

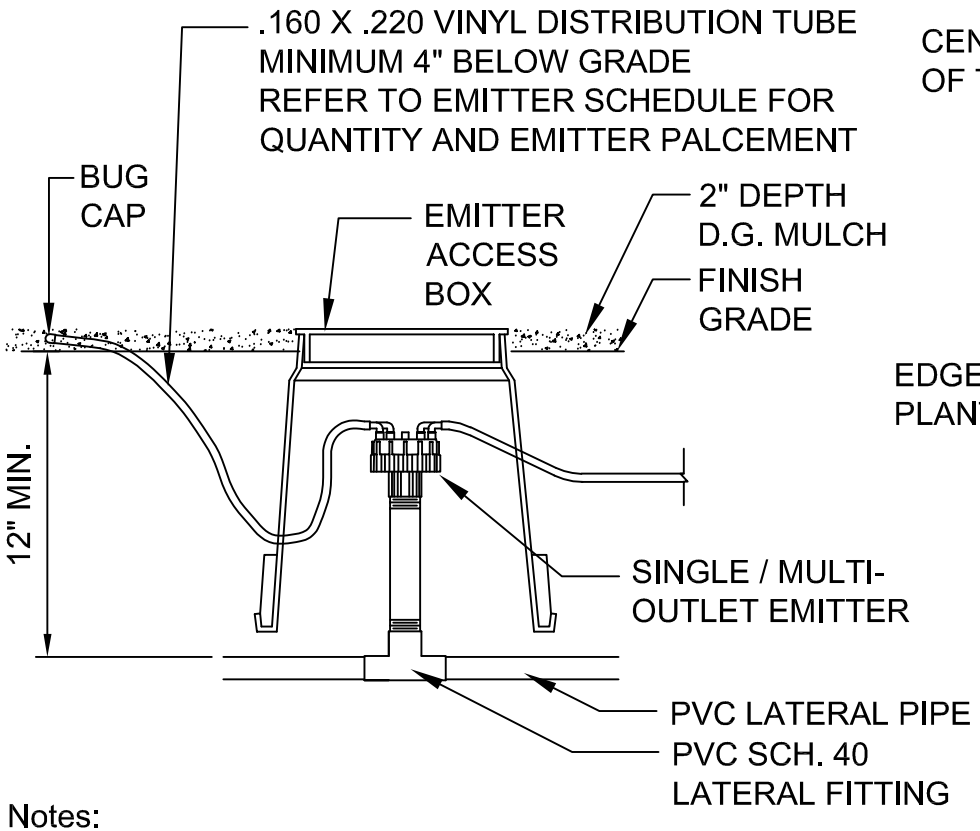

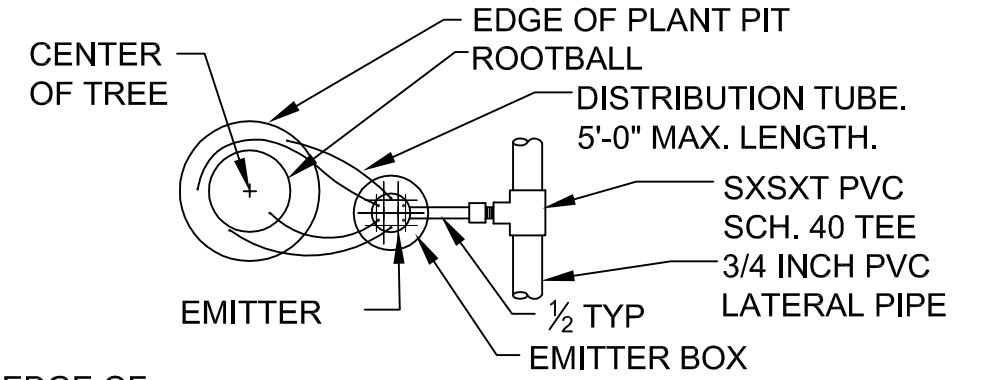

PLAN VIEW - TREE

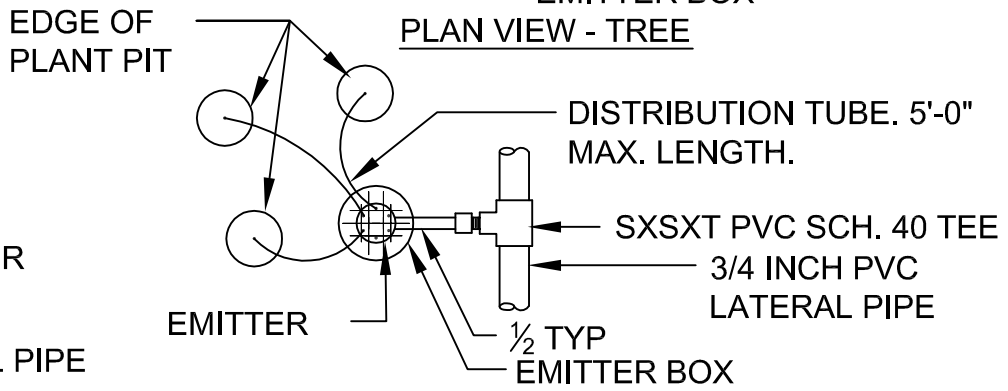

PLAN VIEW - SHRUB

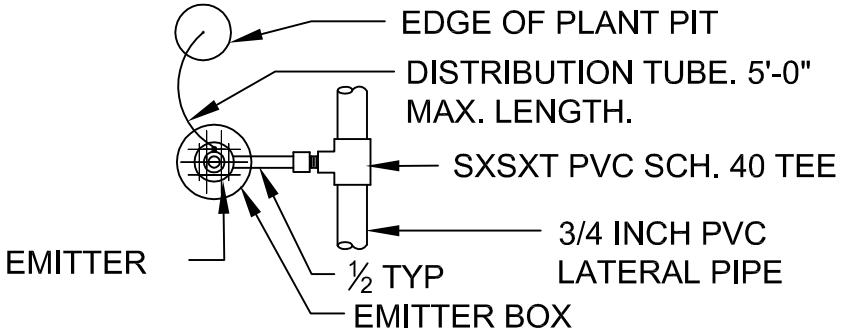

PLAN VIEW - SINGLE OUTLET

Notes:

1. Emission points shall be located uphill of plant centerline and shall deliver water directly to root ball (typ.)
2. At least one emitter tube outlet shall be located within 4" of plant centerline.
3. All basins 2" deep. Basins to be same level as plant pit.
4. Place emitter so that top edge of emitter is visible above finished grade
5. Number of openings and emitter tubes required per plant is based on plant size. See Emitter Schedule.

* Latest Revision Febuary 2012

DETAIL NO. C- 808 NTS	CITY OF CHANDLER STANDARD DETAIL	**EMITTER ACCESS BOX AND EMITTER LAYOUT**	APPROVED: CITY ENGINEER DATE: 02/09/12	DETAIL NO. C-808

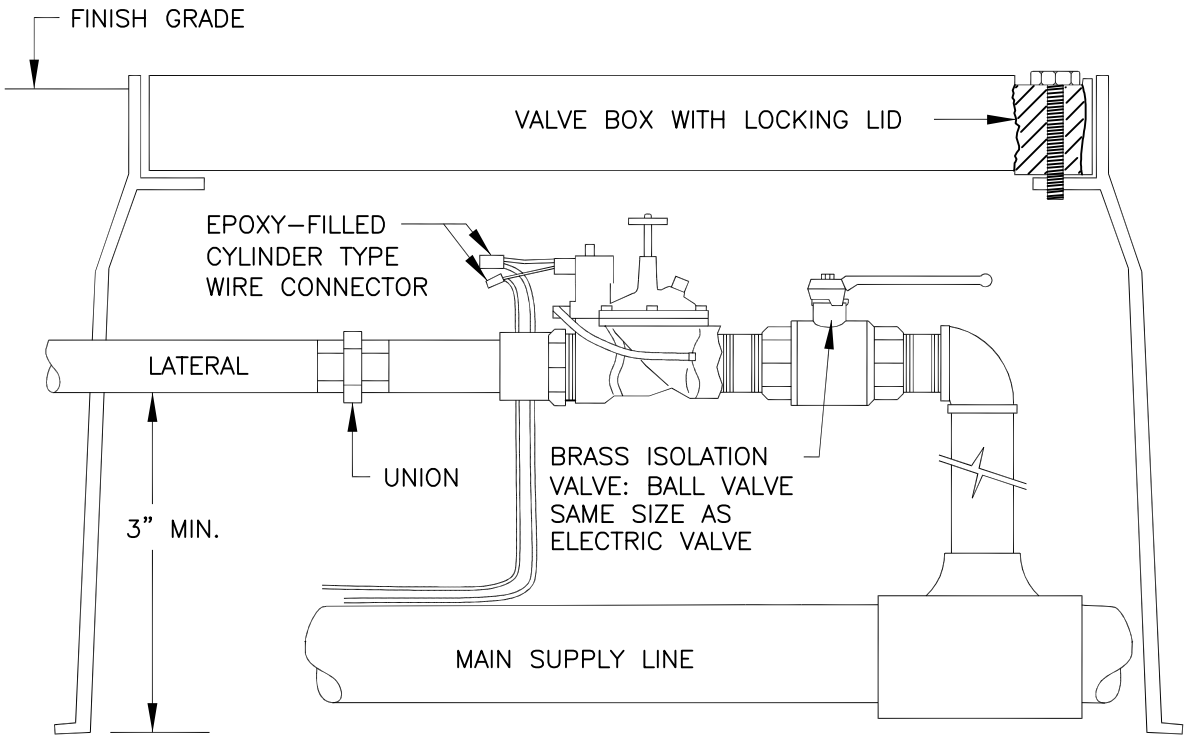

NOTES:

1. PROVIDE EXPANSION COILS AT EACH WIRE CONNECTION.
2. QUICK COUPLERS SHALL BE IN SEPERATE VALVE BOXES.
3. PEA GRAVEL SHALL BE 4" TO 6" IN DEPTH UNDER VALVE BOX.
4. ALL PVC THREADED FITTINGS SHALL BE SCHEDULE 80.

* Latest Revision Febuary 2012

DETAIL NO. C- 809 NTS	CITY OF CHANDLER STANDARD DETAIL	**REMOTE CONTROL ELECTRIC VALVE TURF**	APPROVED: _____ CITY ENGINEER DATE: 02/09/12	DETAIL NO. C-809

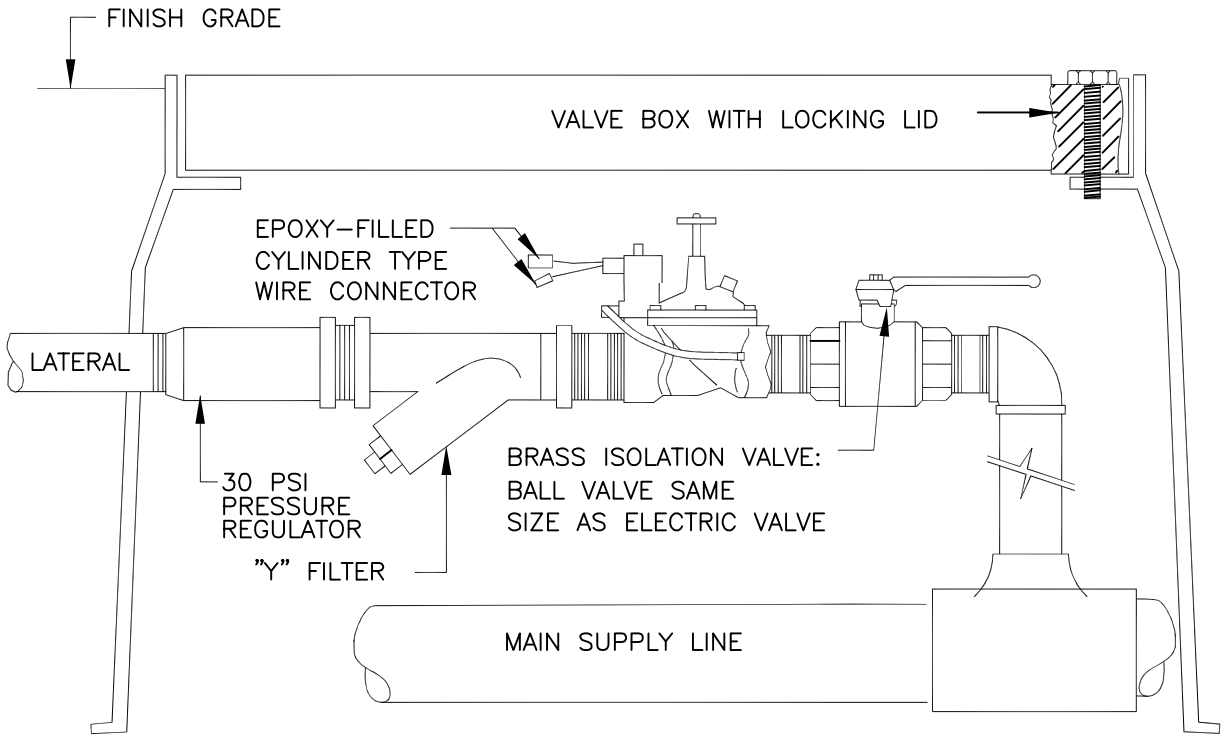

NOTES:

1. PROVIDE EXPANSION COILS AT EACH WIRE CONNECTION.
2. QUICK COUPLERS SHALL BE IN SEPERATE VALVE BOXES.
3. PEA GRAVEL SHALL BE 4" TO 6" IN DEPTH UNDER VALVE BOX.

* Latest Revision Febuary 2012

DETAIL NO. C- 810 NTS	CITY OF CHANDLER STANDARD DETAIL	**REMOTE CONTROL ELECTRIC VALVE DRIP**	APPROVED: CITY ENGINEER DATE: 02/09/12	DETAIL NO. C-810

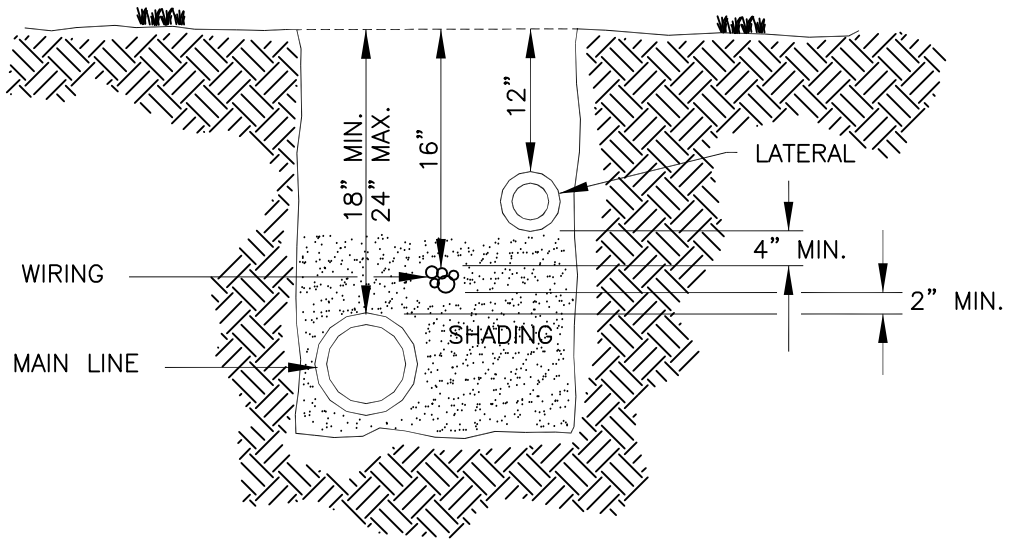

NOTES:

1. ALL PIPE INSTALLATION, TRENCH EXCAVATION, BACKFILLING AND COMPACTION SHALL CONFORM WITH MAG SEC. 440 AND 601.
2. TAPE AND BUNDLE WIRING AT 10 FEET INTERVALS.
3. SHADING SHALL BE DONE WITH NATIVE SOIL.
4. DEPTH DIMENSION MAY VARY WHERE INDICATED ON IRRIGATION PLAN.
5. ALL PIPE INSTALLED UNDER PAVED SURFACES SHALL BE PLACED IN PVC SLEEVING, 2 TIMES THE NOMINAL SIZE OF THE PIPE*.
   *ALL IRRIGATION WORK WITHIN THE PUBLIC R.O.W. REQUIRES A SEPARATE PERMIT.

* Latest Revision Febuary 2012

DETAIL NO. C- 811 NTS	CITY OF CHANDLER STANDARD DETAIL	**IRRIGATION TRENCH**	APPROVED: _____ CITY ENGINEER DATE: 02/09/12	DETAIL NO. C-811

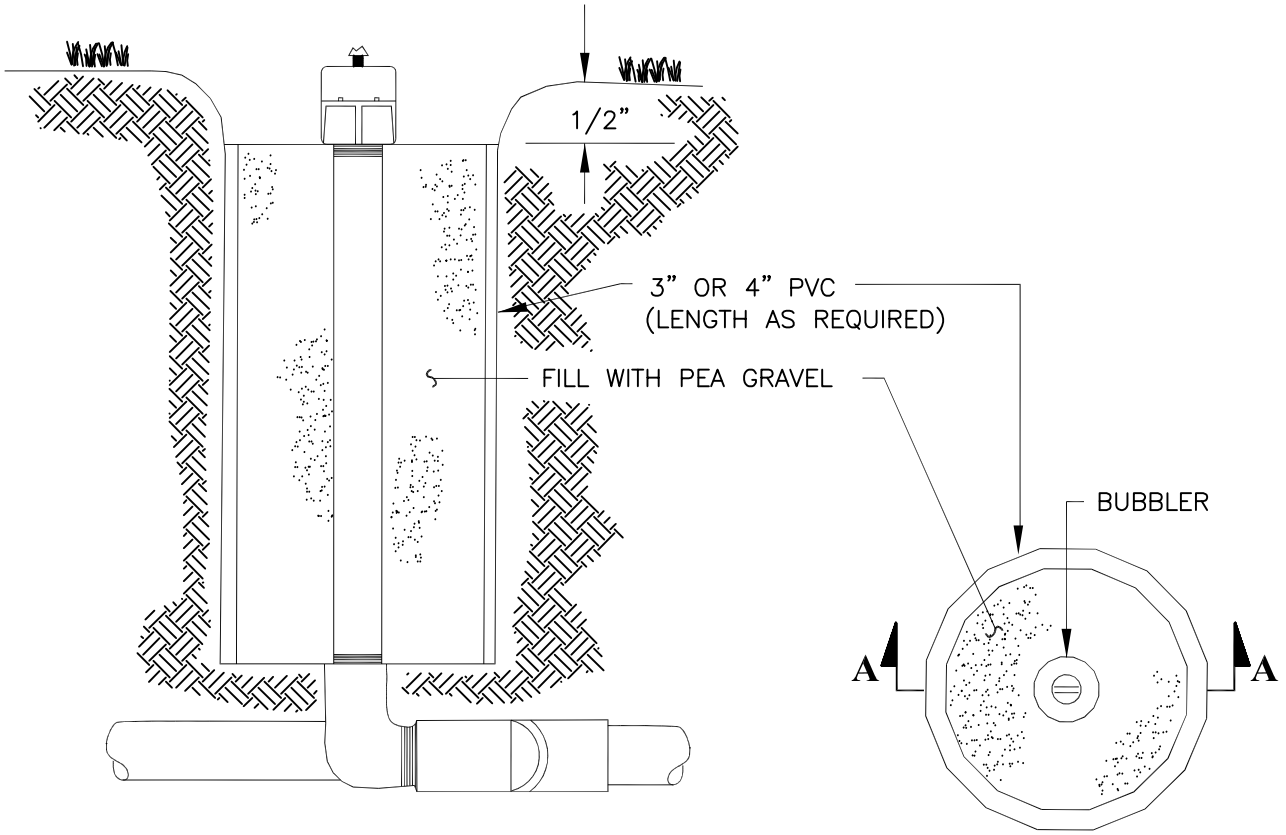

SECTION A - A

PLAN

* Latest Revision Febuary 2012

DETAIL NO. C- 812 NTS	CITY OF CHANDLER STANDARD DETAIL	**BUBBLER**	APPROVED: CITY ENGINEER DATE: 02/09/12	DETAIL NO. C-812

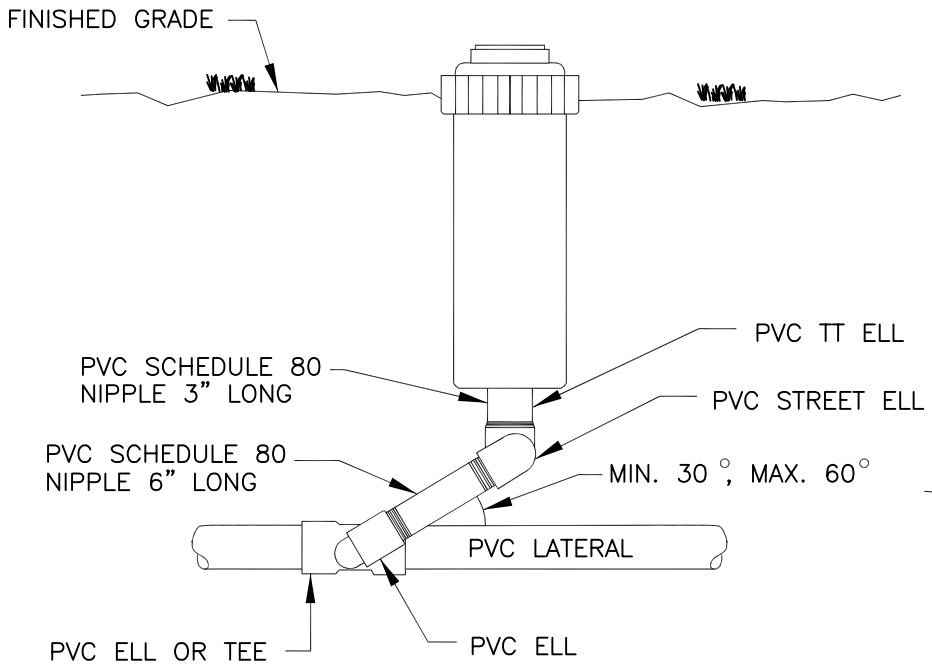

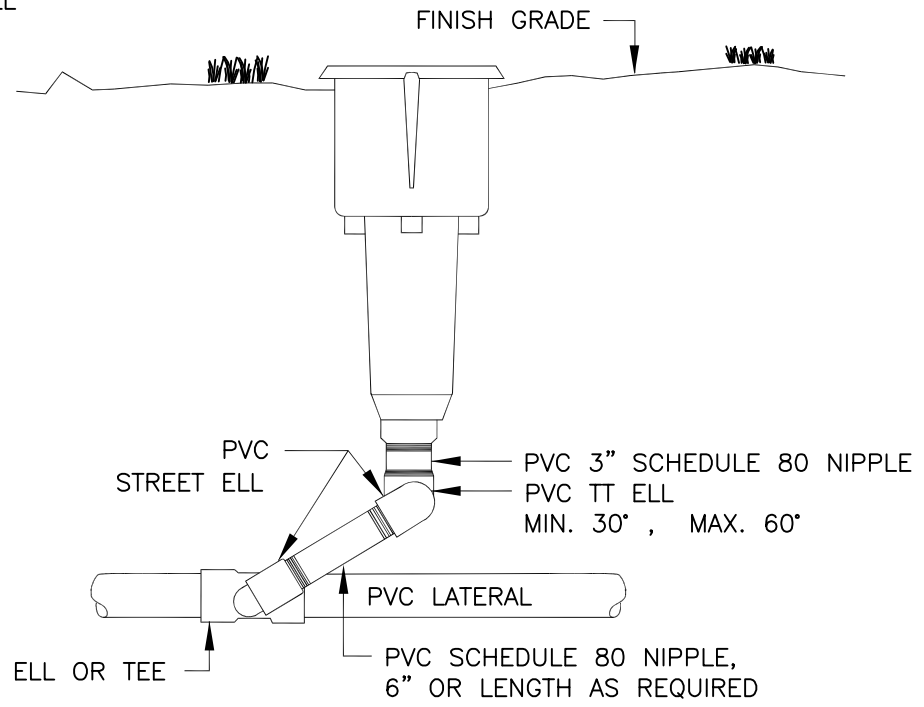

NOTES:

1. INSTALL SPRINKLER 1" ABOVE GRADE UNTIL TURF IS ESTABLISHED THEN ADJUST FLUSH TO GRADE.
2. ALL FITTINGS TO BE SCHEDULE 80.

* Latest Revision Febuary 2012

DETAIL NO. C- 813 NTS	CITY OF CHANDLER STANDARD DETAIL	**GEAR-DRIVEN POP-UP ROTOR**	APPROVED: CITY ENGINEER DATE: 02/09/12	DETAIL NO. C-813

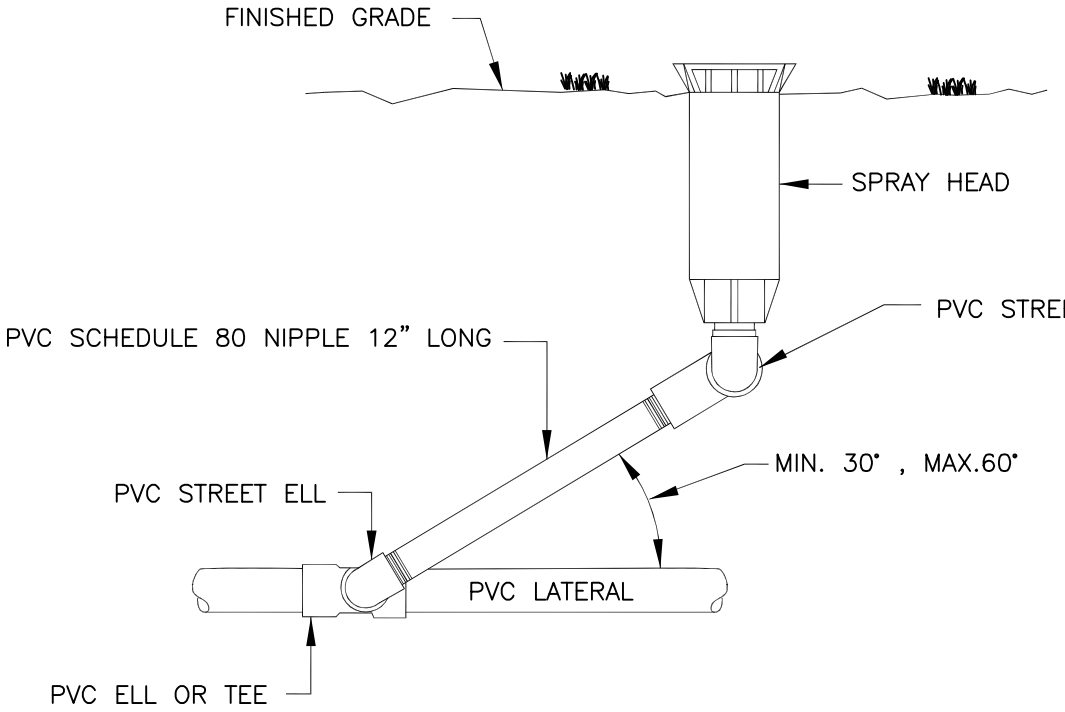

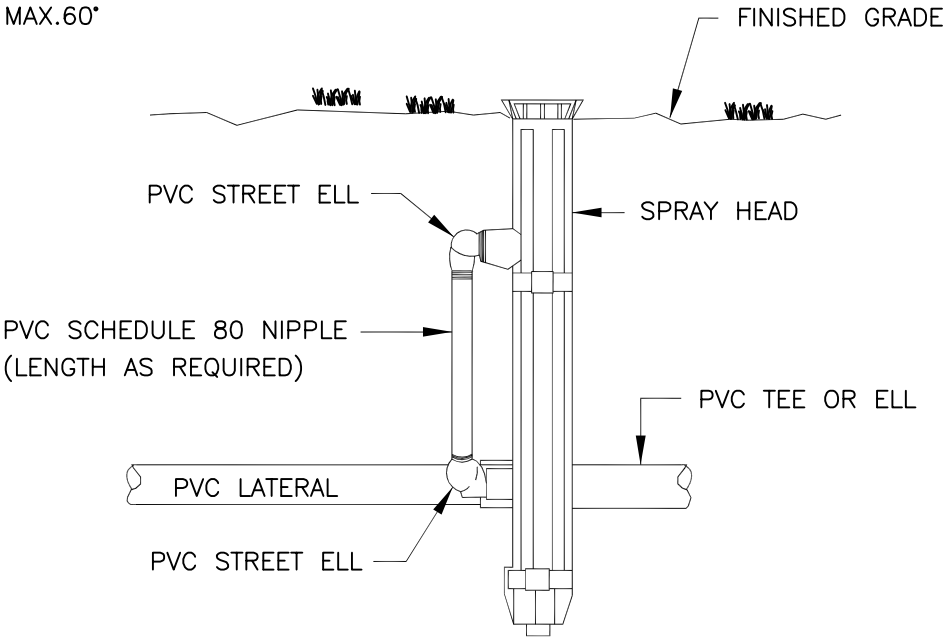

NOTE:

ALL FITTINGS TO BE SCHEDULE 80.

* Latest Revision Febuary 2012

DETAIL NO. C- 814 NTS	CITY OF CHANDLER STANDARD DETAIL	**POP-UP SPRAY HEAD**	APPROVED: CITY ENGINEER DATE: 02/09/12	DETAIL NO. C-814

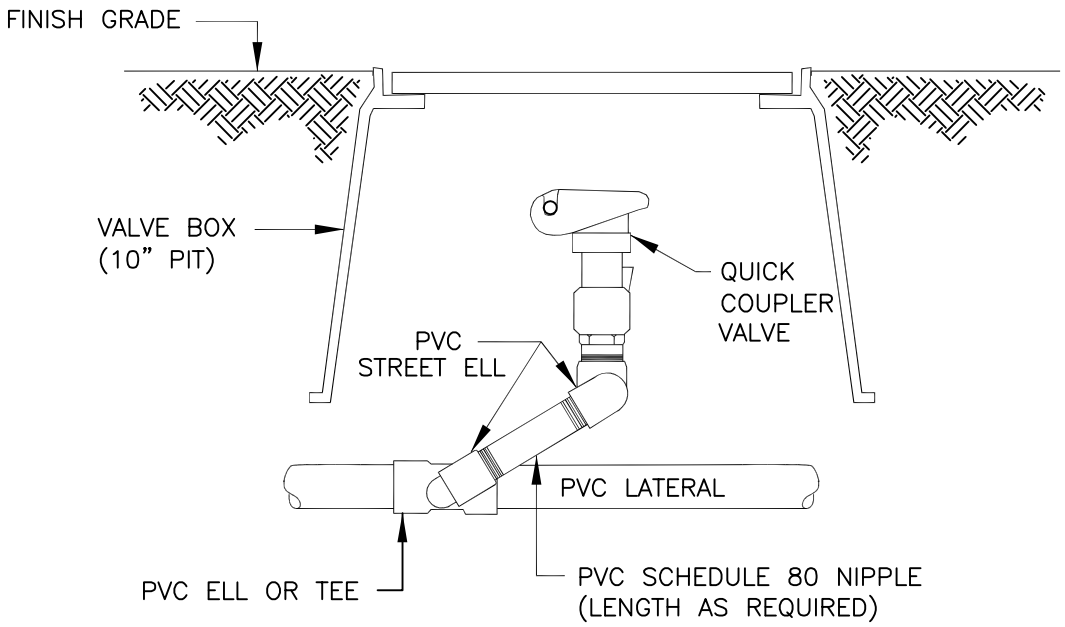

NOTES:

1. EACH QUICK COUPLER SHALL BE IN A SEPERATE VALVE BOX.
2. PROVIDE ONE (1) QUICK COUPLER KEY FOR EACH QUICK COUPLER VALVE.
3. PLACE 4" TO 6" DEPTH PEA GRAVEL UNDER VALVE BOX.
4. QUICK COUPLER SHALL HAVE LOCKING RUBBER COVER.

* Latest Revision Febuary 2012

DETAIL NO. C- 815 NTS	CITY OF CHANDLER STANDARD DETAIL	**QUICK COUPLER**	APPROVED: _____ CITY ENGINEER DATE: 02/09/12	DETAIL NO. C-815

IRRIGATION LEGEND

SYMBOL	MFG. AND DESCRIPTION	QUANTITY

FRICTION LOSS

PRESSURE AT SOURCE _____ P.S.I.

PRESSURE VERIFIED WITH CITY _____ P.S.I.

FRICTION LOSS THROUGH: (TO FARTHEST HEAD)

WATER METER _____ P.S.I.

VACUUM BREAKER _____ P.S.I.

MAIN LINE PIPE _____ P.S.I.

VALVE _____ P.S.I.

LATERAL LINE PIPE _____ P.S.I.

TOTAL FRICTION LOSS _____ P.S.I.

REQUIRED PRESSURE AT HEAD _____ P.S.I.

(TOTAL FRICTION LOSS)+(REQUIRED P.S.I. AT HEAD) = PRESSURE REQUIRED AT SOURCE _____ P.S.I.

CALCULATIONS PERFORMED BY _____ _____

SIGNED DATE

* Latest Revision Febuary 2012

DETAIL NO. C- 816 NTS	CITY OF CHANDLER STANDARD DETAIL	TYPICAL IRRIGATION LEGEND AND INFORMATION	APPROVED: _____ CITY ENGINEER DATE: 02/09/12	DETAIL NO. C-816

A - EMITTER SCHEDULE FOR TREES, SHRUBS, GROUNDCOVERS AND ACCENTS

PLANT SIZE	TYPE OF EMITTER	NUMBER OF EMITTERS	GALLONS PER HOUR PER PLANT
1 GALLON	SINGLE OR MULTI	1	.6 or 1
5 GALLON	SINGLE OR MULTI	1	.6 or 1
15 GALLON	MULTI	4	4
24" BOX	MULTI	4	4
30" BOX	MULTI	6	6
36" BOX	MULTI	6	6
48" BOX	MULTI	6	6

B - BUBBLER SCHEDULE FOR PALMS

TRUNK DIAMETER AT GRADE	NUMBER OF BUBBLERS
12 – 24"	2
25 – 32"	2
33 – 36"	2

C - CACTUS

DO NOT PROVIDE IRRIGATION TO CACTUS

NOTES:

1. REFER TO EMITTER AND BUBBLEER DETAILS FOR SPECIFICATIONS AND LAYOUT INFORMATION.
2. ADJUST IRRIGATION OPERATING TIMES TO ACCOMMODATE PLANT MATURITY, SOIL TYPE, PLANT EXPOSURE AND SEASONAL REQUIREMENTS.

* Latest Revision Febuary 2012

DETAIL NO. C- 817 NTS	CITY OF CHANDLER STANDARD DETAIL	EMITTER-BUBBLER SCHEDULE	APPROVED: CITY ENGINEER DATE: 02/09/12	DETAIL NO. C-817