Chandler • Arizona
Where Values Make The Difference

L.
NOV 07 2012
Chandler
All-America City
2010

MEMORANDUM **Transportation & Development – PZ Memo No. 12-100**

DATE: NOVEMBER 1, 2012

TO: PLANNING AND ZONING COMMISSION

THRU: R.J. ZEDER, TRANSPORTATION & DEVELOPMENT DIRECTOR
JEFF KURTZ, PLANNING ADMINISTRATOR
KEVIN MAYO, PLANNING MANAGER KM

FROM: JESSICA SARKISSIAN, CITY PLANNER

SUBJECT: ZUP12-0028 PRESIDIO WIRELESS FACILITY

Request: Use Permit approval to install a 65'-high (62' top of antennas) monopalm wireless communication facility.

Location: Southwest of the Southwest corner of Dobson and Pecos Roads within the Presidio office complex.

Applicant: Clear Blue Services (for AT&T Mobility)

Project Info: Planned Area Development (PAD) for medical/office

RECOMMENDATION

Staff, finding consistency with the General Plan, recommends approval subject to conditions.

BACKGROUND

The application requests Use Permit approval to install a new 65' tall monopalm (62' top of antennas) wireless communications facility to be located within a 24' x 30' lease area within the Presidio Office Complex on Dobson Road just south of Pecos Road. The Zoning Code requires a Use Permit for wireless communication facilities in non-industrial zoning districts that do not utilize existing poles or towers. This request is for a new facility within an existing Planned Area Development. The approximately 4.6-acre office complex site is bordered to the north, south, and west by commercial and office Planned Area Developments. To the east across Dobson Road is the Silverton Ranch residential subdivision. The nearest residentially zoned property is over 660' to the west, 715' to the east, 760' to the south and 940' to the north. The office complex contains four (4) buildings and a large permanent parking lot with covered and uncovered spaces spread throughout the complex.

The monopalm is proposed to be located on the southwest corner of the complex within the parking lot. A monopalm is a cell tower disguised as a palm tree. The monopalm will be setback approximately 565' from Dobson Road ROW. One parking space will be removed to accommodate the new facility. Parking for the facility will be located within the existing parking lot for the complex. The complex has many palm trees on the site at the main building entrances and entrances into the complex. Elevations of the proposed monopalm are among the memo attachments.

Within the immediate area there are no suitable alternatives for co-location on existing poles or towers. According to the information provided by the applicant and AT&T as required by the Zoning Code, there are only three (3) verticalities of a height similar to or greater than the proposed monopalm within one (1) mile. They are the T-Mobile monopalm directly to the south, the Verizon Wireless tower a mile south on Germann Road and the monopalm over a mile south also along Germann. The applicant has analyzed these co-location possibilities and found them implausible because one is located outside the needed coverage area to fill in their service gaps and the two monopalms to the south do not offer the ability to collocate on their existing design. An inventory of these verticalities provided by the applicant is among the attachments.

DISCUSSION

Staff finds the proposed location to be appropriate for a wireless facility in the form of a 65'-high monopalm (62' to top of antennas). The location is within an existing medical/ office complex and over 660' from residential properties and is compatible with surrounding land uses. The existing surrounding complex and church to the south all have several existing date palm trees which further blend the monopalm into the surroundings of the immediate area and precludes the need for additional live trees adjacent to the monopalm. Also, since the date palm trees are used to highlight major complex entrance features and building entrances, it would not be appropriate to create a grove effect behind the buildings in the corner.

Staff recommends that the monopalm fronds be required to extend beyond the antennas and additional opaque screening be added to the wrought iron fencing surrounding the ground equipment to ensure adequate camouflage. The applicant has brought the antenna arrays as close to the pole as possible and any needed extension of frond length is not anticipated to present an unnatural appearance.

PUBLIC / NEIGHBORHOOD NOTIFICATION

- This request was noticed according to the provisions of the City of Chandler Zoning Code.
- A neighborhood meeting was held on October 15,2012. No citizens were in attendance. One citizen contacted Staff about this project and was not opposed.
- At the time of this memo, Staff is not aware of any opposition to this request.

RECOMMENDED ACTION

Staff, upon finding consistency with the General Plan, recommends approval of ZUP12-0028 PRESIDIO WIRELESS FACILITY subject to the following conditions:

1. Development shall be in substantial conformance with the approved exhibits except as modified by conditions herein. Expansion or modification of the use beyond the approved exhibits shall require a new Use Permit application and approval.

2. The monopalm shall provide long enough palm fronds so as to extend beyond the antennas to provide adequate camouflage.

3. Further screening shall be required along with the wrought iron fencing to visually conceal the equipment inside.

PROPOSED MOTION

Move to recommend approval of ZUP12-0028 PRESIDIO WIRELESS FACILITY subject to the conditions recommended by Staff.

Attachments

1. Vicinity Map
2. Site Plans and Elevations
3. Narrative
4. Map of Verticalities within 1 Mile

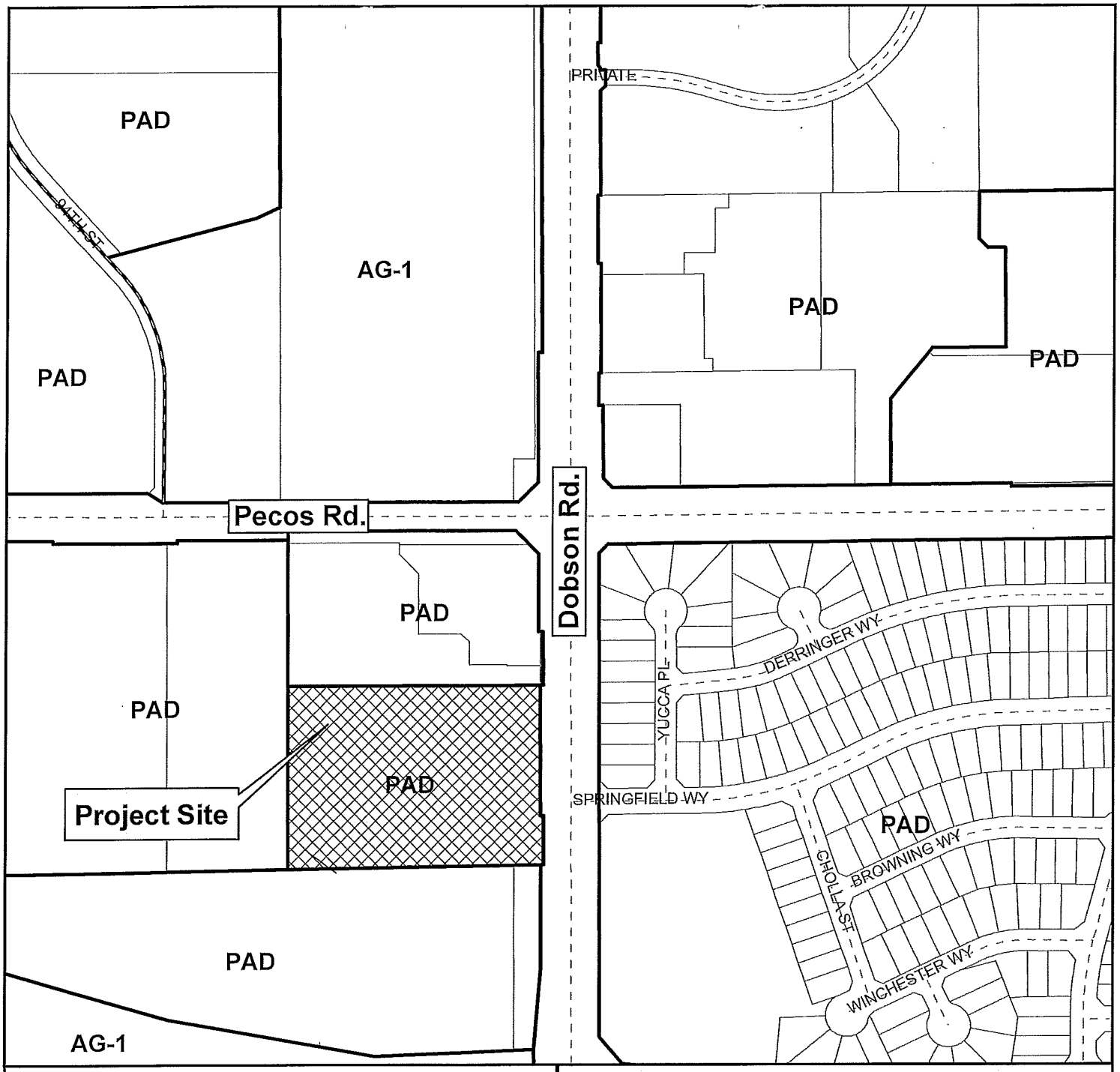

Vicinity Map

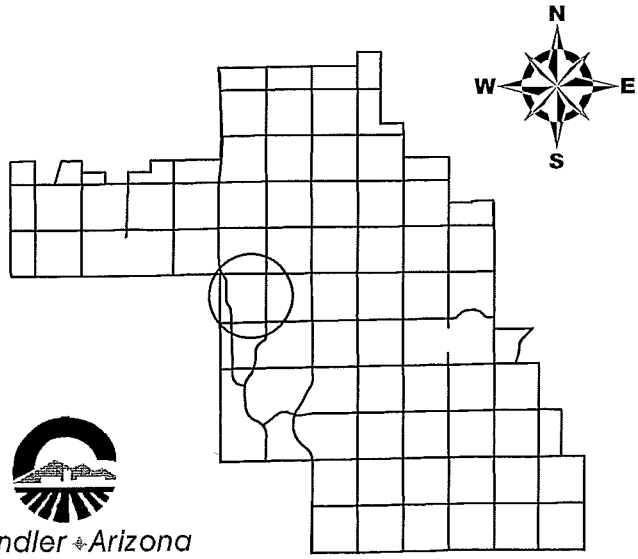

ZUP12-0028

Presidio Wireless Facility

Chandler Arizona
Where Values Make The Difference

CITY OF CHANDLER 9/10/2012

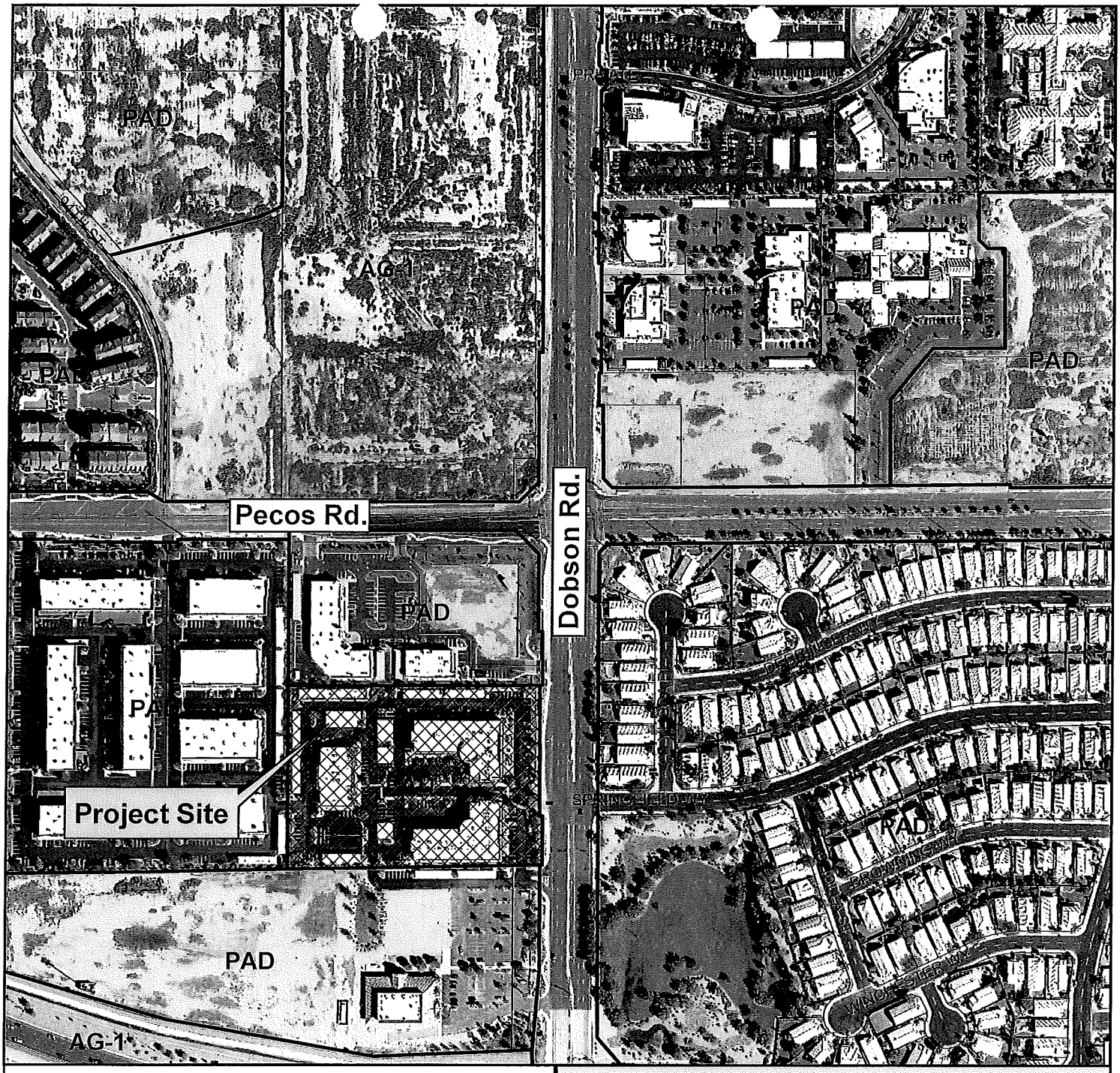

Vicinity Map

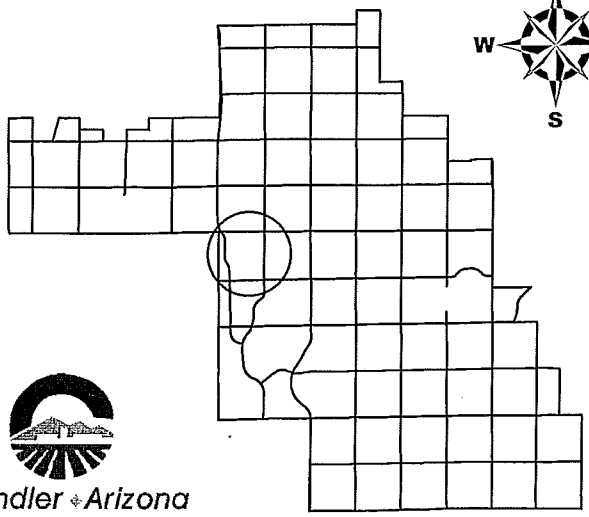

Chandler Arizona
Where Values Make The Difference

ZUP12-0028

Presidio Wireless Facility

CITY OF CHANDLER 9/10/2012

The Presidio Center-W550

Narrative

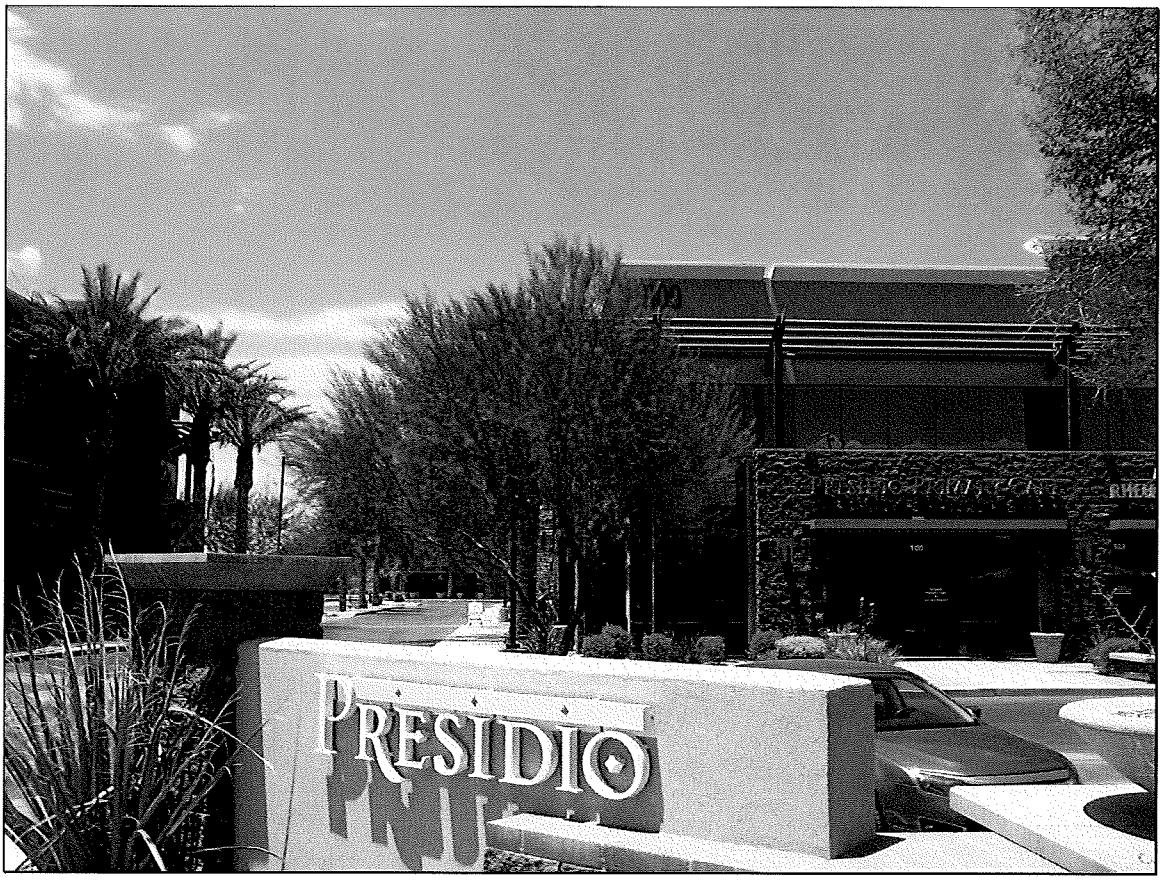

Case: ZUP12-0028

W550- NARRATIVE REPORT

REQUEST: Approve a Use Permit for the installation of a Personal Wireless Communication Facility

PROPOSAL: Installation of a Monopalm along with Equipment Facilities

LOCATION: 1130 S. Dobson Rd, Chandler, AZ 85224

SIZE: 24' x 30' lease area for a 65' Monopalm

APPLICANT: Clear Blue Services for AT&T – (W550)

CONTACT PERSON: Dayna Bedney, 602.426.9500 Ext. 107, daynabedney@clearblueservices.com

PURPOSE OF REQUEST

"The City of Chandler Wireless Ordinance (2713) provides that where a wireless communication facility is not a permitted use by right a use permit in accordance with applicable standards, regulations and procedures shall first be obtained. Because this facility is not located where such a facility is permitted by right, this application is a request for a use permit to operate a wireless communication facility by following those standards, regulations and process procedures."

AT&T is proposing to locate a wireless facility at the Presidio office condominium campus. This request is for a use permit to operate a wireless facility which is intended to fill significant gaps in wireless coverage at and near the proposed site, as provided by AT&T Mobility's FCC license. AT&T strives to serve its subscribers while working with each jurisdiction to meet the local site design needs and requirements and when practical, to provide collocation opportunities to reduce unnecessary visual impacts.

DESCRIPTION OF PROPOSAL

AT&T is proposing to construct a new telecommunication facility consisting of a monopalm and its' essential equipment. The 65' monopalm will contain three sector frames with three antennas per sector for a total of nine antennas. The height to the top of antennas will be sixty-two (62) feet in overall height. Each antenna will have one remote radio head (RRH) for a total of nine mounted behind the antennas and will each be eight feet in length. The sector frame support will also contain two DC-6 Raycaps. The essential equipment is to be located within an approximate 24' x 30' enclosed compound, housing a new wave guide bridge for fiber optic cable to the monopalm and enclosed by a CMU block wall at which height screens all equipment , closed by way of a metal access gate.

The monopalm will be designed as a date palm, the antennas will not extend beyond the palm fronds. Antennas and mounting hardware will be painted to match the fronds. There will be roughly sixty-five (65) - 10ft fronds. As proposed, faux bark cladding will cover the entire pole and all cabling will run inside the monopalm.

Every attempt has been made to minimize the impact of the proposed facility to the overall Presidio Center by locating in the least intrusive area on the site. As a result of this effort only one parking space is removed from use. However, the parking agreement between the Presidio and the Tempe Korean Presbyterian Church (Ordinance No. 4359) provides a reciprocal easement agreement for parking access, ingress and egress having the effect of increasing the parking all in all.

Parking for the technician is proposed in a non-exclusive parking space immediately adjacent to the east wall of the proposed facility. As the proposed site will be unmanned and personnel will only be on site for periodic servicing and maintenance visits, there would be no need for an exclusive parking space. Parking is legally provided for by way of a private agreement between AT&T and Rick Richmond (land owner).

The proposed location of the facility is situated on the most southwest corner of the master parcel, internal to the overall center. The facility will be discreetly tucked away from Dobson Rd. In addition, an existing building to the east, the north and the west provide layers of separation from any residential uses.

RELATIONSHIP TO SURROUNDING PROPERTIES

The Presidio Condominium currently is comprised of multiple parcels, along with a master parcel for a combined area of 204,248 sq. ft. It is zoned P.A.D. Its' use is consistent with the use regulations for the underlying zoning district. Zoning of the surrounding properties to the north, south, east and west is P.A.D. To the south and east there is residential, however

the proposed setback of the facility is over seven hundred feet (700) from any residential. To the immediate south there is an existing wireless communication facility (WCF), unfortunately, the nature of that Monopalm design does not facilitate a co-location opportunity.

LOCATION AND ACCESSIBILITY/CIRCULATION SYSTEM

All access is paved and existing. Ingress and egress will be off of Dobson Rd via an existing paved driveway. With the exception of sporadic maintenance and service visits the proposed site will be unmanned so there are no regular hours of operation nor will there be an impact on existing traffic patterns. The proposed technician parking space located adjacent to the proposed eastern wall of the facility will be sufficient to handle all necessary parking onsite.

HOURS OF OPERATION

The proposed facility is self-operating and will operate 24 hours a day, 7 days a week, however, it is unmanned. Personnel will only be on site for periodic servicing and maintenance visits. The site will be connected to and monitored by a central switching center.

DEVELOPMENT PHASING

A typical site of this nature has a six to eight week construction schedule. Because of the isolated nature of the site, construction should have no impact on the public uses on the campus.

COMMUNITY FACILITIES/PUBLIC UTILITIES AND SERVICES

The site is served by a single meter with 200 amp service. It does not require any potable water and does not generate any wastewater or solid waste. All necessary telco and electrical services will be run at ground level in rigid conduit on sleepers.

NOISE, LIGHT, NUISANCES, AND OTHER ENVIRONMENTAL CONSIDERATIONS

The proposed wireless communication facility will not use any water or generate any wastewater or solid waste. There will be minimal technician service lighting which will be on a timed switch to be located at eight foot maximum within the equipment compound. The light will only be used during periodic servicing and maintenance. The proposed facility will

not generate any noxious odors, and sounds and vibrations will be limited to small cooling fans within the equipment cabinets, inside the equipment enclosure.

ON-SITE USES / NEIGHBORHOOD IMPACT

The Presidio Center is an approximate 4.6 acre site comprised of four individual buildings, by observation the uses on site are primarily medical. At the time of the site visit, the uses included medical for building identified on the site plan as "A". Building "B" identified on the site plan included medical as well as dental uses. Building "C" was undergoing a tenant improvement with no apparent tenant. Constructed in the far northwest corner was building "D" with what appeared to be storage facilities having garage doors across the front elevation.

Increasingly, wireless communication facilities are found to be compatible uses within commercial and residential zoning districts, especially when concealed or stealthed to mimic existing vertical elements in the environment. These facilities afford local businesses and residents enhanced service, including full access to their handheld devices capabilities, fewer dropped calls, more accurate tracking abilities for public safety officials and first responders, and most importantly, reliable access to emergency services.

The proposed facility's impact on the surrounding neighborhoods will be minimal. As proposed, the facility will be setback from residential zones approximately:

North – 940 linear feet

South – 760 linear feet

East – 715 linear feet

West – 660 linear feet

The site will be more than screened by layers of onsite uses and onsite landscaping. The setback distance provides ample buffering for adjacent residential uses to the east. To the south in addition to the setback distance, the Santan Freeway provides substantial buffering from any residential uses. As proposed the project is consistent with the wireless standards identified in the City of Chandler wireless ordinance.

gistration Search

gistration Search Results

isplayed Results

PA = Pending Application(s)

Specified Search

Latitude='**33-17-21.8 N**', Longitude='**111-52-41.8 E**', Radius=**1.6 Kilometers**

	Registration Number	Status	File Number	Owner Name	Latitude/Longitude	Structure City/State	Overall Height Above Ground (AGL)
1	1008211	Terminated	A0465121	NEW CINGULAR WIRELESS SERVICES, INC.	33-16-34.0N 111-52-47.0W	CHANDLER, AZ	30.4
2	1011593	Constructed	A0529686	Verizon Wireless (VAW) LLC	33-16-34.0N 111-52-47.0W	CHANDLER, AZ	35.7
3	1033330	Terminated	A0039546	SOUTHWESTCO WIRELESS LP DBA = BELL ATLANTIC MOBILE	33-17-50.0N 111-53-33.0W	CHANDLER, AZ	25.6
4	1047108	Dismantled	A0230481	VoiceStream PCS I License L.L.C.	33-17-50.0N 111-53-32.0W	CHANDLER, AZ	22.9
5	1209766	Constructed	A0774629	NEW CINGULAR WIRELESS SERVICES, INC.	33-18-08.6N 111-53-22.4W	Chandler, AZ	26.2
6	1228294	Constructed	A0698536	CROWN ATLANTIC COMPANY, LLC	33-17-50.1N 111-53-32.5W	Chandler, AZ	26.8
7	1249456	Cancelled	A0705176	T-Mobile West Corporation	33-17-18.9N 111-52-50.1W	Chandler, AZ	19.8
8	1250726	Constructed	A0783186	T-Mobile West LLC	33-17-18.2N 111-52-47.7W	Chandler, AZ	19.8
9	1273762	Constructed	A0680713	TowerCo Assets LLC	33-16-39.5N 111-52-06.3W	Chandler, AZ	18.2

CLOSE WINDOW

5 S Price Rd, Chandler, AZ 85224, USA
W Frye Rd
No. 4 & 6
No. 3
S Benson Ln
S Ellis Rd
W Geronimo Pl
S 94th St
No. 7
No. 8
Santan Fwy
202
W Pecos Rd
S Meadows Dr
W Morelos St
W Kesler Ln
W Winchester Way
W Flintlock Way
S Spectrum Blvd
S El Dorado Dr
W Ellis Rd
S Margate St
S Carriage Way
S Los Altos Dr
W Cholla Dr
W Dunstock Loop
S Central Dr
Mulberry
S Willis Ln
W Enfield Way
S Yucca Dr
W Musket Way
Galling Way
No. 9
S Price Rd
No. 1&2
W Germann Rd
W Swan Dr
© 2012 Google
Google earth
Imagery Date: 6/8/2012
1997
33°17'12.63" N 111°53'01.59" W elev 1190 ft
Eye alt 13519 ft

Google

W550 Tower map3

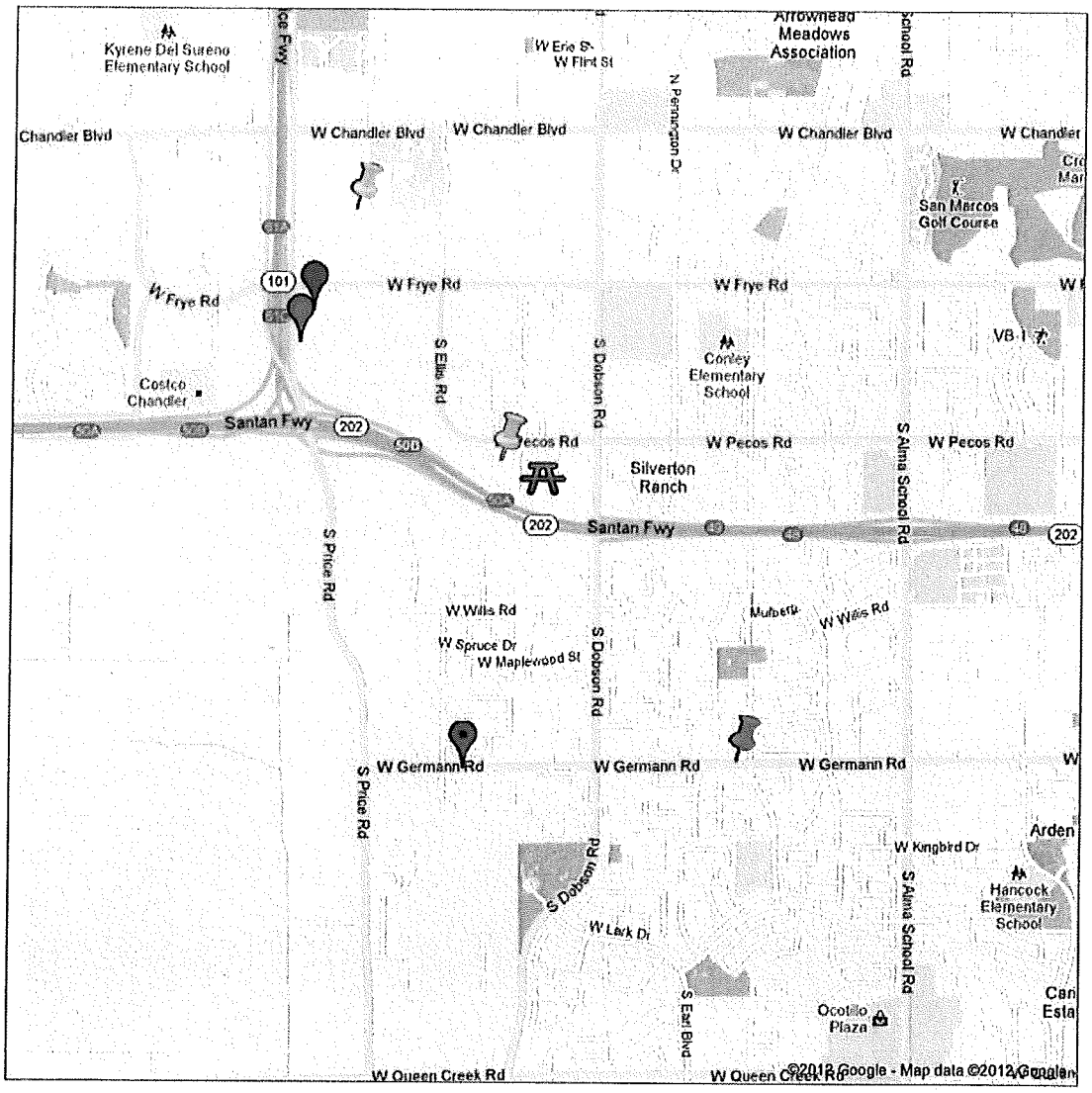

W550 Tower Map

Unlisted · 0 views
Created on Oct 10 · By · Updated 4 hours ago

- No.1 & 2 2490 W, Germann 85248
- No. 4 & 6 325 S Price Rd 85224
- No. 3 325 S. Price Rd 85224
- No. 5 2879 W. chandler 85224
- No. 7 2475 W. Pecos 85248
- No. 8 1150 S. Dobson Rd 85248
- No. 9 1500 W. Germann Rd 85248

W550 Coverage

© 2009 AT&T Knowledge Ventures. All rights reserved.
AT&T is a registered trademark of AT&T Knowledge Ventures.

Chandler Area Sites

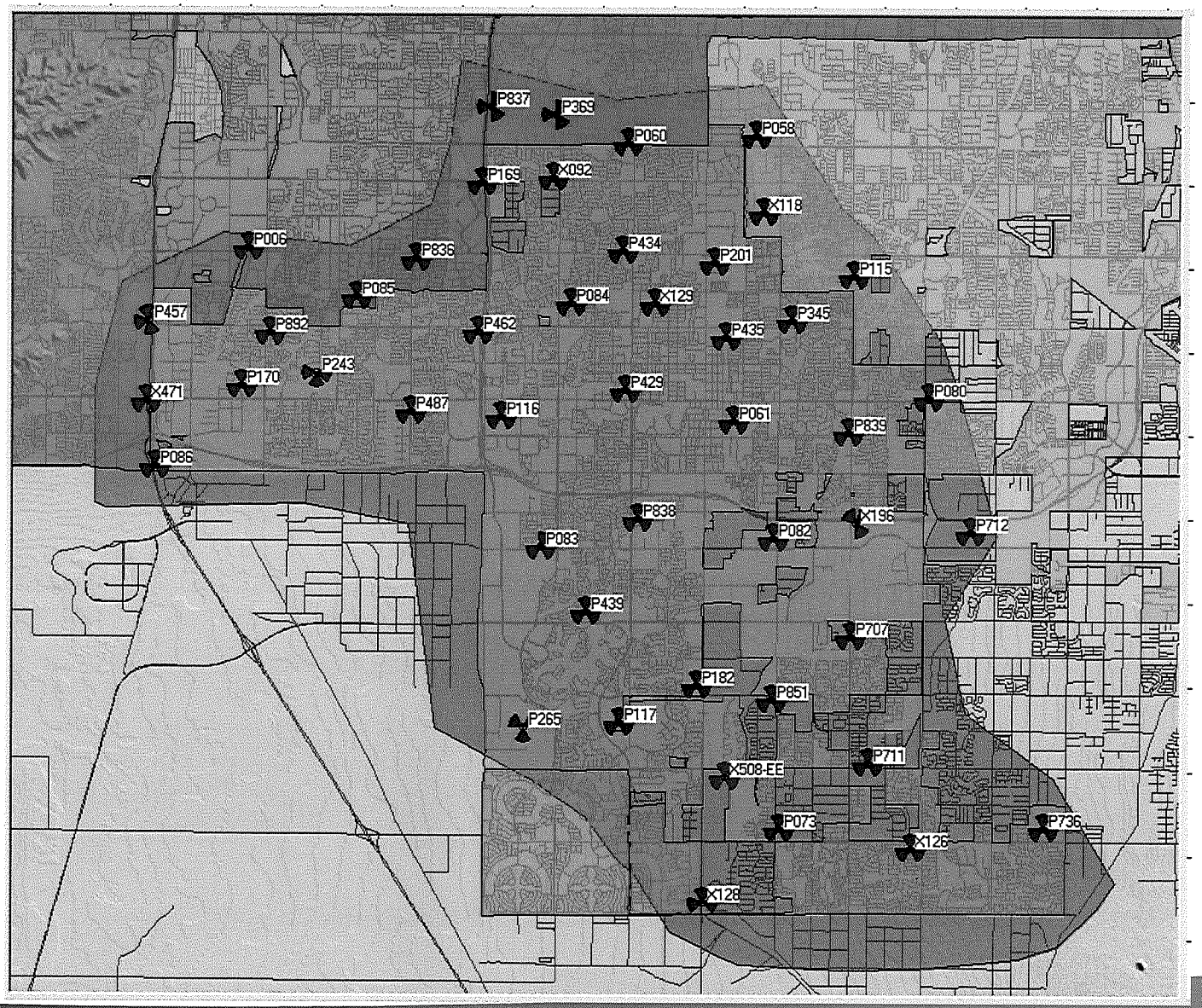

© 2009 AT&T Knowledge Ventures. All rights reserved.
AT&T is a registered trademark of AT&T Knowledge Ventures.

at&t

Chandler Site List

Site	Short ID	Type	Antenna RAD Center
AZPHU0006	P006	Monopole	79'
AZPHU0058	P058	Monopole	120'
AZPHU0060	P060	Monopole	75'
AZPHU0061	P061	Monopole	65'
AZPHU0073	P073	Monopole	98'
AZPHU0080	P080	Monopole	65'
AZPHU0082	P082	Monopole	69'
AZPHU0083	P083	Monopole	102'
AZPHU0084	P084	Light Standard	59'
AZPHU0085	P085	Monopole	65'
AZPHU0086	P086	Monopole	75'
AZPHU0115	P115	Roof Top	69'
AZPHU0116	P116	Monopole	82'
AZPHU0117	P117	Monopole	69'
AZPHU0169	P169	Power Pole	62'
AZPHU0170	P170	Monopole	98'
AZPHU0182	P182	Light Standard	66'
AZPHU0201	P201	Monopole	66'
AZPHU0243	P243	Roof Top	68'
AZPHU0265	P265	Monopole	58'
AZPHU0345	P345	Light Standard	48'
AZPHU0369	P369	Stealth Pole (canister)	57'
AZPHU0429	P429	Power Pole	45'
AZPHU0434	P434	Palm Tree	62'
AZPHU0435	P435	Monopole	75'
AZPHU0439	P439	Light Standard	67'
AZPHU0457	P457	Monopole	61'
AZPHU0462	P462	Roof Top	77'
AZPHU0487	P487	Power Pole	58'
AZPHU0707	P707	Power Pole	68'
AZPHU0711	P711	Monopole	65'
AZPHU0712	P712	Monopole	60'
AZPHU0736	P736	Light Standard	78'
AZPHU0836	P836	Palm Tree	53'
AZPHU0837	P837	Power Pole	70'
AZPHU0838	P838	Palm Tree	58'
AZPHU0839	P839	Light Standard	37'
AZPHU0851	P851	Monopole	52'
AZPHU0892	P892	Stealth Pole (canister)	47'
AZPHU6092	X092	Palm Tree	60'
AZPHU6118	X118	Light Standard	65'
AZPHU6126	X126	Palm Tree	60'
AZPHU6128	X128	Palm Tree	63'
AZPHU6129	X129	Palm Tree	63'
AZPHU6196	X196	Palm Tree	58'
AZPHU6471	X471	Pine Tree	52'

© 2009 AT&T Knowledge Ventures. All rights reserved.
AT&T is a registered trademark of AT&T Knowledge Ventures.

PROJECT SCOPE

AT&T PROPOSES TO CONSTRUCT A NEW TELECOMMUNICATION FACILITY. FACILITY WILL CONSIST OF AN EQUIPMENT COMPOUND CONSTRUCTED OF MASONRY W/ A METAL ACCESS GATE. NEW COMPOUND WILL CONSIST OF AN EQUIPMENT SHELTER FOR NEW EQUIPMENT AND A NEW WAVE GUIDE BRIDGE FOR (N) FIBER OPTIC CABLE TO 65' MONOPALM. (N) MONOPALM WILL CONTAIN (3) SECTOR FRAMES W/ (3) ANTENNAS PER SECTOR FOR A TOTAL OF (9) ANTENNAS. EACH ANTENNA WILL HAVE (1) RRH FOR A TOTAL OF (9) MOUNTED BEHIND ANTENNAS. SECTOR FRAME SUPPORT WILL ALSO CONTAIN (2) DC-6 RAYCAPS.

PROJECT INFORMATION

SITE ADDRESS:	1120 S DOBSON RD CHANDLER, AZ 85286
DECIMAL LATITUDE:	33.289242 N
DECIMAL LONGITUDE:	-111.878325 W
LATITUDE:	33° 17' 21.27" N
LONGITUDE:	-111° 52' 41.97" W
APN:	303-25-753A
ZONING:	PAD
JURISDICTION:	CITY OF CHANDLER
PROPOSED USE:	UNMANNED TELECOMUNICSTIONS FACILITY
OCCUPANCY:	U

DRAWING INDEX

		REV
25736-625-FC6-W550-CC-01	TITLE SHEET	1
25736-625-FC6-W550-CC-04A	SITE SURVEY	1
25736-625-FC6-W550-CC-04B	OVERALL SITE PLAN	1
25736-625-FC6-W550-CC-05	DETAILED PLAN	1
25736-625-FC6-W550-CC-06	TOWER ELEVATIONS	1
25736-625-FC6-W550-CC-07	ANTENNA LAYOUT & DETAILS	1

DESIGN PACKAGE BASED ON RF DATA SHEET DATED 07-31-12 (V1-B-0)

NOTES

A/E DOCUMENT REVIEW STATUS

STATUS CODE

1		ACCEPTED – WITH MINOR OR NO COMMENTS, CONSTRUCTION MAY PROCEED
2		NOT ACCEPTED – PLEASE RESOLVE COMMENTS AND RESUBMIT

ACCEPTANCE DOES NOT CONSTITUTE APPROVAL OF DESIGN DETAILS, CALCULATIONS, ANALYSIS, TEST METHODS OR MATERIALS DEVELOPED OR SELECTED BY SUBCONTRACTOR AND DOES NOT RELIEVE SUBCONTRACTOR FROM FULL COMPLIANCE WITH CONTRACTUAL OBLIGATION.

	ENG.	CONST.			
REVIEWED:					
BY:			DATE:		

REDLINE DRAWING REVIEW

NAME (PRINT) SIGNATURE DATE

GENERAL CONTRACTOR – CONFIRM ACCURACY OF THESE REDLINE DRAWINGS

NAME (PRINT) SIGNATURE DATE

FIELD COORDINATOR – VERIFY INSTALLATION PER REDLINE DRAWINGS

NAME (PRINT) SIGNATURE DATE

ENGINEERING – Market Engineer Shall Review Redline Drawings To Ensure Changes Do Not Alter The Original Design Intent And/Or Are Code Compliant

at&t

SITE NUMBER: W550-CC
CANDIDATE NAME: PRESIDIO

VICINITY MAP

HEAD SOUTH ON N TATUM BLVD TOWARD E ROSE GARDEN LN, TURN LEFT, TURN RIGHT ONTO LOOP 101, MERGE ONTO AZ-101 LOOP E, TAKE THE LOOP 101 E FOR 28.4 MI, TAKE EXIT 60 TOWARD CHANDLER BLVD, MERGE ONTO S PRICE RD, TURN LEFT ONTO W CHANDLER BLVD, TURN RIGHT ONTO N DOBSON RD, CONTINUE ON N DOBSON RD FOR 1.1 MI. SITE LOCATION WILL BE ON THE RIGHT INSIDE THE PERSIDIO BUSINESS COMPLEX.

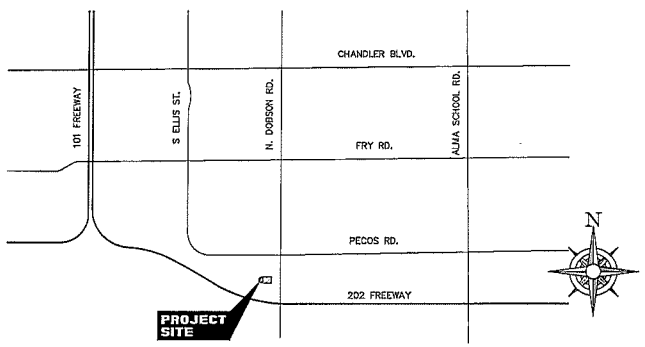

SITE QUALIFICATION PARTICIPANTS

	NAME	COMPANY	NUMBER
A/E	ANDY LIVINGSTON	CLEAR BLUE SERVICES	602-426-9500
SAC	DAYNA BEDNEY	CLEAR BLUE SERVICES	602-426-9500
SAC	SHANNON MORRELLI	BECHTEL	623-282-3040
RF	OSGUR CELIK	AT&T	602-625-3782
LANDLORD	RICK RICHMOND	CANADIAN-AMERICAN REAL ESTATE	480-659-5219

APPROVALS

AT&T (RF): _____ DATE: _____

AT&T (CONST.): _____ DATE: _____

AT&T (S.A.): _____ DATE: _____

LANDLORD: _____ DATE: _____

LANDLORD: _____ DATE: _____

A&E (S.A.): _____ DATE: _____

APPLICABLE BUILDING CODES AND STANDARDS

SUBCONTRACTOR'S WORK SHALL COMPLY WITH ALL APPLICABLE NATIONAL, STATE, AND LOCAL CODES AS ADOPTED BY THE LOCAL AUTHORITY HAVING JURISDICTION (AHJ) FOR THE LOCATION. THE EDITION OF THE AHJ ADOPTED CODES AND STANDARDS IN EFFECT ON THE DATE OF CONTRACT AWARD SHALL GOVERN THE DESIGN.

BUILDING CODE:
INTERNATIONAL BUILDING CODE 2006

ELECTRICAL CODE:
[NATIONAL FIRE PROTECTION ASSOCIATION (NFPA) 70 – 2005, NATIONAL ELECTRICAL CODE,
LIGHTNING PROTECTION CODE:
[NFPA 780 – 2000, LIGHTNING PROTECTION CODE]

SUBCONTRACTOR'S WORK SHALL COMPLY WITH THE LATEST EDITION OF THE FOLLOWING STANDARDS.
AMERICAN CONCRETE INSTITUTE (ACI) 318, BUILDING CODE REQUIREMENTS FOR STRUCTURAL CONCRETE
AMERICAN INSTITUTE OF STEEL CONSTRUCTION (AISC), MANUAL OF STEEL CONSTRUCTION, ASD, NINTH EDITION
TELECOMMUNICATIONS INDUSTRY ASSOCIATION (TIA) 222-G, STRUCTURAL STANDARDS FOR STEEL ANTENNA TOWER AND ANTENNA SUPPORTING STRUCTURES:
TIA 607, COMMERCIAL BUILDING GROUNDING AND BONDING REQUIREMENTS FOR TELECOMMUNICATIONS

INSTITUTE FOR ELECTRICAL AND ELECTRONICS ENGINEERS (IEEE) 81, GUIDE FOR MEASURING EARTH RESISTIVITY, GROUND IMPEDANCE, AND EARTH SURFACE POTENTIALS OF A GROUND SYSTEM
IEEE 1100 (1999) RECOMMENDED PRACTICE FOR POWERING AND GROUNDING OF ELECTRONIC EQUIPMENT

IEEE C62.41, RECOMMENDED PRACTICES ON SURGE VOLTAGES IN LOW VOLTAGE AC POWER CIRCUITS (FOR LOCATION CATEGORY "C3" AND "HIGH SYSTEM EXPOSURE")

TELCORDIA GR-1275, GENERAL INSTALLATION REQUIREMENTS

TELCORDIA GR-1503, COAXIAL CABLE CONNECTIONS

ANSI T1.311, FOR TELECOM – DC POWER SYSTEMS – TELECOM, ENVIRONMENTAL PROTECTION

FOR ANY CONFLICTS BETWEEN SECTIONS OF LISTED CODES AND STANDARDS REGARDING MATERIAL, METHODS OF CONSTRUCTION, OR OTHER REQUIREMENTS, THE MOST RESTRICTIVE REQUIREMENT SHALL GOVERN. WHERE THERE IS CONFLICT BETWEEN A GENERAL REQUIREMENT AND A SPECIFIC REQUIREMENT, THE SPECIFIC REQUIREMENT SHALL GOVERN.

DETAIL 103 –

Clear Blue Services
11011 S. 48TH ST., STE.210
PHOENIX, AZ 85044 602-426-9500

BECHTEL COMMUNICATIONS, INC.
2075 W PINNACLE PEAK RD, SUITE 110
PHOENIX, AZ 85027
PHONE: (623) 282-3091

W550-CC
PRESIDIO
1120 S DOBSON RD
CHANDLER, AZ 85286

at&t
AT&T MOBILITY
20830 N. TATUM BLVD, SUITE 400
PHOENIX, AZ 85050

NO.	DATE	REVISIONS	BY	CHK	APP'D
1	10/10/12	CITY COMMENTS	JM	SD	AL
0	09/14/12	ZONING DRAWINGS	JH	SD	AL

SCALE: AS SHOWN DESIGNED BY: CB DRAWN BY: JH

REGISTERED ARCHITECT CERTIFICATE NO. 32874 STEVEN L. DICONICO DATE SIGNED 10/10/12 ARIZONA U.S.A.

THIS DOCUMENT CONTAINS AN ELECTRONIC SIGNATURE PURSUANT TO A.R.S. TITLE 41 AND TITLE 44. IT IS A VIOLATION FOR ANY PERSON, UNLESS UNDER THE DIRECT SUPERVISION OF THE REGISTRANT, TO MODIFY THIS DOCUMENT IN ANY WAY.

PRELIMINARY UNLESS SIGNED

EXPIRES 9-30-2013

AT&T MOBILITY

TITLE SHEET

FA CODE	DRAWING NUMBER	REV
10567328	25736-625-FC6-W550-CC-01	1

22 x 34 "D" SIZE

6 5 4 3 2

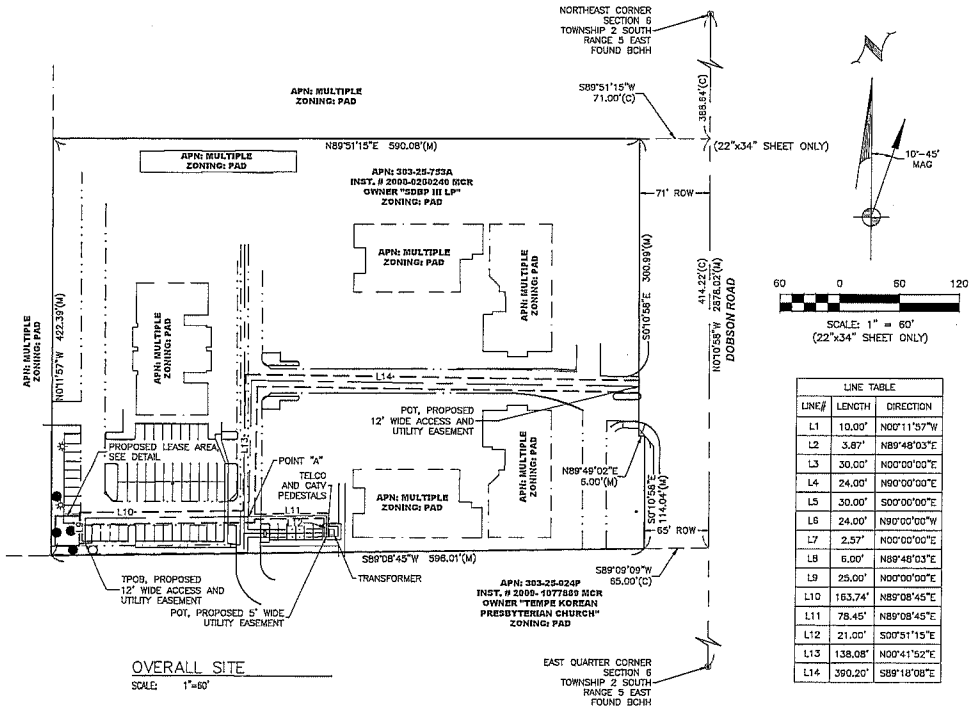

OVERALL SITE

SCALE: 1"=60'

LINE TABLE		
LINE#	LENGTH	DIRECTION
L1	10.00'	N00°11'57"W
L2	3.87'	N89°48'03"E
L3	30.00'	N00°00'00"E
L4	24.00'	N90°00'00"E
L5	30.00'	S00°00'00"E
L6	24.00'	N90°00'00"W
L7	2.57'	N00°00'00"E
L8	6.00'	N89°48'03"E
L9	25.00'	N00°00'00"E
L10	163.74'	N89°08'45"E
L11	78.45'	N89°08'45"E
L12	21.00'	S00°51'15"E
L13	138.08'	N00°41'52"E
L14	390.20'	S89°18'08"E

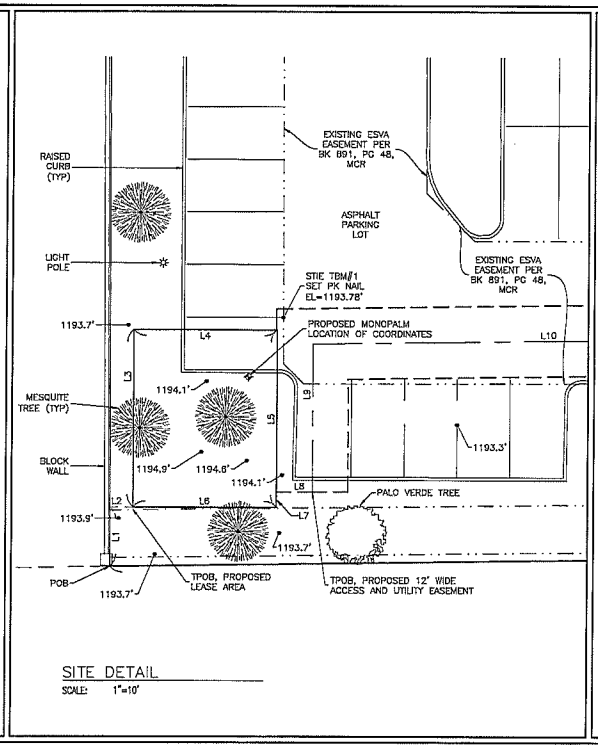

SITE DETAIL

SCALE: 1"=10'

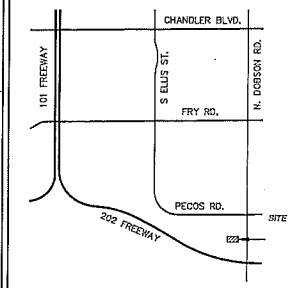

VICINITY MAP

SCALE: NTS

LEGEND

BCHH–BRASS CAP IN HANDHOLE
BCFL–BRASS CAP FLUSH
ROW–RIGHT OF WAY
TPOB–TRUE POINT OF BEGINNING
POT–POINT OF TERMINUS
EP–EDGE OF PAVEMENT
DW–DRIVEWAY
SW–SIDEWALK
MCR–MARICOPA COUNTY RECORDER
ESVA–EMERGENCY SERVICES VEHICLE ACCESS EASEMENT

CENTER OF PROPOSED MONOPALM	
LATITUDE 33° 17' 21.27" NORTH	(NAD83)
LONGITUDE 111° 52' 41.97" WEST	
ELEVATION 1194.2'	(NAVD88)

SURVEY DATE
7/31/12

BENCHMARK
ELEVATION ESTABLISHED FROM GPS DERIVED ORTHOMETRIC HEIGHTS, APPLYING GEOID 09 SEPARATIONS, CONSTRAINING TO NGS CONTROL STATION AZTP, ELEVATION 1282.8' NAVD88.

BASIS OF BEARINGS
BEARINGS SHOWED HEREON ARE BASED UPON U.S. STATE PLANE NAD83 COORDINATE SYSTEM ARIZONA CENTRAL ZONE, DETERMINED BY GPS OBSERVATIONS.

SURVEY NOTES
REFERENCE IS MADE TO THE TITLE REPORT ORDER #21205949, ISSUED BY FIRST AMERICAN TITLE COMPANY, DATED JULY 17, 2012.
ALL EASEMENTS CONTAINED WITHIN SAID TITLE REPORT AFFECTING THE IMMEDIATE AREA SURROUNDING THE LEASE HAVE BEEN PLOTTED (EXCEPT FOR ROOFTOPS).
SURVEYOR HAS NOT PERFORMED A SEARCH OF PUBLIC RECORDS TO DETERMINE ANY DEFECT IN TITLE ISSUED.
THE BOUNDARY SHOWN HEREON IS PLOTTED FROM RECORD INFORMATION AND DOES NOT CONSTITUTE A BOUNDARY SURVEY OF THE PROPERTY.

UTILITY NOTES
SURVEYOR DOES NOT GUARANTEE THAT ALL UTILITIES ARE SHOWN. IT IS THE RESPONSIBILITY OF THE CONTRACTOR TO CONTACT BLUE STAKE AND ANY OTHER INVOLVED AGENCIES TO LOCATE ALL UTILITIES PRIOR TO CONSTRUCTION.

1A CERTIFICATION
THE HORIZONTAL ACCURACY OF THE LATITUDE AND LONGITUDE AT THE CENTER OF EACH SECTOR FALLS WITHIN FIFTEEN (15) FEET. THE ELEVATIONS (NAVD88) OF THE GROUND AND FIXTURES FALL WITHIN THREE (3) FEET.

PARENT PARCEL LEGAL DESCRIPTION
AS RECORDED IN INSTRUMENT NO. 2008–0260240, RECORDS OF MARICOPA COUNTY, ARIZONA.

ALL THE COMMON ELEMENTS, OF THE PRESIDIO, A CONDOMINIUM, AS CREATED IN CONDOMINIUM DECLARATION FOR THE PRESIDIO, A CONDOMINIUM RECORDED MARCH 25, 2008 AS 2008–0260240A, FIRST AMENDMENT RECORDED JUNE 24, 2008 AS 2008–0559161, SECOND AMENDMENT RECORDED JANUARY 30, 2009 AS 2009–0078967, THIRD AMENDMENT RECORDED APRIL 29, 2009 AS 2009–0378404, FOURTH AMENDMENT RECORDED SEPTEMBER 30, 2010 AS 2010–0768266, FIFTH AMENDMENT RECORDED JUNE 9, 2011 AS 2001–048996 AND AS CREATED IN CONDOMINIUM PLAT FOR THE PRESIDIO RECORDED IN BOOK 979 OF MAPS, PAGE 2 RECORDS OF MARICOPA COUNTY, ARIZONA.

LEASE AREA LEGAL DESCRIPTION
ALL THAT PORTION OF THE COMMON ELEMENTS, OF THE PRESIDIO, A CONDOMINIUM, AS CREATED IN CONDOMINIUM PLAT FOR THE PRESIDIO RECORDED IN BOOK 979 OF MAPS, PAGE 2 RECORDS OF MARICOPA COUNTY, ARIZONA, DESCRIBED AS FOLLOWS:

BEGINNING AT THE SOUTHWEST CORNER OF SAID CONDOMINIUM PLAT FOR PRESIDIO;

THENCE NORTH 00 DEGREES 11 MINUTES 57 SECONDS WEST ALONG THE WEST LINE OF SAID PLAT, 10.00 FEET;
THENCE DEPARTING SAID WEST LINE, NORTH 89 DEGREES 48 MINUTES 03 SECONDS EAST, 3.87 FEET TO THE TRUE POINT OF BEGINNING;

THENCE NORTH 00 DEGREES 00 MINUTES 00 SECONDS EAST, 30.00 FEET;
THENCE NORTH 90 DEGREES 00 MINUTES 00 SECONDS EAST, 24.00 FEET;
THENCE SOUTH 00 DEGREES 00 MINUTES 00 SECONDS EAST, 30.00 FEET;
THENCE NORTH 90 DEGREES 00 MINUTES 00 SECONDS WEST, 24.00 FEET TO THE TRUE POINT OF BEGINNING.

ACCESS AND UTILITY EASEMENT LEGAL DESCRIPTION
ALL THAT PORTION OF THE COMMON ELEMENTS, OF THE PRESIDIO, A CONDOMINIUM, AS CREATED IN CONDOMINIUM PLAT FOR THE PRESIDIO RECORDED IN BOOK 979 OF MAPS, PAGE 2 RECORDS OF MARICOPA COUNTY, ARIZONA, BEING A 12.00 FOOT WIDE EASEMENT FOR ACCESS AND UTILITY PURPOSES, LYING 6.00 FEET ON EACH SIDE OF THE FOLLOWING DESCRIBED CENTERLINE:

BEGINNING AT THE SOUTHWEST CORNER OF SAID CONDOMINIUM PLAT FOR PRESIDIO;

THENCE NORTH 00 DEGREES 11 MINUTES 57 SECONDS WEST ALONG THE WEST LINE OF SAID PLAT, 10.00 FEET;
THENCE DEPARTING SAID WEST LINE, NORTH 89 DEGREES 48 MINUTES 03 SECONDS EAST, 3.87 FEET;
THENCE NORTH 90 DEGREES 00 MINUTES 00 SECONDS EAST, 24.00 FEET;
THENCE NORTH 00 DEGREES 00 MINUTES 00 SECONDS EAST, 2.57 FEET;
THENCE NORTH 89 DEGREES 48 MINUTES 03 SECONDS EAST, 6.00 FEET TO THE TRUE POINT OF BEGINNING;

THENCE NORTH 00 DEGREES 00 MINUTES 00 SECONDS EAST, 25.00 FEET;
THENCE NORTH 89 DEGREES 08 MINUTES 45 SECONDS EAST, 163.74 FEET TO A POINT HEREINAFTER REFERRED TO AS POINT "A";
THENCE NORTH 00 DEGREES 41 MINUTES 52 SECONDS EAST, 138.08 FEET;
THENCE SOUTH 89 DEGREES 18 MINUTES 08 SECONDS EAST, 390.20 FEET TO THE POINT OF TERMINUS ON THE WEST RIGHT OF WAY LINE OF DOBSON ROAD;

TOGETHER WITH A 5.00 FOOT WIDE UTILITY EASEMENT, LYING 2.50 FEET ON EACH SIDE OF THE FOLLOWING DESCRIBED CENTERLINE;

BEGINNING AT AFOREMENTIONED POINT "A";

THENCE NORTH 89 DEGREES 08 MINUTES 45 SECONDS EAST, 78.45 FEET;
THENCE SOUTH 00 DEGREES 51 MINUTES 15 SECONDS EAST, 21.00 FEET TO THE POINT OF TERMINUS.

THE SIDELINES OF SAID EASEMENT ARE TO INTERSECT AT ALL ANGLE POINTS TO PROVIDE CONTINUOUS WIDTH THROUGHOUT.

JOB NUMBER: 12-080

Infinity ENGINEERING Services, ltd.
P.O. BOX 88034
PHOENIX, AZ 85080
PHONE: (602) 070-9635

BECHTEL COMMUNICATIONS, INC.
2075 W PINNACLE PEAK RD, SUITE 110
PHOENIX, AZ 85027
PHONE: (623) 282-3091

W550-CC
PRESIDIO
1120 S. DOBSON RD
CHANDLER, AZ 85286

at&t
AT&T MOBILITY
20830 N. TATUM BLVD. SUITE 400
PHOENIX, AZ 85050
PHONE: (480) 575-7241

NO.	DATE	REVISIONS	BY	CHK	APP'D
0	9/13/12	SUBMITTAL	DH	BN	BN
A	8/8/12	PRELIMINARY	DH	BN	BN

SCALE: AS SHOWN
DRAWN BY: DH

REGISTERED LAND SURVEYOR
41806
BRETT L. NOWACKI
8/13/12
ARIZONA, U.S.A.
EXPIRES 3-31-2014

AT&T MOBILITY

SITE SURVEY

FA CODE	DRAWING NUMBER	REV
10567328	25736-625-FC6-W550-CC-04A	0

22 x 34 "D" SIZE

SIGNS

1. INSTALL EMERGENCY INFORMATION PLACARD NEAR ENTRANCE GATE OF EQUIPMENT AREA (OR MOST VISIBLE PLACE ON OUTSIDE COMPOUND WALL). PLACARD IS TO CONTAIN SITE NAME, SITE NUMBER, COMPANY NAME, ADDRESS INFORMATION, AND A "800" NUMBER TO DIAL IN CASE OF EMERGENCY. PLACARD IS TO CONSIST OF HIGH CONTRAST LETTERING (WHITE BACK GROUND W/ RED LETTERING) BEHIND VANDAL RESISTANT LEXAN COVER.

2. INSTALL ADDRESS PLACARD NEAR ENTRANCE GATE OF EQUIPMENT AREA (OR FACING STREET OF ASSOCIATED ADDRESS). PLACARD IS TO CONTAIN 12" TALL, HIGH CONTRAST LETTERING (WHITE BACK GROUND AND RED LETTERS) BEHIND VANDAL RESISTANT LEXAN COVER.

LIGHTING

1. MINIMAL LIGHTING WILL BE INSTALLED AT EQUIPMENT AREA FOR THE PURPOSE OF EQUIPMENT MAINTENANCE. LIGHT WILL BE ON A SWITCH OVER-RIDE, 300 WATT W/4 HR. TIMER.

2. ADDITIONAL LIGHTING WILL BE INSTALLED IF REQUIRED BY MUNICIPALITY FOR SECURITY PURPOSES.

3. ALL LIGHTING IS TO BE INSTALLED NO HIGHER THAN 8'-0", (UNLESS OTHERWISE REQUIRED BY INDIVIDUAL MUNICIPALITY).

4. ALL LIGHTING WILL BE THAT OF "FULL CUT OFF LENSES".

REPLACEMENT OF AREA LIGHTING

1. IN THE EVENT THE CARRIER PROPOSES TO REPLACE EXISTING FIELD, PARKING, OR BUILDING LIGHTING, ALL LIGHTS, FIXTURES WILL MATCH THE ORIGINAL INSTALLATION UNLESS NOTED OTHERWISE. LIGHTS WILL BE ALIGNED AND ADJUSTED BACK TO THEIR ORIGINAL POSITION.

FENCING

1. PICKETS IN NEW FENCING WILL NOT EXCEED THE IBC MAXIMUM OF 4" ON CENTER.

2. WHEN APPLICABLE NEW FENCING WILL MATCH EXISTING FENCING IN STYLE, COLOR, AND HEIGHT (SEE PLAN FOR SPECIFICS)

COMPLIANCE

1. ADA COMPLIANCE: FACILITY IS NOT STAFFED AND NOT NORMALLY OCCUPIED.

2. SUB-CONTRACTOR IS RESPONSIBLE FOR ERECTING TEMPORARY BARRICADES AND/OR FENCING TO PROTECT THE SAFETY OF THE PUBLIC DURING CONSTRUCTION.

3. THE ANTENNAS SHALL NOT INTERFERE WITH ANY EXISTING COMMUNICATION SITES.

4. ALL ITEMS SHOWN ON THIS DRAWING ARE EXISTING UNLESS OTHERWISE NOTED.

5. DEVELOPMENT AND USE OF THIS SITE WILL CONFORM TO ALL APPLICABLE CODES AND ORDINANCES.

NOTE:
1. SITE PLAN RENDERING DERIVED FROM DETAILS PROVIDED FROM SURVEY BY INFINITY ENGINEERING, SURVEY #12-080.

CALL TWO WORKING DAYS BEFORE YOU DIG
602-263-1100
1-800-STAKE-IT
(OUTSIDE MARICOPA COUNTY)

NOTE TO CONTRACTOR:

VERIFY TELCO P.O.C. W/ BECHTEL C.M. PRIOR TO CONSTRUCTION. TELCO P.O.C. SHOWN FOR REFERENCE ONLY.

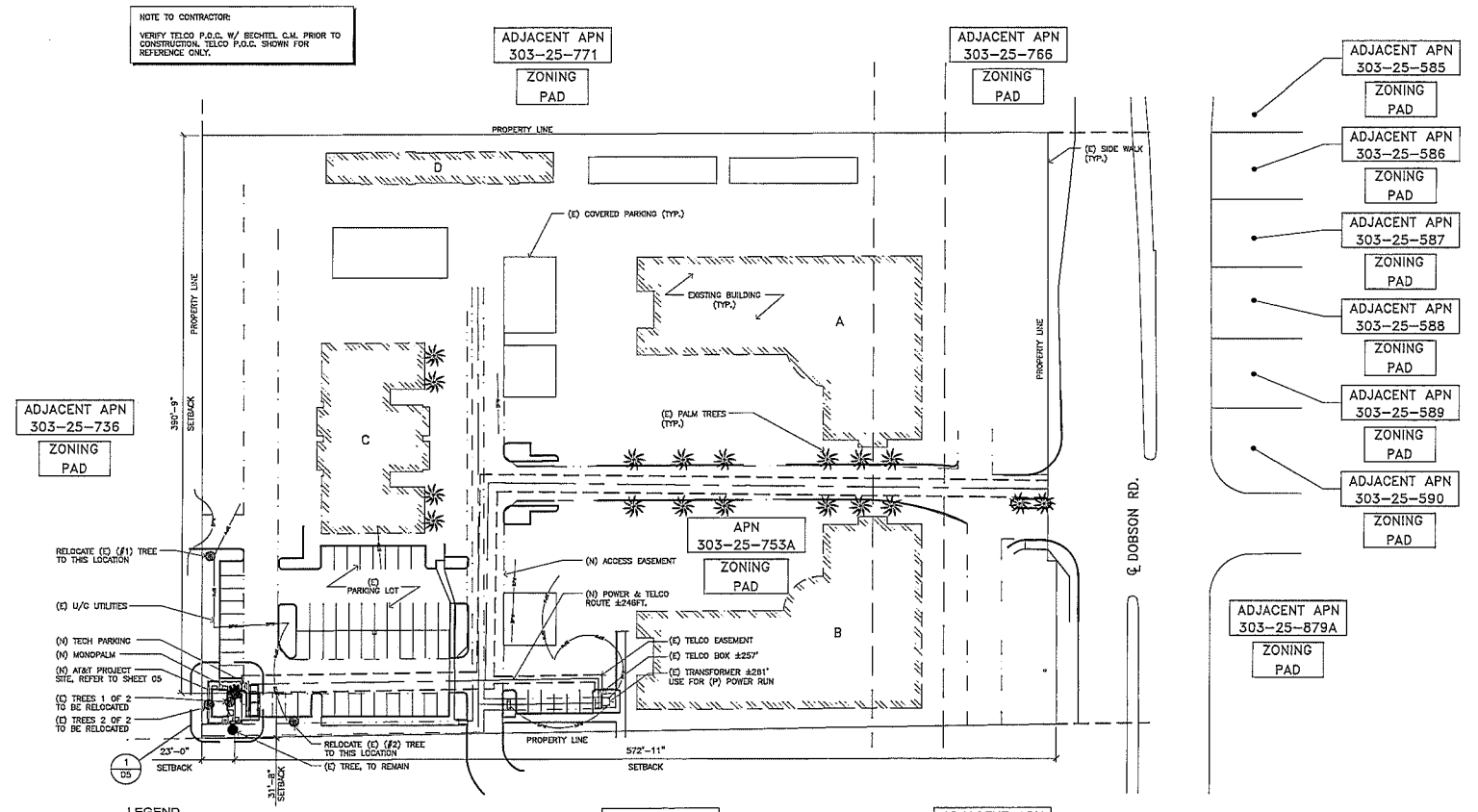

LEGEND

POB	POINT OF BEGINNING		POSITION OF GEODETIC COORDINATES
POT	POINT OF TERMINUS		WATER CONTROL VALVE
PUE	PUBLIC UTILITY EASEMENT		FIRE HYDRANT
ROW	RIGHT OF WAY		POWER POLE
DW	DRIVEWAY		ELECTRIC MANHOLE
SW	SIDEWALK		TELCO MANHOLE
BCHH	BRASS CAP IN HANDHOLE		FOUND AS NOTED
BCFL	BRASS CAP FLUSH		

OHE — OVERHEAD ELECTRIC	PROPERTY LINE	BARBED WIRE FENCE
BPW — BLUE STAKE POWER	BGAS — BLUE STAKE GAS	BW — BLUE STAKE WATER

GRAPHIC SCALE
0 10' 20' 40' 80'
1 inch = 40 ft.
(22"x34" SHEET ONLY)

N

NOTES	NONE	2	OVERALL SITE PLAN	SCALE: 1" = 40'-0"	1

Clear Blue Services
11011 S. 48TH ST. STE# 210
PHOENIX, AZ 85044 602-429-9909

BECHTEL COMMUNICATIONS, INC.
2075 W PINNACLE PEAK RD. SUITE 110
PHOENIX, AZ 85027
PHONE: (623) 282-3091

W550-CC
PRESIDIO
1120 S DOBSON RD
CHANDLER, AZ 85286

at&t
AT&T MOBILITY
20830 N. TATUM BLVD. SUITE 400
PHOENIX, AZ 85050

NO.	DATE	REVISIONS	BY	CHK	APP'D
1	10/10/12	CITY COMMENTS	JM	SD	AL
0	09/14/12	ZONING DRAWINGS	JH	SD	AL

SCALE: AS SHOWN | DESIGNED BY: CB | DRAWN BY: JH

REGISTERED ARCHITECT CERTIFICATE NO. 32874 STEVEN L. DEJONGE ARIZONA U.S.A.
EXPIRES 9-30-2013

THIS DOCUMENT CONTAINS AN ELECTRONIC SIGNATURE PURSUANT TO A.R.S. TITLE 41 AND TITLE 44. IT IS A VIOLATION FOR ANY PERSON, UNLESS UNDER THE DIRECT SUPERVISION OF THE REGISTRANT, TO MODIFY THIS DOCUMENT IN ANY WAY.

PRELIMINARY UNLESS SIGNED

AT&T MOBILITY

OVERALL SITE PLAN

FA CODE	DRAWING NUMBER	REV
10567328	25736-625-FC6-W550-CC-04B	1

22 x 34 D SHEET

POWER & TELEPHONE GENERAL NOTES

1. SUBCONTRACTOR SHALL COORDINATE WITH UTILITY COMPANY FOR FINAL AND EXACT WORK/MATERIALS REQUIREMENTS AND CONSTRUCT TO UTILITY COMPANY ENGINEERING PLANS AND SPECIFICATIONS ONLY.
2. SUBCONTRACTOR SHALL FURNISH AND INSTALL ALL CONDUIT, PULL WIRES, CABLE PULLBOXES, CONCRETE ENCASEMENT OF CONDUIT (IF REQUIRED), TRANSFORMER PAD, BARRIERS, POLE RISERS, TRENCHING, BACKFILL, AND INCLUDE ANY UTILITY COMPANY REQUIREMENTS IN SCOPE OF WORK.
3. UTILITY CONTACTS

TELEPHONE COMPANY:		POWER COMPANY:	
COMPANY NAME:	–	COMPANY NAME:	—
ADDRESS:	–	ADDRESS:	—
CITY, STATE, ZIP	–	CITY, STATE, ZIP	—
PHONE NUMBER:	–	PHONE NUMBER:	—
CONTACT:	–	CONTACT:	—

NOTICE

1. ELECTRICAL SUBCONTRACTOR SHALL CONTACT UTILITY COMPANIES 14 DAYS MINIMUM PRIOR TO ACTIVATION AND NOTIFY UTILITY COMPANY REPRESENTATIVE OF THE EXACT DATE OF ACTIVATION.
2. VERIFY ALL EXISTING UNDERGROUND UTILITIES BEFORE TRENCHING. THESE DRAWINGS HAVE NOT BEEN CONFIRMED WITH THE UTILITY COMPANIES DUE TO TIME CONSTRAINTS AND ARE INTENDED AS A GENERAL GUIDE ONLY.
3. ELECTRICAL SUBCONTRACTOR SHALL CONTACT TELE. CO. & POWER CO. VERIFY EXACT ROUTING/SIZES & CONDITIONS BEFORE TRENCHING.
4. INSTALL ALL CONDUITS & EQUIPMENT AS SPECIFIED BY POWER CO. & TELEPHONE CO.
5. FIELD VERIFY EXACT MEASUREMENT OF ALL NEW UTILITY FEEDERS PRIOR TO BID. DO NOT SCALE FROM THESE PLANS.
6. CONTACT UTILITY COMPANIES FOR UNDERGROUND CONDUIT INSPECTIONS PRIOR TO BACKFILLING TRENCH.
7. IT IS THE ELECTRICAL SUBCONTRACTORS RESPONSIBILTY TO COORDINATE WITH THE POWER AND TELEPHONE COMPANIES TO INSURE THAT SERVICE CONDUITS ARE TERMINATED AT THE CORRECT POWER POLE,PEDESTAL,ETC.

NOTES NONE | 3

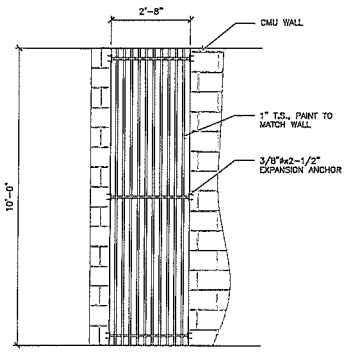

WALL VENT DETAIL SCALE: 1/2" = 1'-0" | 2

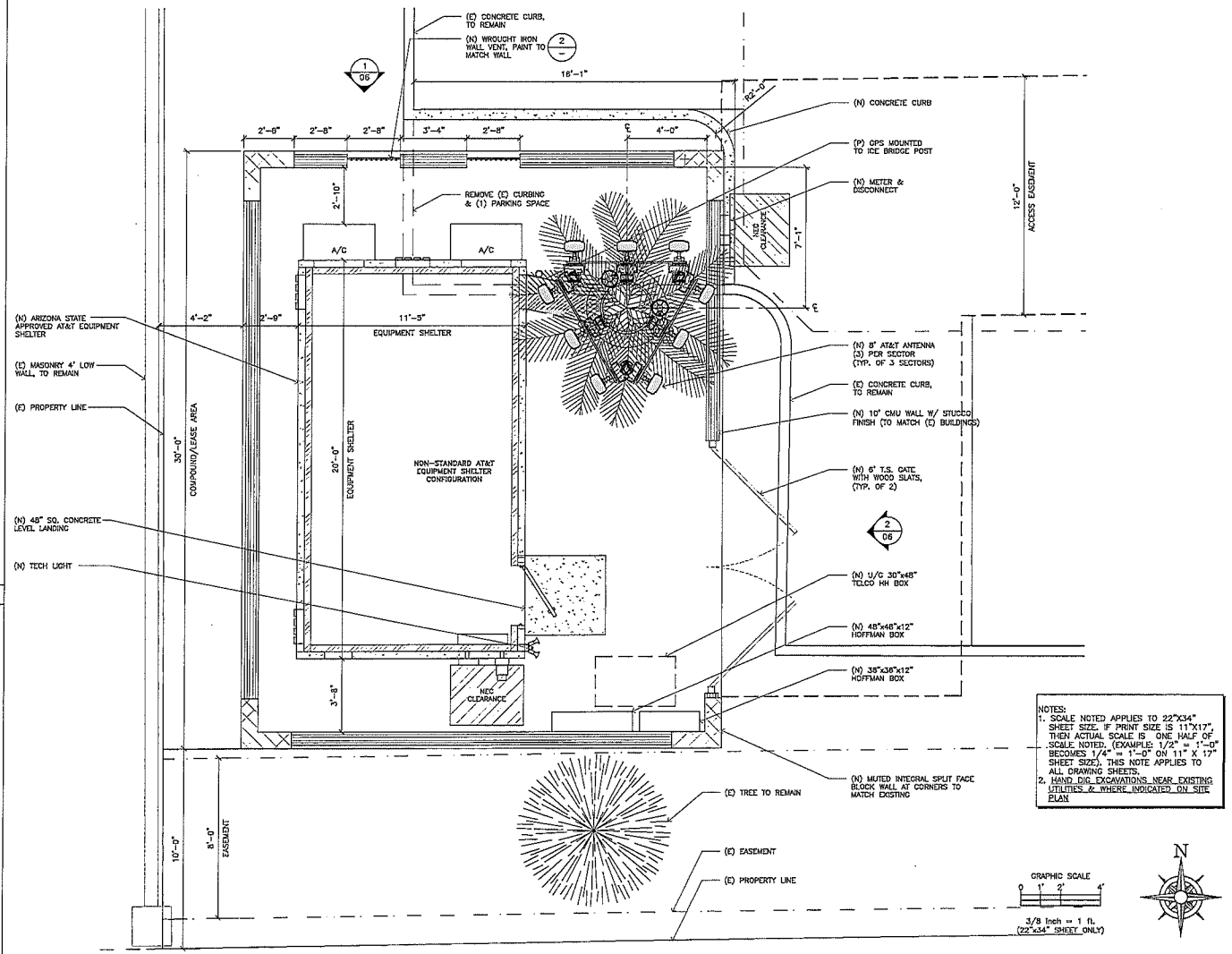

NOTES:
1. SCALE NOTED APPLIES TO 22"X34" SHEET SIZE. IF PRINT SIZE IS 11"X17", THEN ACTUAL SCALE IS ONE HALF OF SCALE NOTED. (EXAMPLE: 1/2" = 1'-0" BECOMES 1/4" = 1'-0" ON 11" X 17" SHEET SIZE). THIS NOTE APPLIES TO ALL DRAWING SHEETS.
2. HAND DIG EXCAVATIONS NEAR EXISTING UTILITIES & WHERE INDICATED ON SITE PLAN

DETAILED PLAN SCALE: 3/8" 1'-0" | 1

Clear Blue Services
11811 E. 46TH ST, STE B-210
PHOENIX, AZ 85044 602-426-8999

BECHTEL COMMUNICATIONS, INC.
2075 W PINNACLE PEAK RD. SUITE 110
PHOENIX, AZ 85027
PHONE: (623) 282-3091

W550-CC
PRESIDIO
1120 S DOBSON RD
CHANDLER, AZ 85286

at&t
AT&T MOBILITY
20830 N. TATUM BLVD. SUITE 400
PHOENIX, AZ 85050

NO.	DATE	REVISIONS	BY	CHK	APP'D
1	10/10/12	CITY COMMENTS	JM	SD	AL
0	09/14/12	ZONING DRAWINGS	JH	SD	AL

SCALE: AS SHOWN DESIGNED BY: CB DRAWN BY: JH

REGISTERED ARCHITECT CERTIFICATE NO. 32374 STEVEN L. DEJONGE, ARIZONA U.S.A. EXPIRES 9-30-2013

THIS DOCUMENT CONTAINS AN ELECTRONIC SIGNATURE PURSUANT TO A.R.S. TITLE 41 AND TITLE 44. IT IS A VIOLATION FOR ANY PERSON, UNLESS UNDER THE DIRECT SUPERVISION OF THE REGISTRANT, TO MODIFY THIS DOCUMENT IN ANY WAY.

PRELIMINARY UNLESS SIGNED

AT&T MOBILITY

DETAILED PLAN

FA CODE	DRAWING NUMBER	REV
10567328	25736-625-FC6-W550-CC-05	1

22 x 34 'D' SIZE

PSC= : :

NOTES:

1. RAYCAP VIA AT&T SUPPLIES THE DC6 OVER VOLTAGE PROTECTOR AND PIPE MOUNTING BRACKETS. SUBCONTRACTOR SHALL SUPPLY THE PIPE.

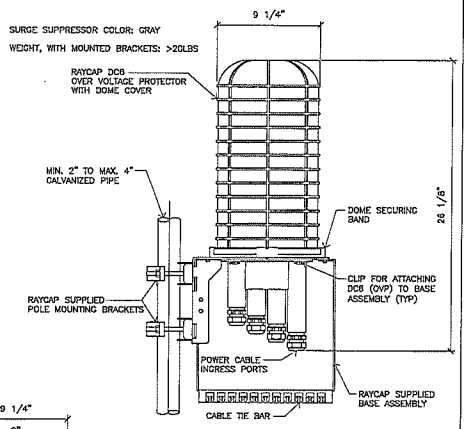

RAYCAP DC6-48-60-18-8F
DC POWER OVER VOLTAGE PROTECTOR (OVP)
POLE MOUNT BASE ASSEMBLY

DETAIL 1116 / NTS

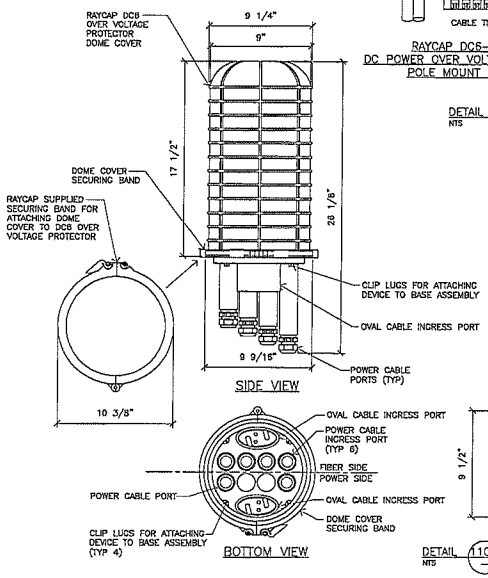

DETAIL 1102 / NTS

RAYCAP DC6-48-60-18-8F DETAIL N.T.S. | 6

NEW ANTENNAS

(1) = UMTS ANTENNA
(2) = UMTS ANTENNA
(3) = LTE ANTENNA

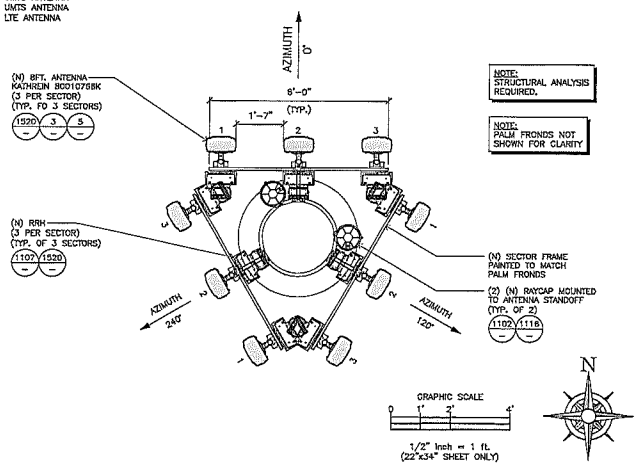

NOTE: STRUCTURAL ANALYSIS REQUIRED.

NOTE: PALM FRONDS NOT SHOWN FOR CLARITY

NEW ANTENNA PLAN VIEW SCALE: 1/2" = 1'-0" | 4

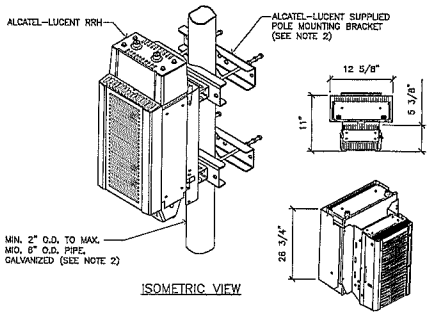

ISOMETRIC VIEW

NOTES:

1. ALCATEL-LUCENT (ALU) VIA AT&T SUPPLIES RRH. RRH POLE-MOUNTING BRACKET. SUBCONTRACTOR SHALL SUPPLY POLE/PIPE AND INSTALL ALL MOUNTING HARDWARE INCLUDING ALU RRH POLE-MOUNTING BRACKET. ALU INSTALLS RRH AND MAKES CABLE TERMINATIONS.
2. FOR POLE DIAMETERS FROM 6" TO 15", ALCATEL-LUCENT CAN SUPPLY A PAIR OF POLE MOUNTING METAL BANDS WITH BOLTING WELDMENT.

ALCATEL-LUCENT 9442
REMOTE RADIO HEAD (RRH) POLE MOUNT

DETAIL 1107 / NTS

RRH MOUNTING DETAIL N.T.S. | 2

NEW ANTENNA CONFIGURATION TABLE

	POSITION (# OR N/A)	1	2	3
SECTOR A	ANTENNA	(N) KATHREIN 80010766K	(N) KATHREIN 80010766K	(N) KATHREIN 80010766K
	FEEDER LENGTH	±100FT FIBER	±100FT FIBER	±100FT FIBER
	AZIMUTH	0°	0°	0°
	RAD CENTER	58'	58'	58'
	TECHNOLOGY	UMTS	UMTS	LTE
	TMA	N/A	N/A	N/A
	RRH	(N) ACTIVE	(N) ACTIVE	(N) ACTIVE
SECTOR B	ANTENNA	(N) KATHREIN 80010766K	(N) KATHREIN 80010766K	(N) KATHREIN 80010766K
	FEEDER LENGTH	±100FT FIBER	±100FT FIBER	±100FT FIBER
	AZIMUTH	120°	120°	120°
	RAD CENTER	58'	58'	58'
	TECHNOLOGY	UMTS	UMTS	LTE
	TMA	N/A	N/A	N/A
	RRH	(N) ACTIVE	(N) ACTIVE	(N) ACTIVE
SECTOR C	ANTENNA	(N) KATHREIN 80010766K	(N) KATHREIN 80010766K	(N) KATHREIN 80010766K
	FEEDER LENGTH	±100FT FIBER	±100FT FIBER	±100FT FIBER
	AZIMUTH	240°	240°	240°
	RAD CENTER	58'	58'	58'
	TECHNOLOGY	UMTS	UMTS	LTE
	TMA	N/A	N/A	N/A
	RRH	(N) ACTIVE	(N) ACTIVE	(N) ACTIVE

ANTENNA CONFIGURATION TABLE | 5

NOTE: MOUNTING EQUIPMENT SUPPLIED W/ ANTENNA. INSTALL PER MANUFACTURER'S SPECIFICATIONS.

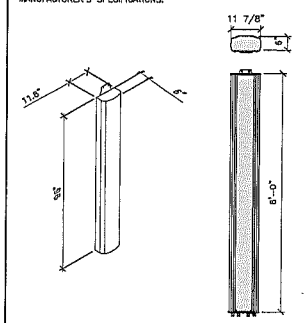

(N) ANTENNA
MANUFACTURER: KATHREIN
PART#: 80010766K
WEIGHT: 81.7 LBS (NET WEIGHT)

ANTENNA DETAIL(S) N.T.S. | 3

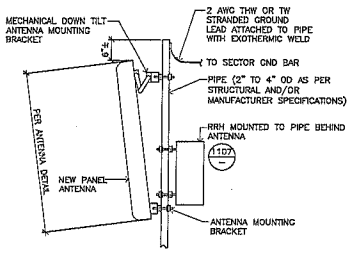

ANTENNA MOUNTING DETAIL

DETAIL 1520-M / NTS

ANTENNA MOUNTING DETAIL N.T.S. | 1

Clear Blue Services
11011 S. 48TH ST., STE# 210
PHOENIX, AZ 85044 602-420-0509

BECHTEL COMMUNICATIONS, INC.
2075 W PINNACLE PEAK RD. SUITE 110
PHOENIX, AZ 85027
PHONE: (623) 282-3091

W550-CC
PRESIDIO
1120 S DOBSON RD
CHANDLER, AZ 85286

at&t
AT&T MOBILITY
20830 N. TATUM BLVD. SUITE 400
PHOENIX, AZ 85050

NO.	DATE	REVISIONS	BY	CHK	APP'D
1	10/10/12	CITY COMMENTS	JM	SD	AL
0	08/14/12	ZONING DRAWINGS	JH	SD	AL

SCALE: AS SHOWN | DESIGNED BY: CB | DRAWN BY: JH

REGISTERED ARCHITECT CERTIFICATE NO. 32874 STEVEN L. DEGONDA ARIZONA U.S.A.
EXPIRES 6-30-2013

THIS DOCUMENT CONTAINS AN ELECTRONIC SIGNATURE PURSUANT TO A.R.S. TITLE 41 AND TITLE 44. IT IS A VIOLATION FOR ANY PERSON, UNLESS UNDER THE DIRECT SUPERVISION OF THE RECIPIENT, TO MODIFY THIS DOCUMENT IN ANY WAY.

PRELIMINARY UNLESS SIGNED

AT&T MOBILITY

TOWER ELEVATIONS & DETAILS

FA CODE	DRAWING NUMBER	REV
10567328	25736-625-FC6-W550-CC-07	1

22 x 34 'D' SIZE

PSC=

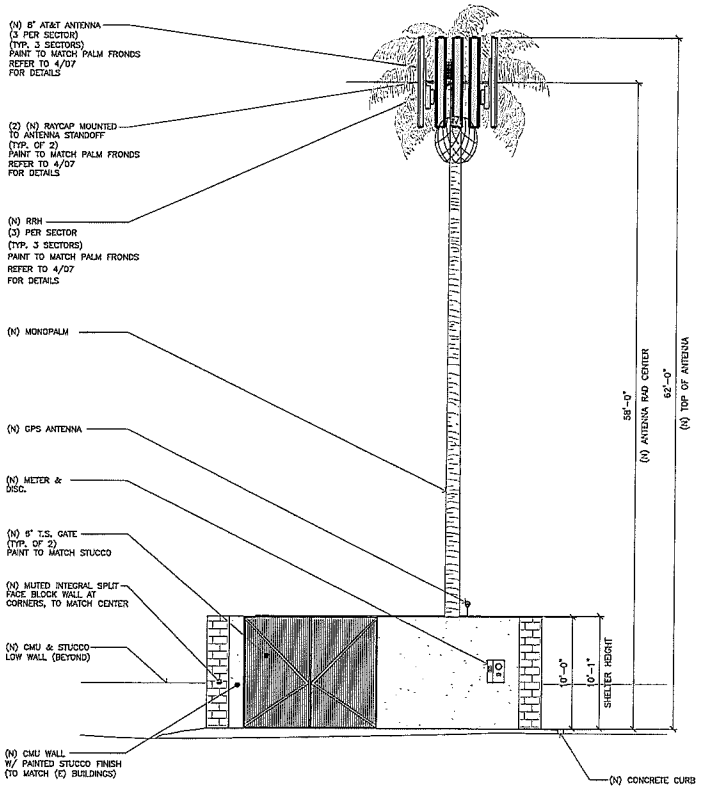

EAST ELEVATION

SCALE: 3/16" = 1'-0" | 2

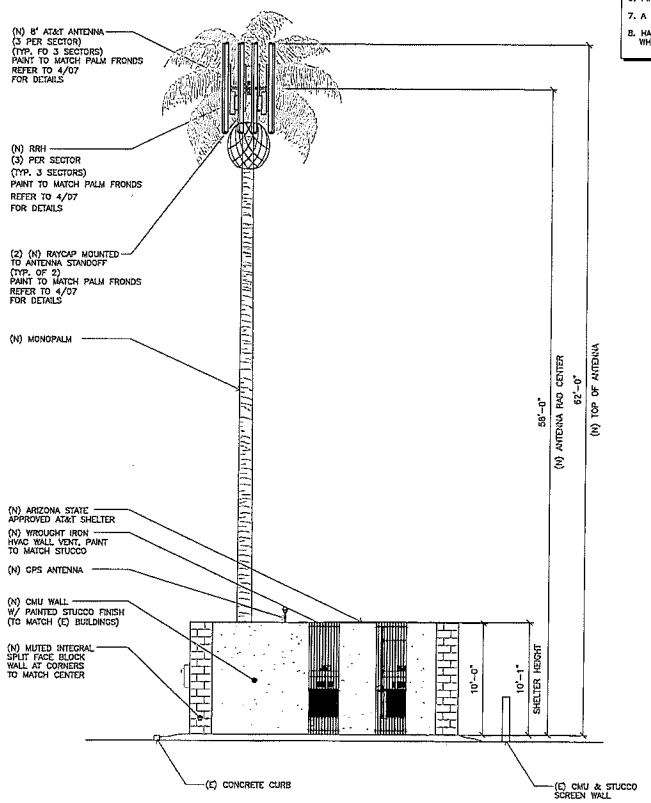

NORTH ELEVATION

SCALE: 3/16" = 1'-0" | 1

NOTES:

1. CONTRACTOR TO COORDINATE & PROVIDE PRIVATE LOCATING SERVICE PRIOR TO CONSTRUCTION.
2. ANTENNAS NOT TO EXTEND BEYOND PALM FRONDS.
3. ANTENNAS AND MOUNTING HARDWARE PAINTED TO MATCH FRONDS
4. ALL CABLING TO RUN INSIDE MONOPALM
5. FAUX BARK CLADDING TO COVER ENTIRE POLE
6. PIPE MOUNTS MAY NOT EXTEND PAST ANTENNAS
7. A MINIMUM OF 65 10FT. FRONDS ARE REQUIRED
8. HAND DIG EXCAVATIONS NEAR EXISTING UTILITIES AND WHERE INDICATED ON SITE PLAN.

Clear Blue Services
11011 S. 46TH ST, STE# 210
PHOENIX, AZ 85044 (623)-425-0500

BECHTEL COMMUNICATIONS, INC.
2075 W PINNACLE PEAK RD. SUITE 110
PHOENIX, AZ 85027
PHONE: (623) 282-3091

W550-CC
PRESIDIO
1120 S DOBSON RD
CHANDLER, AZ 85286

at&t
AT&T MOBILITY
20830 N. TATUM BLVD. SUITE 400
PHOENIX, AZ 85050

NO.	DATE	REVISIONS	BY	CHK	APP'D
1	10/10/12	CITY COMMENTS	JM	SD	AL
0	09/14/12	ZONING DRAWINGS	JH	SD	AL

SCALE: AS SHOWN | DESIGNED BY: GB | DRAWN BY: JH

REGISTERED ARCHITECT
CERTIFICATE NO. 32374
STEVEN L. DEJONGE
Date Signed 10/11/12
EXPIRES 9-30-2013

THIS DOCUMENT CONTAINS AN ELECTRONIC SIGNATURE PURSUANT TO A.R.S. TITLE 41 AND TITLE 44. IT IS A VIOLATION FOR ANY PERSON, UNLESS UNDER THE DIRECT SUPERVISION OF THE REGISTRANT, TO MODIFY THIS DOCUMENT IN ANY WAY.

PRELIMINARY UNLESS SIGNED

AT&T MOBILITY

TOWER ELEVATIONS

FA CODE	DRAWING NUMBER	REV
10567328	25736-625-FC6-W550-CC-06	1

22 x 34 "D" SIZE

PSC= : :