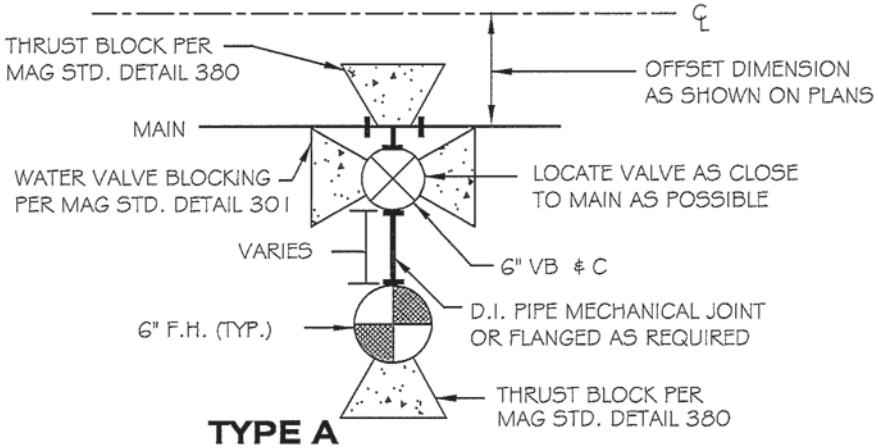

TYPE A

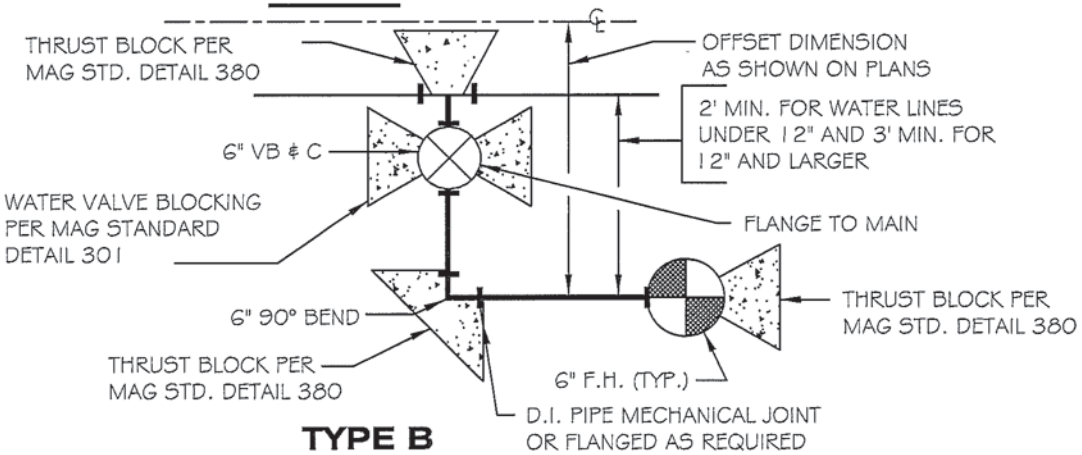

TYPE B

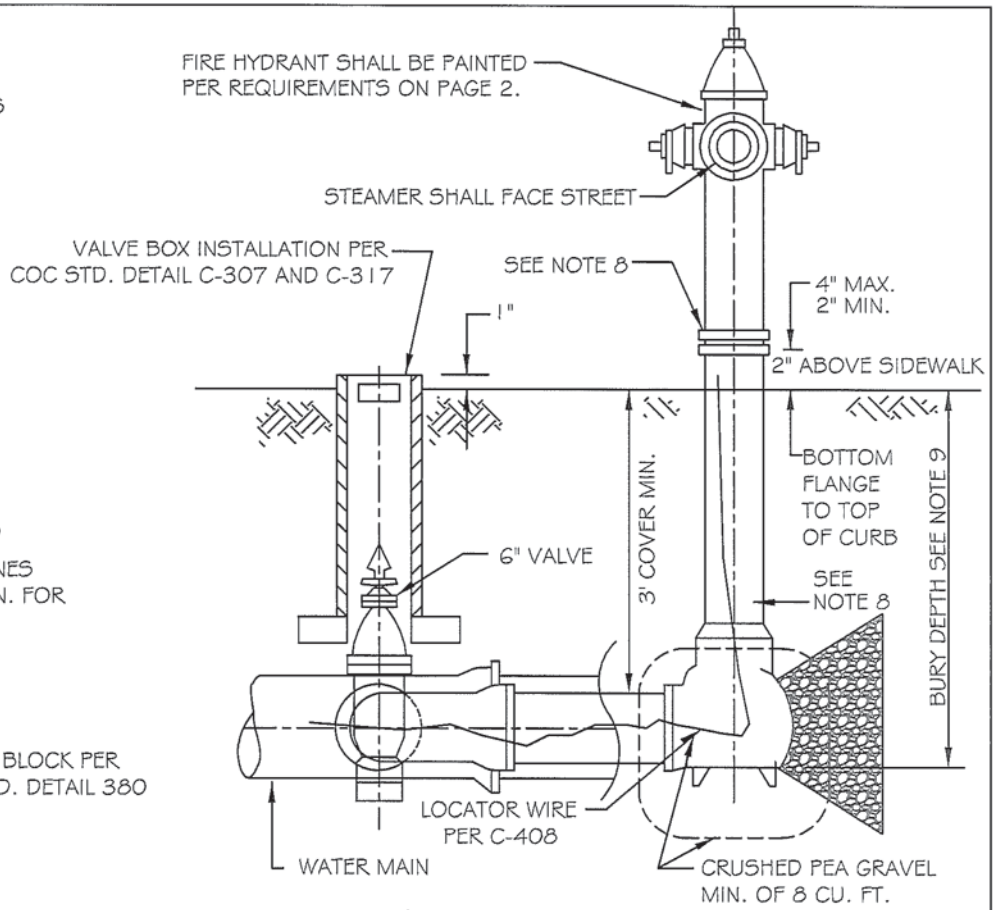

TYPICAL INSTALLATION

NOTES:

1. FIRE HYDRANT VALVES INCLUDING ALL FITTINGS & 45° BENDS SHALL BE RESTRAINED TO MAIN LINE TEE BY FLANGES.
2. FIRE HYDRANT SHALL BE PER CITY LIST OF APPROVED PRODUCTS.
3. CONNECTIONS SHALL BE 2-1/2" & 4-1/2" N.S. THREADS.
4. INSTALLATION OF HYDRANT SHALL INCLUDE INSTALLATION OF REFLECTOR ON ADJACENT STREET(S) PER MAG STD DTL 122.
5. FIRE HYDRANT SHALL BE LOCATED PER DETAIL C-305 A MIN. OF 6' BEHIND FACE OF CURB, AND 12 INCHES BEHIND SIDEWALK, RIGHT OF WAY PERMITTING, AND INSTALLED SIX FEET BEYOND CURB RETURNS FOR HYDRANTS LOCATED AT INTERSECTIONS.
6. ~~INSTALL FIRE HYDRANT LOCK PER CITY LIST OF APPROVED PRODUCTS.~~
7. CAP CHAINS SHALL BE REMOVED AND THREADS GREASED WITH MANUFACTURER APPROVED HYDRANT GREASE.
8. EXTENSIONS ARE NOT ALLOWED.
9. STANDARD BURY DEPTHS ARE 36", 48", AND 54". ALL FITTINGS BETWEEN FH VALVE AND 6" HYDRANT RUNOUT SHALL BE RESTRAINED BY FLANGES.

Renumber 7,8,9

DETAIL NO.				
C-303	CHANDLER STANDARD DETAIL	**FIRE HYDRANT INSTALLATION**	APPROVED: CITY ENGINEER DATE: 07-09-2015	**C-303**
PAGE 1 OF 2				PAGE 1 OF 2

COLOR CODE

THE CITY OF CHANDLER WATER DIVISION AND FIRE DEPARTMENT UTILIZE THE FOLLOWING COLOR CODE IN DISTINGUISHING THE VARIOUS TYPES OF FIRE HYDRANTS:

Type 1 CAT YELLOW: THE BARREL AND BONNET OF ALL FIRE HYDRANTS INSTALLED ON PUBLIC WATER MAINS IN RIGHTS-OF-WAY AND IN PUBLIC UTILITY EASEMENTS (PUE'S) SHALL BE PAINTED CAT YELLOW.

Type 2 GLOSS BLACK/CAT YELLOW: THE BONNET OR 3" DOWN OF ALL FIRE HYDRANTS INSTALLED ON PRIVATELY OWNED AND MAINTAINED WATER MAINS SHALL BE PAINTED GLOSS BLACK. THE BARREL SHALL BE PAINTED CAT YELLOW.

Type 3 BRILLIANT RED: THE BARREL AND BONNET SHALL BE PAINTED BRILLIANT RED AFTER THE FIRE DEPARTMENT CONNECTIONS (FDC'S). SPECIAL APPROVAL IS REQUIRED FOR ALL RED HYDRANTS BY THE FIRE MARSHAL. FIRE DEPARTMENT SIAMESE CONNECTIONS (FDC'S). ALL SUCH FIRE HYDRANTS SHALL BE ISOLATED FROM THE MUNICIPAL WATER SYSTEM BY DOUBLE DETECTOR CHECK VALVES. ALL RED HYDRANTS SHALL BE APPROVED BY THE FIRE MARSHAL.

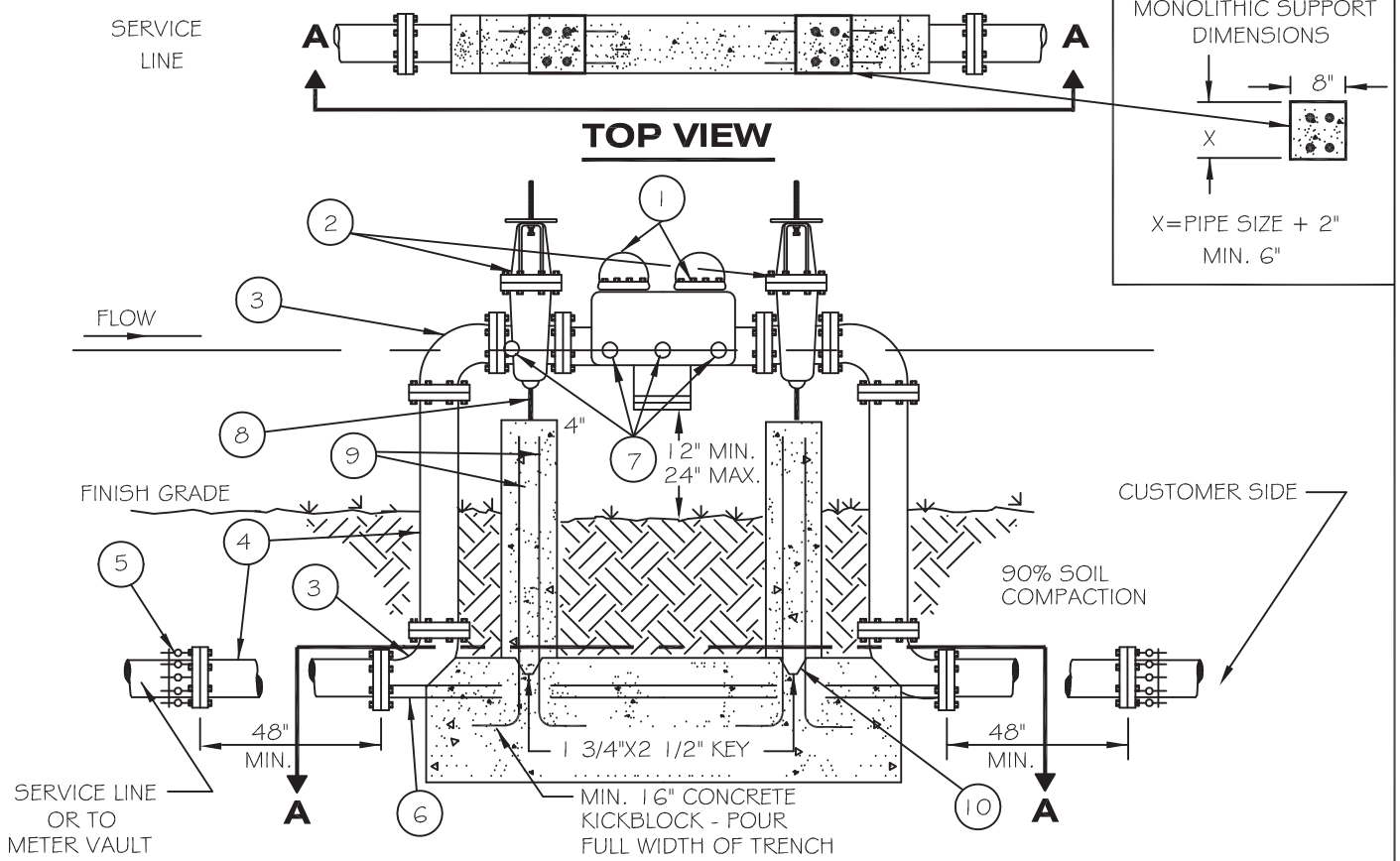

LIST OF MATERIALS

1. APPROVED REDUCED PRESSURE PRINCIPLE BACKFLOW PREVENTION ASSEMBLY.
2. O.S.&Y. GATE VALVE, N.R.S. GATE VALVE, IF PREFERRED.
3. 90° ELL. (FLANGED D.I.P.)
4. PIPE SPOOL (FLANGED D.I.P.)
5. FLANGED ADAPTER (WHEN REQUIRED).
6. 3/4" ZINC COATED THREADED ROD, BOLTED TO FLANGES AS SHOWN, BOTH SIDES TYPICAL EQUAL TENSION.
7. TEST COCKS (4 REQUIRED WITH BRASS PLUGS USING ONLY TEFLON TAPE.)
8. ADJUSTABLE PIPE SUPPORT MUST BE PERMANENTLY ATTACHED TO BASE, 6" MAXIMUM HEIGHT.
9. #6 REINFORCING STEEL, DEFORMED BAR, 4" APART, EVENLY SPACED.
10. CONSTRUCTION JOINT KEY TO BE 1 3/4" X 2 1/2".

NOTES:

1. LIST OF LATEST APPROVED ASSEMBLIES ON FILE AT ENGINEERING. COPIES AVAILABLE.
2. ASSEMBLY SHALL BE AS APPROVED BY UNIVERSITY OF SOUTHERN CALIFORNIA (USC) FOUNDATION FOR CROSS-CONNECTION CONTROL AND HYDRAULIC RESEARCH.
3. ABOVE GROUND PORTION OF ASSEMBLY TO BE PAINTED LIGHT TAN OR EQUIVALENT BACKGROUND COLOR.
4. WHEN UTILIZED FOR RECLAIMED WATER, THE WORDS 'RECLAIMED WATER' SHALL BE STENCILED ON THE ASSEMBLY USING THE COLOR 'SAFETY
5. BACKFLOW PREVENTION ASSEMBLY SHALL E AS PRACTICABLE TO THE POTABLE WATER ME
6. BACKFLOW PREVENTION ASSEMBLY SHALL A AS THE METER BUT NO MORE THAN ONE SIZE LARGER THAN THE METER.

REDUCED PRESSURE PRINCIPLE
BACKFLOW PREVENTION - 4" AND LARGER

SCREENING METHOD

1. SCREEN WALLS, PLANT MATERIAL, BERMING AND/OR BUILDING ORIENTATION SHALL BE SUBMITTED TO DEVELOPMENT SERVICES FOR REVIEW AND APPROVAL PRIOR TO START OF CONSTRUCTION.

DETAIL NO.					DETAIL NO.
C-315	CITY OF CHANDLER STANDARD DETAIL	~~REDUCED PRESSURE PRINCIPLE ASSEMBLY~~ ~~3", 4", 6", 8", 10"~~	APPROVED: CITY ENGINEER		C-315
NTS			DATE: 3/14/2013		NTS

RECLAIMED WATER SERVICE CONNECTIONS SIZING TABLE

SERVICE CONNECTION FLOW RATE (GPM)	IRRIGATION SERVICE LINE SIZE (AFTER PUMP)	RECLAIMED WATER SERVICE CONNECTION LINE SIZE (FROM MAIN TO PUMP)	WET WELL PUMP SEE PAGES:	CAN PUMP SEE PAGES:
UP TO 80	2"	~~3"~~ 4"	PAGE 3	-
80 TO 170	3"	4"	PAGE 4	-
170 TO 300	4"	6"	PAGES 5 & 6	PAGES 9 & 10
300 TO 700	6"	8"	PAGES 7 & 8	PAGES 11 & 12

NOTES:

1. THE DATA FORM ON DETAIL C-404 PAGE 2 MUST BE COMPLETED AND SUBMITTED WITH THE BUILDING PERMIT APPLICATION FOR THE INLINE PUMP AND CAN PUMP SERVICE CONNECTIONS.
2. THESE RECLAIMED WATER SERVICE CONNECTION DETAILS PRESENT THE MINIMUM REQUIREMENTS TO ENSURE THE INTEGRITY OF THE CITY OF CHANDLER'S RECLAIMED WATER DISTRIBUTION SYSTEM. ALL RECLAIMED WATER SERVICE CONNECTIONS MUST BE DESIGNED IN ACCORDANCE WITH THESE DETAILS AND THE SITE-SPECIFIC REQUIREMENTS INCLUDING: THE GROUND ELEVATION, IRRIGATION SYSTEM FLOW REQUIREMENTS, AND IRRIGATION SYSTEM PRESSURE REQUIREMENTS.
3. ALL RECLAIMED WATER SERVICE CONNECTIONS SHALL BE DESIGNED IN ACCORDANCE WITH MARICOPA COUNTY ENVIRONMENTAL SERVICES DEPARTMENT (MCESD) AND ARIZONA DEPARTMENT OF ENVIRONMENTAL QUALITY (ADEQ) REQUIREMENTS.
4. AN APPROVAL TO CONSTRUCT PERMIT FROM MCESD IS REQUIRED FOR ALL RECLAIMED WATER SERVICE CONNECTIONS PRIOR TO CONSTRUCTION. A COPY OF THE APPROVAL OF CONSTRUCTION FROM MCDES MUST BE SUBMITTED TO THE CITY OF CHANDLER PRIOR TO PLACING THE RECLAIMED WATER SERVICE CONNECTION IN SERVICE.
5. ALL ABOVE GROUND PIPING SHALL BE PAINTED PURPLE OR STENCILED IN ACCORDANCE WITH MARICOPA ASSOCIATION OF GOVERNMENTS (MAG) STANDARDS SECTION 616.4.2.

4"

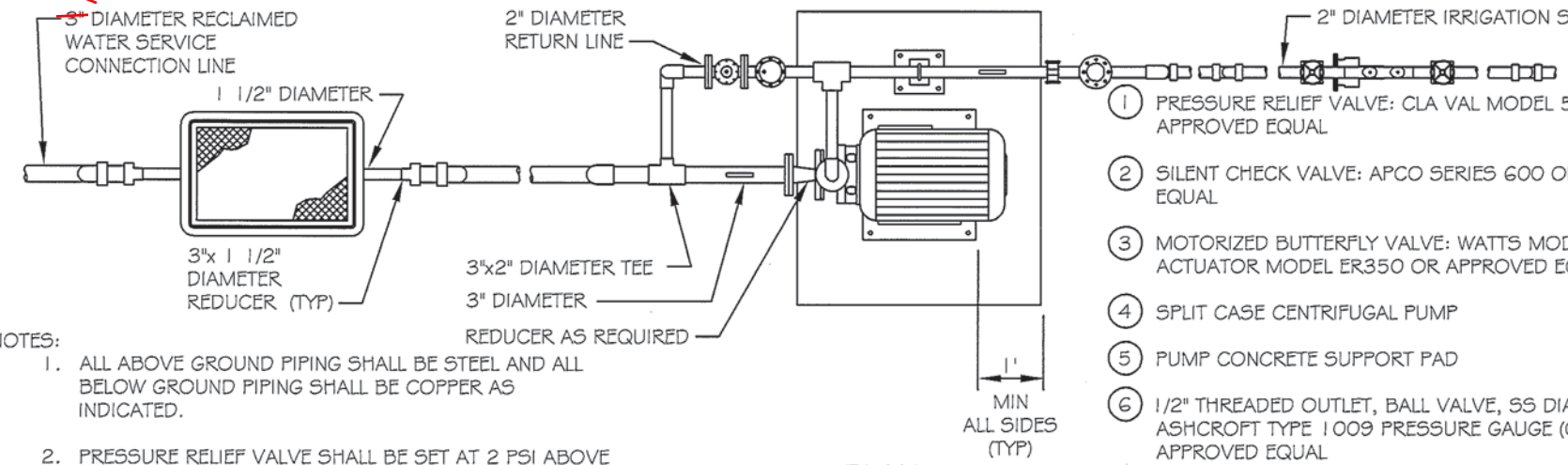

PLAN

1. PRESSURE RELIEF VALVE: CLA VAL MODEL 50-01 OR APPROVED EQUAL
2. SILENT CHECK VALVE: APCO SERIES 600 OR APPROVED EQUAL
3. MOTORIZED BUTTERFLY VALVE: WATTS MODEL BF-03 WITH ACTUATOR MODEL ER350 OR APPROVED EQUAL
4. SPLIT CASE CENTRIFUGAL PUMP
5. PUMP CONCRETE SUPPORT PAD
6. 1/2" THREADED OUTLET, BALL VALVE, SS DIAPHRAGM, AND ASHCROFT TYPE 1009 PRESSURE GAUGE (0-150 PSI) OR APPROVED EQUAL
7. PIPE SUPPORT: B-LINE FIGURE B3088T, B3089, AND B3090 OR APPROVED EQUAL
8. AIR RELEASE VALVE: APCO MODEL 50 WITH 1/2" THREADED INLET OR APPROVED EQUAL

NOTES:

1. ALL ABOVE GROUND PIPING SHALL BE STEEL AND ALL BELOW GROUND PIPING SHALL BE COPPER AS INDICATED.
2. PRESSURE RELIEF VALVE SHALL BE SET AT 2 PSI ABOVE SPRINKLER DESIGN PRESSURE.
3. DEVELOPER SHALL PROVIDE UTILITY SERVICES TO THE FACILITY AS REQUIRED.
4. DEVELOPER MAY USE VARIABLE FREQUENCY DRIVE WITH PUMP IN LIEU OF RETURN LINE.
5. DEVELOPER SHALL INTERLOCK MOTORIZED BUTTERFLY VALVE TO OPEN/CLOSE ON PUMP START/STOP.

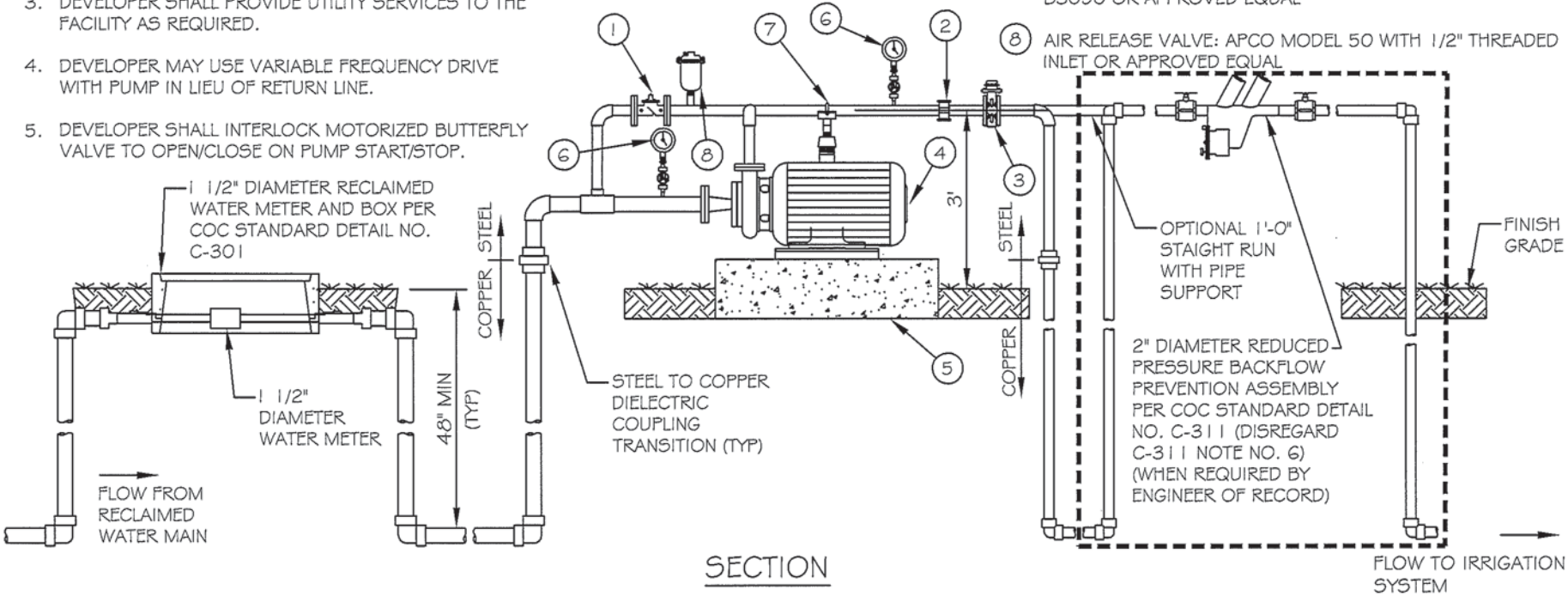

SECTION

DETAIL NO. C-404 PAGE 3 OF 12	CITY OF CHANDLER STANDARD DETAIL	**2" RECLAIMED WATER IRRIGATION SERVICE LINE INLINE PUMP TYPE**	APPROVED: CITY ENGINEER DATE: 1-9-14	DETAIL NO. C-404 PAGE 3 OF 12