STREETS
C-200 TO C-259

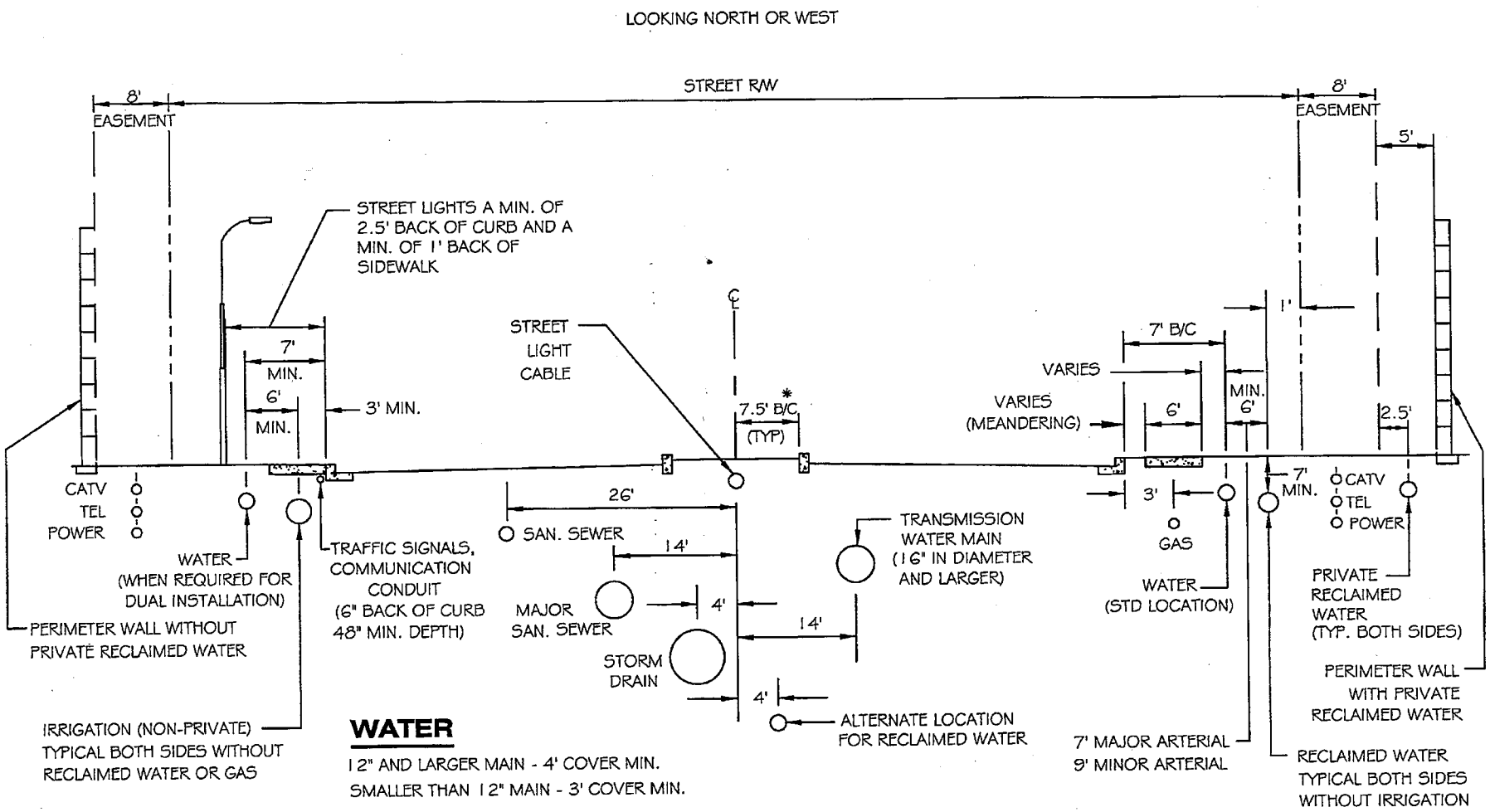

NOTES:

1. STREET LIGHTS SHALL BE LOCATED A MINIMUM OF 1' BACK OF SIDEWALK UNLESS OTHERWISE APPROVED.
2. PRIVATE RECLAIMED WATER LINES SHALL BE OUTSIDE OF PUBLIC RIGHT OF WAY.
3. * 20 FOOT HALF MEDIAN FOR PHASED ARTERIALS. SEE C.O.C. STANDARD DETAIL NO. C-204.
4. PROVIDE IRRIGATION SLEEVE, MEDIAN TO MEDIAN, 2 NOMINAL SIZES LARGER THAN MAIN, CENTERED.

DETAIL NO. C-200 NTS	CITY OF CHANDLER STANDARD DETAIL	STANDARD UTILITY LOCATIONS ARTERIAL STREETS	APPROVED: CITY ENGINEER DATE: 01/08/09	DETAIL NO. C-200 NTS

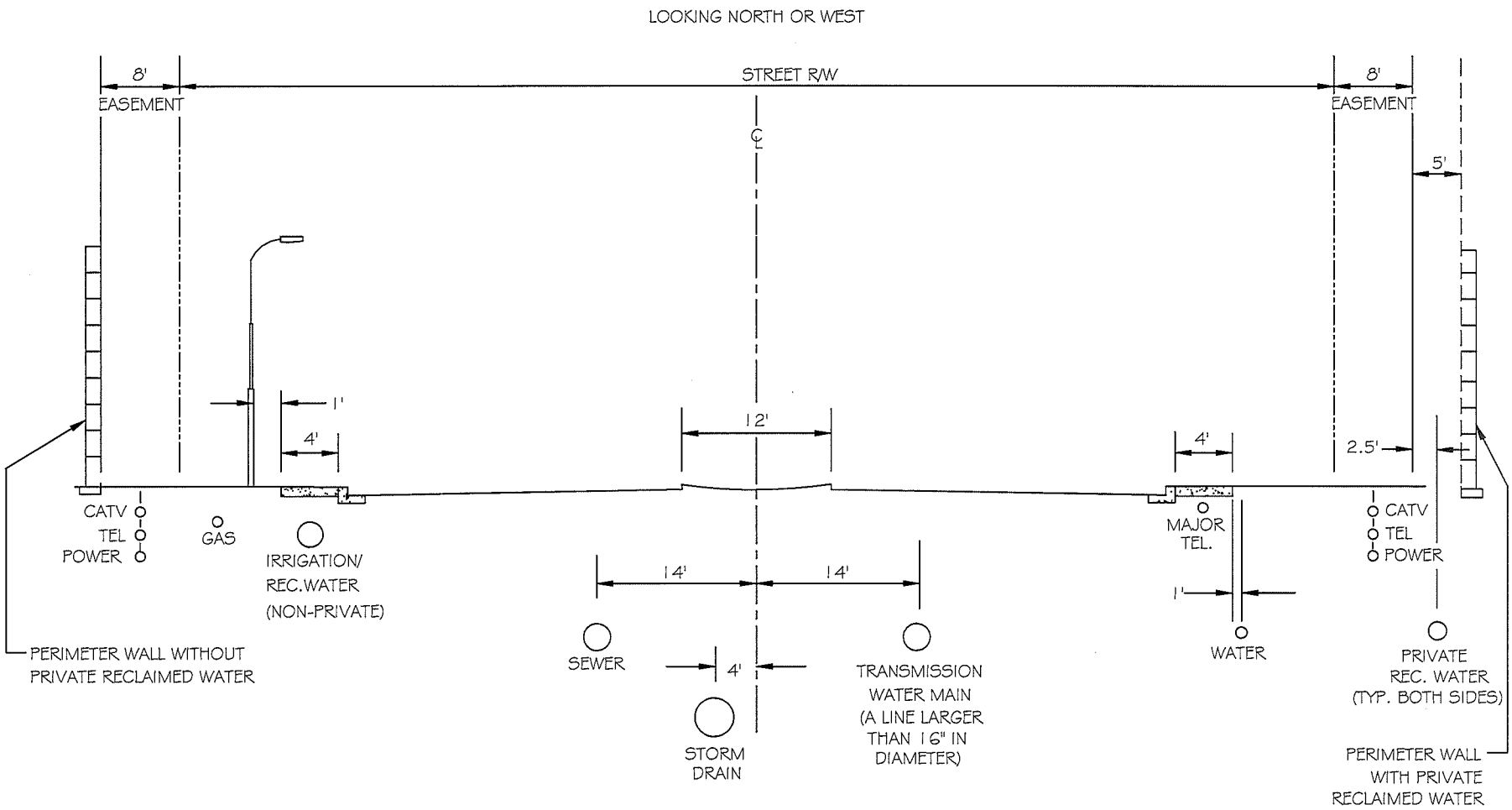

NOTE:

WHEN IN THE BEST INTEREST OF THE CITY, THE PUBLIC WORKS DIRECTOR, OR DESIGNEE, MAY WAIVE SIDEWALK ON ONE SIDE OF ROADWAY IN INDUSTRIAL AREAS.

DETAIL NO.					
C-201 NTS	CITY OF CHANDLER STANDARD DETAIL	**STANDARD UTILITY LOCATIONS COLLECTOR STREETS**	APPROVED: CITY ENGINEER DATE: 07-09-2015	DETAIL NO. **C-201** NTS

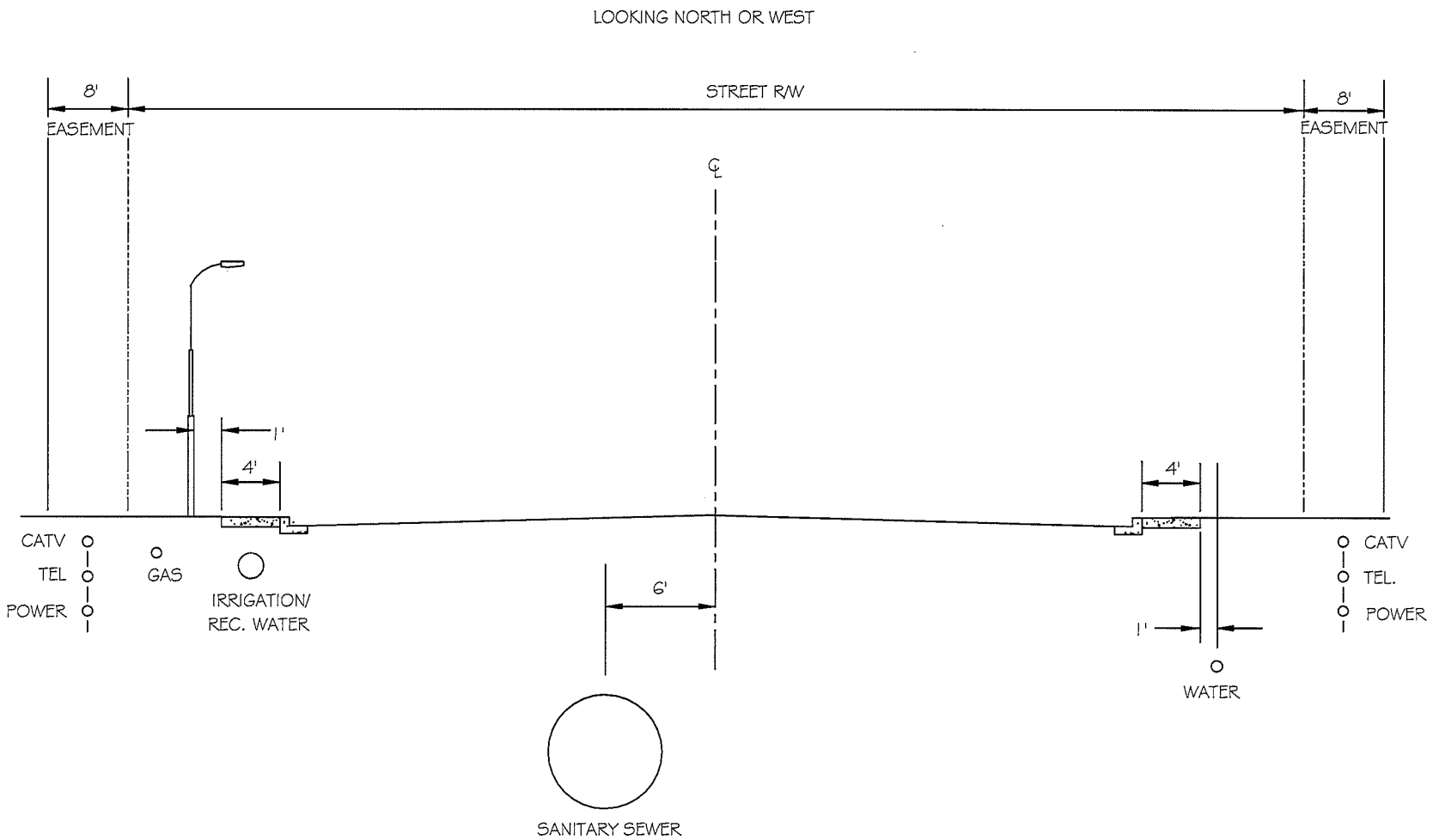

DETAIL NO.					DETAIL NO.
C-202 NTS	CITY OF CHANDLER STANDARD DETAIL	**STANDARD UTILITY LOCATIONS LOCAL STREETS**	APPROVED: CITY ENGINEER DATE: 07-09-2015		**C-202** NTS

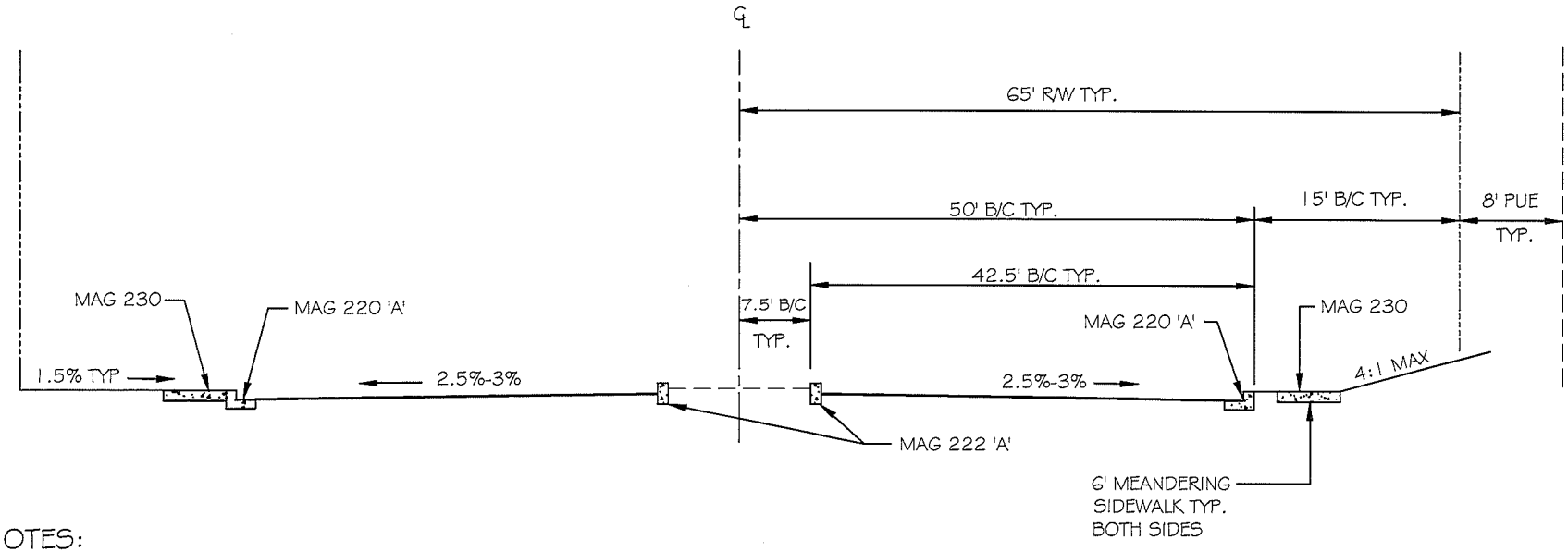

NOTES:

1. THE SUBGRADE SHALL BE PREPARED IN ACCORDANCE WITH MAG STANDARD SPECIFICATIONS, SEC. 301.
2. BASE COURSE:
   A. THE THICKNESS SHALL CONFORM TO COC STANDARD DETAIL C-239.
   B. ALL CONSTRUCTION AND MATERIALS SHALL CONFORM TO MAG STANDARD SPECIFICATIONS, SECS. 310 AND 702.
3. ASPHALTIC CONCRETE PAVEMENT:
   A. 3" THICK A19 OR A25 EVAC BASE COURSE WITH 2" OF A12.5 EVAC SURFACE COURSE.
   B. ALL CONSTRUCTION AND MATERIALS SHALL CONFORM TO EVAC AND MAG STANDARD SPECIFICATIONS, SECS. 321 AND 710.
4. ADDITIONAL RIGHT-OF-WAY SHALL BE PROVIDED WHERE NECESSARY TO ACCOMMODATE DOUBLE LEFT TURN LANES OR RIGHT TURN LANES WARRANTED BY TRAFFIC DEMANDS.
5. MEDIAN END SHALL BE RAMP PER COC STANDARD DETAIL C-225.
6. MEDIAN LANDSCAPE AREA SHALL BE PER COC STANDARD DETAIL C-807 (MOUNDING IN MEDIAN NOT PERMITTED).

DETAIL NO.				
C-203 NTS	CITY OF CHANDLER STANDARD DETAIL	**MAJOR ARTERIAL STREET TYPICAL CROSS SECTION**	APPROVED: CITY ENGINEER DATE: 07-09-2015	DETAIL NO. **C-203** NTS

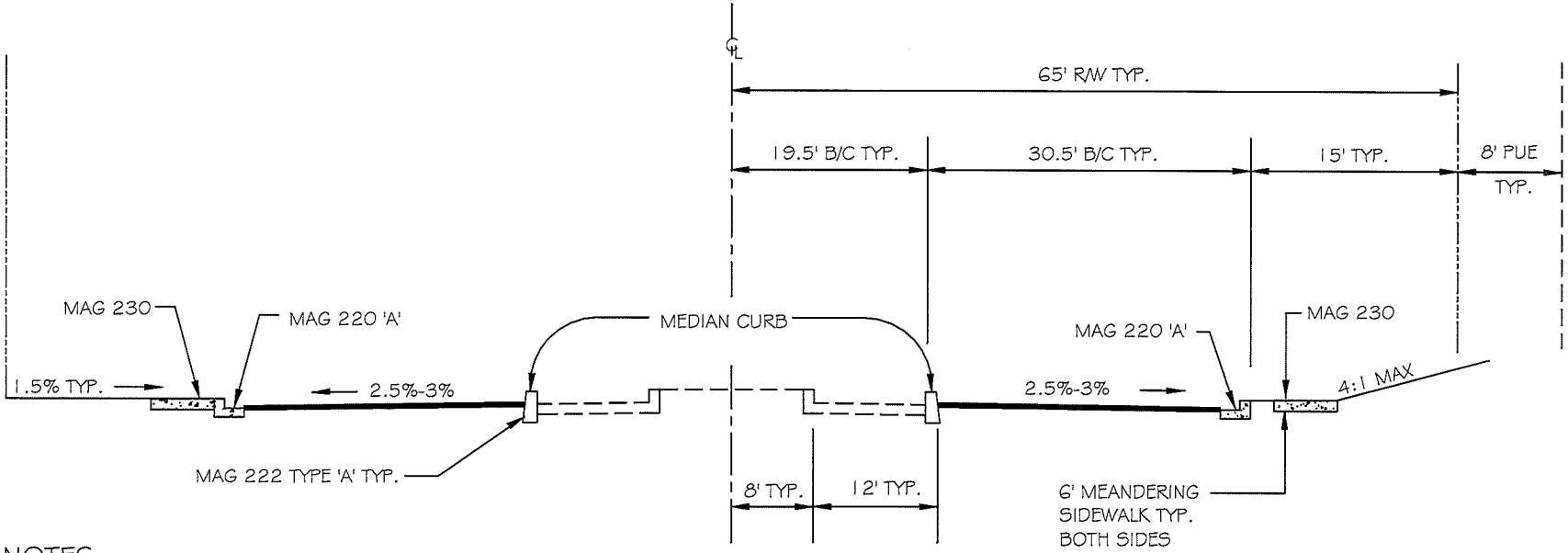

NOTES:

1. THE SUBGRADE SHALL BE PREPARED IN ACCORDANCE WITH MAG STANDARD SPECIFICATIONS, SEC. 301.
2. BASE COURSE:
   A. THE THICKNESS SHALL CONFORM TO COC STANDARD DETAIL C-239.
   B. ALL CONSTRUCTION AND MATERIALS SHALL CONFORM TO MAG STANDARD SPECIFICATIONS, SECS. 310 AND 702.
3. ASPHALTIC CONCRETE PAVEMENT:
   A. 3" THICK A19 OR A25 EVAC BASE COURSE WITH 2" OF A12.5 EVAC SURFACE COURSE.
   B. ALL CONSTRUCTION AND MATERIALS SHALL CONFORM TO EVAC AND MAG STANDARD SPECIFICATIONS, SECS. 321 AND 710.
4. ADDITIONAL RIGHT-OF-WAY SHALL BE PROVIDED WHERE NECESSARY TO ACCOMMODATE DOUBLE LEFT TURN LANES OR RIGHT TURN LANES WARRANTED BY TRAFFIC DEMANDS.
5. MEDIAN LANDSCAPE AREA SHALL BE PER COC STANDARD DETAIL C-807 (MOUNDING IN MEDIAN NOT PERMITTED).
6. 0.2% MINIMUM LONGITUDINAL GRADE ALLOWED.

DETAIL NO.					DETAIL NO.
C-204	CITY OF CHANDLER STANDARD DETAIL	**PHASED MAJOR ARTERIAL STREET TYPICAL CROSS SECTION**	APPROVED: CITY ENGINEER		**C-204**
NTS			DATE: 07-09-2015		NTS

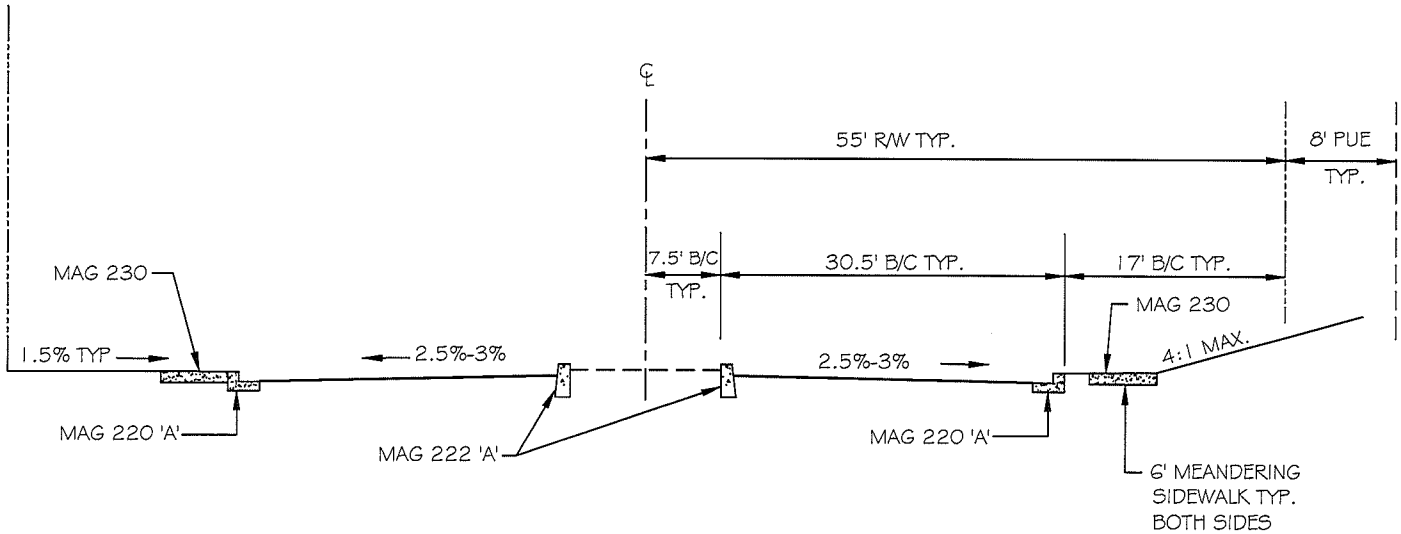

NOTES:

1. THE SUBGRADE SHALL BE PREPARED IN ACCORDANCE WITH MAG STANDARD SPECIFICATIONS, SEC. 301.
2. BASE COURSE:
   A. THE THICKNESS SHALL CONFORM TO COC STANDARD DETAIL C-239.
   B. ALL CONSTRUCTION AND MATERIALS SHALL CONFORM TO MAG STANDARD SPECIFICATIONS, SECS. 310 AND 702.
3. ASPHALTIC CONCRETE PAVEMENT:
   A. 3" THICK A19 OR A25 EVAC BASE COURSE WITH 2" OF A12.5 EVAC SURFACE COURSE.
   B. ALL CONSTRUCTION AND MATERIALS SHALL CONFORM TO EVAC AND MAG STANDARD SPECIFICATIONS, SECS. 321 AND 710.
4. ADDITIONAL RIGHT-OF-WAY SHALL BE PROVIDED WHERE NECESSARY TO ACCOMMODATE DOUBLE LEFT TURN LANES OR RIGHT TURN LANES WARRANTED BY TRAFFIC DEMANDS.
5. RAMP END OF MEDIAN PER COC STANDARD DETAIL C-225.
6. MEDIAN LANDSCAPE AREA SHALL BE PER COC STANDARD DETAIL C-807 (MOUNDING IN MEDIAN NOT PERMITTED).
7. 0.2% MINIMUM LONGITUDINAL GRADE ALLOWED.

DETAIL NO.					DETAIL NO.
C-205 NTS	CITY OF CHANDLER STANDARD DETAIL	**MINOR ARTERIAL STREET TYPICAL CROSS SECTION**	APPROVED: CITY ENGINEER DATE: 07-09-2015		**C-205** NTS

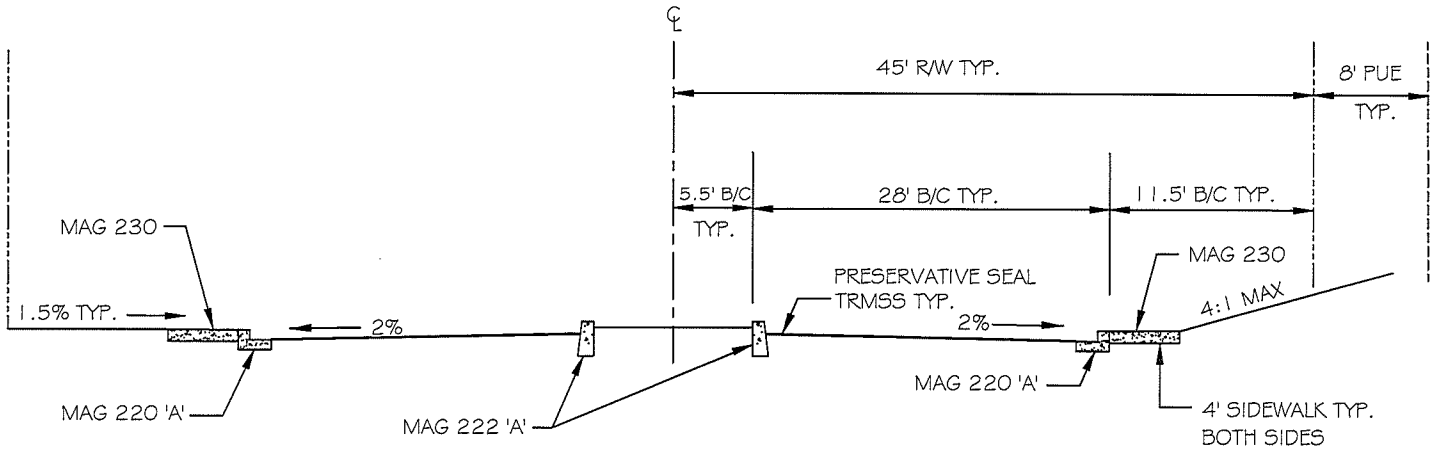

NOTES:

1. THE SUBGRADE SHALL BE PREPARED IN ACCORDANCE WITH MAG STANDARD SPECIFICATIONS, SEC. 301.
2. BASE COURSE:
   A. THE THICKNESS SHALL CONFORM TO COC STANDARD DETAIL C-240.
   B. ALL CONSTRUCTION AND MATERIALS SHALL CONFORM TO MAG STANDARD SPECIFICATIONS, SECS. 310 AND 702.
3. ASPHALTIC CONCRETE PAVEMENT:
   A. THE PAVEMENT SHALL BE 3" THICK A-12.5 EVAC ASPHALTIC CONCRETE.
   B. AREAS OF VISIBLE MIXTURE SEGREGATION SHALL BE MILLED TO A DEPTH OF 2" AND OVERLAID A MINIMUM OF THE LANE WIDTH.
   C. ALL CONSTRUCTION AND MATERIALS SHALL CONFORM TO EVAC AND MAG STANDARD SPECIFICATIONS, SECS. 321 AND 710.
   D. PRESERVATIVE SEAL COAT CONFORMING TO MAG SEC 334 AND SHALL BE TRMSS PER SEC 718. APPLICATION PER PAVING CONSTRUCTION NOTE.
4. WHEN IN THE BEST INTEREST OF THE CITY, THE PUBLIC WORKS DIRECTOR, OR DESIGNEE, MAY WAIVE SIDEWALK ON ONE SIDE OF ROADWAY IN INDUSTRIAL AREAS.
5. RAMP END OF MEDIAN PER COC STANDARD DETAIL C-225.
6. MEDIAN LANDSCAPE AREA SHALL BE PER COC STANDARD DETAIL C-807 (MOUNDING IN MEDIAN NOT PERMITTED).
7. 0.2% MINIMUM LONGITUDINAL GRADE ALLOWED.

DETAIL NO.					DETAIL NO.
C-206	CITY OF CHANDLER STANDARD DETAIL	**COLLECTOR STREET WITH MEDIAN TYPICAL CROSS SECTION**	APPROVED: CITY ENGINEER		**C-206**
NTS			DATE: 07-09-2015		NTS

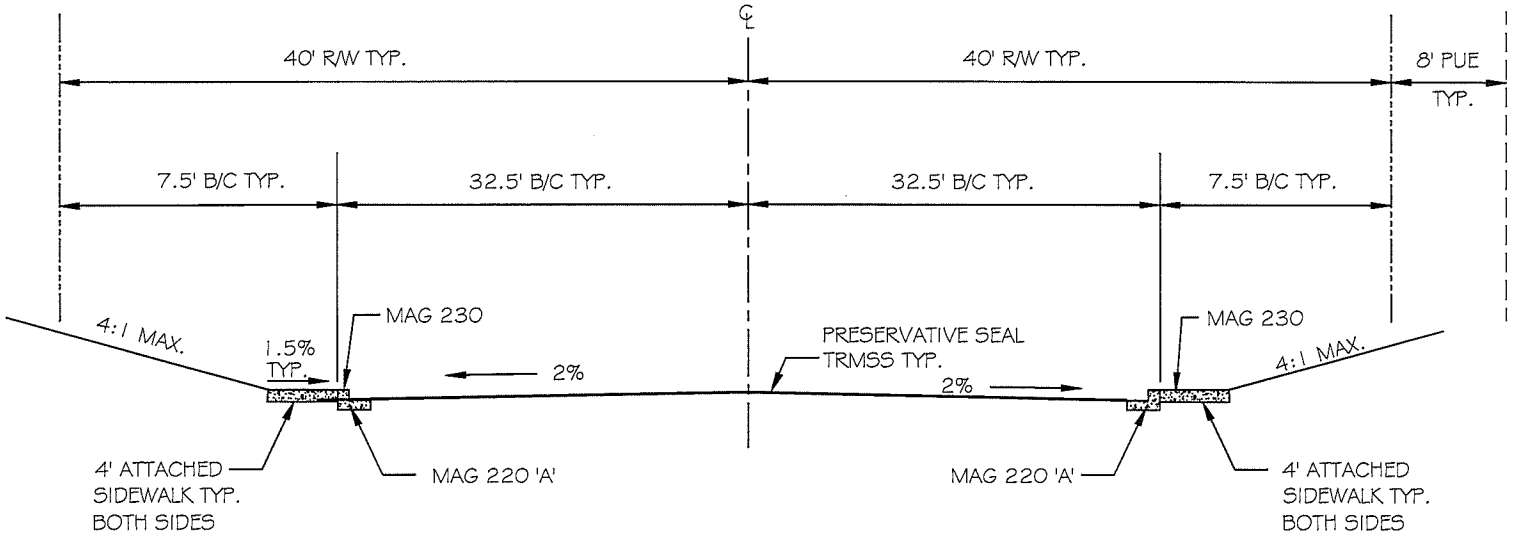

NOTES:

1. THE SUBGRADE SHALL BE PREPARED IN ACCORDANCE WITH MAG STANDARD SPECIFICATIONS, SEC. 301.
2. BASE COURSE:
   A. THE THICKNESS SHALL CONFORM TO COC STANDARD DETAIL C-240.
   B. ALL CONSTRUCTION AND MATERIALS SHALL CONFORM TO MAG STANDARD SPECIFICATIONS, SECS. 310 AND 702.
3. ASPHALTIC CONCRETE PAVEMENT:
   A. THE PAVEMENT SHALL BE 3" THICK A-12.5 EVAC ASPHALTIC CONCRETE.
   B. AREAS OF VISIBLE MIXTURE SEGREGATION SHALL BE MILLED TO A DEPTH OF 2" AND OVERLAID A MINIMUM OF THE LANE WIDTH.
   C. ALL CONSTRUCTION AND MATERIALS SHALL CONFORM TO EVAC AND MAG STANDARD SPECIFICATIONS, SECS. 321 AND 710.
   D. PRESERVATIVE SEAL COAT CONFORMING TO MAG SEC 334 AND SHALL BE TRMSS PER SEC 718. APPLICATION PER PAVING CONSTRUCTION NOTE.
4. WHEN IN THE BEST INTEREST OF THE CITY, THE PUBLIC WORKS DIRECTOR, OR DESIGNEE, MAY WAIVE SIDEWALK ON ONE OR BOTH SIDES OF ROADWAY.
5. 0.2% MINIMUM LONGITUDINAL GRADE ALLOWED.

DETAIL NO.					DETAIL NO.
C-208	CITY OF CHANDLER STANDARD DETAIL	**INDUSTRIAL COLLECTOR STREET TYPICAL CROSS SECTION**	APPROVED: CITY ENGINEER		**C-208**
NTS			DATE: 07-09-2015		NTS

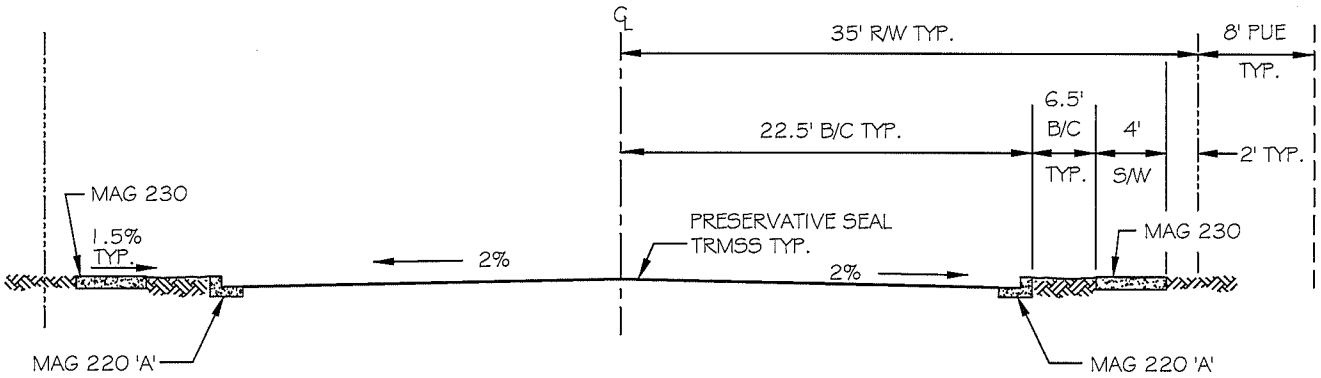

BOULEVARD OPTION

NOTES:

1. THE SUBGRADE SHALL BE PREPARED IN ACCORDANCE WITH MAG STANDARD SPECIFICATIONS, SEC. 301.
2. BASE COURSE:
   A. THE THICKNESS SHALL CONFORM TO COC STANDARD DETAIL C-241 FOR RESIDENTIAL AREAS AND COC STANDARD DETAIL C-240 FOR ALL OTHER AREAS.
   B. ALL CONSTRUCTION AND MATERIALS SHALL CONFORM TO MAG STANDARD SPECIFICATIONS, SECS. 310 AND 702.
3. ASPHALTIC CONCRETE PAVEMENT:
   A. THE PAVEMENT SHALL BE 3" THICK A-12.5 EVAC ASPHALTIC CONCRETE.
   B. AREAS OF VISIBLE MIXTURE SEGREGATION SHALL BE MILLED TO A DEPTH OF 2" AND OVERLAID A MINIMUM OF THE LANE WIDTH.
   C. ALL CONSTRUCTION AND MATERIALS SHALL CONFORM TO EVAC AND MAG STANDARD SPECIFICATIONS, SECS. 321 AND 710.
   D. PRESERVATIVE SEAL COAT CONFORMING TO MAG SEC 334 AND SHALL BE TRMSS PER SEC 718. APPLICATION PER PAVING CONSTRUCTION NOTE.
4. WHEN IN THE BEST INTEREST OF THE CITY, THE PUBLIC WORKS DIRECTOR, OR DESIGNEE, MAY WAIVE SIDEWALK ON ONE SIDE OF ROADWAY OR ON BOTH SIDES IN INDUSTRIAL AREAS.
5. 0.2% MINIMUM LONGITUDINAL GRADE ALLOWED.
6. DUCTILE IRON WATER LINE UNDER STREET; METERS BACK OF WALK.

DETAIL NO.					DETAIL NO.
C-209	CITY OF CHANDLER STANDARD DETAIL	**COLLECTOR BOULEVARD TYPICAL CROSS SECTION**	APPROVED: CITY ENGINEER		**C-209**
NTS			DATE: 07-09-2015		NTS

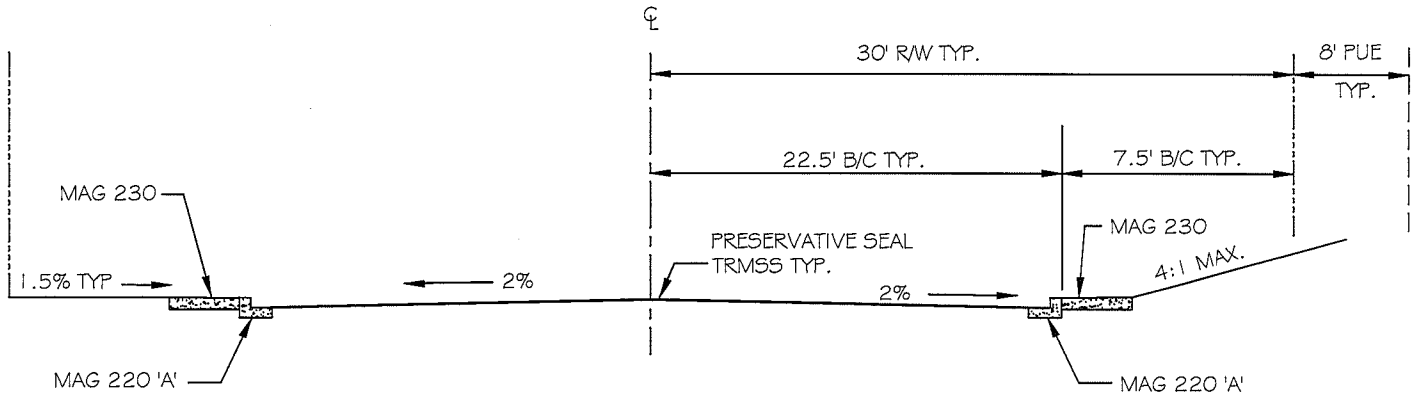

NOTES:

1. THE SUBGRADE SHALL BE PREPARED IN ACCORDANCE WITH MAG STANDARD SPECIFICATIONS, SEC. 301.
2. BASE COURSE:
   A. THE THICKNESS SHALL CONFORM TO COC STANDARD DETAIL C-241 FOR RESIDENTIAL AREAS AND COC STANDARD DETAIL C-240 FOR ALL OTHER AREAS.
   B. ALL CONSTRUCTION AND MATERIALS SHALL CONFORM TO MAG STANDARD SPECIFICATIONS, SECS. 310 AND 702.
3. ASPHALTIC CONCRETE PAVEMENT:
   A. THE PAVEMENT SHALL BE 3" THICK A-12.5 EVAC ASPHALTIC CONCRETE.
   B. AREAS OF VISIBLE MIXTURE SEGREGATION SHALL BE MILLED TO A DEPTH OF 2" AND OVERLAID A MINIMUM OF THE LANE WIDTH.
   C. ALL CONSTRUCTION AND MATERIALS SHALL CONFORM TO EVAC AND MAG STANDARD SPECIFICATIONS, SECS. 321 AND 710.
   D. PRESERVATIVE SEAL COAT CONFORMING TO MAG SEC 334 AND SHALL BE TRMSS PER SEC 718. APPLICATION PER PAVING CONSTRUCTION NOTE.
4. WHEN IN THE BEST INTEREST OF THE CITY, THE PUBLIC WORKS DIRECTOR, OR DESIGNEE, MAY WAIVE SIDEWALK ON ONE SIDE OF ROADWAY OR ON BOTH SIDES IN INDUSTRIAL AREAS.
5. 0.2% MINIMUM LONGITUDINAL GRADE ALLOWED.

DETAIL NO.					DETAIL NO.
C-210	CITY OF CHANDLER STANDARD DETAIL	**COLLECTOR STREET TYPICAL CROSS SECTION**	APPROVED: CITY ENGINEER		**C-210**
NTS			DATE: 07-09-2015		NTS

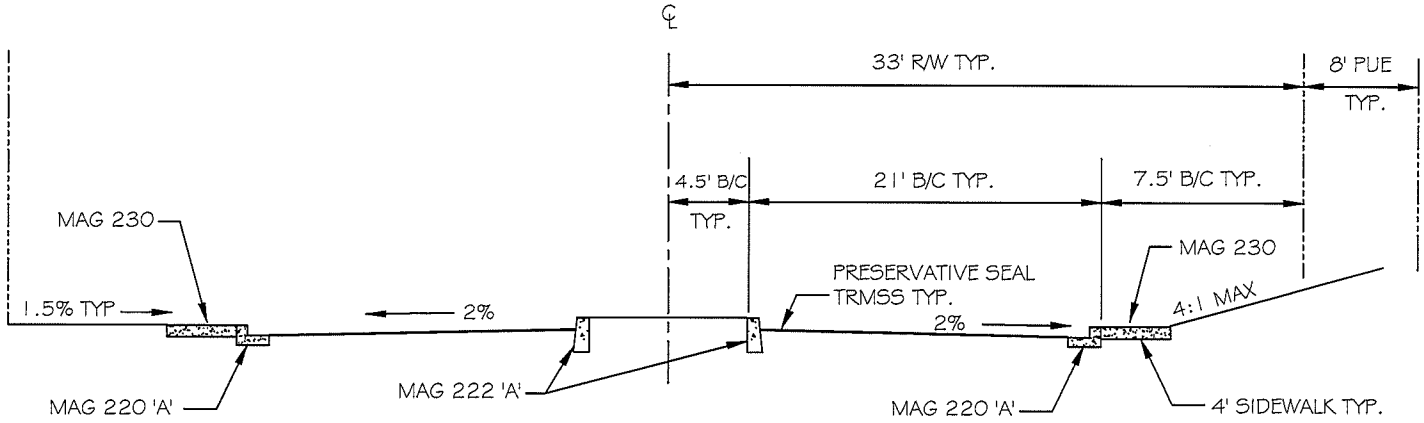

NOTES:

1. THE SUBGRADE SHALL BE PREPARED IN ACCORDANCE WITH MAG STANDARD SPECIFICATIONS, SEC. 301.
2. BASE COURSE:
   A. THE THICKNESS SHALL CONFORM TO COC STANDARD DETAIL C-242.
   B. ALL CONSTRUCTION AND MATERIALS SHALL CONFORM TO MAG STANDARD SPECIFICATIONS, SECS. 310 AND 702.
3. ASPHALTIC CONCRETE PAVEMENT:
   A. THE PAVEMENT SHALL BE 3" THICK R-12.5 EVAC ASPHALTIC CONCRETE.
   B. ALL CONSTRUCTION AND MATERIALS SHALL CONFORM TO MAG STANDARD SPECIFICATIONS, SECS. 321 AND 710.
   C. PRESERVATIVE SEAL COAT CONFORMING TO MAG SEC 334 AND SHALL BE TRMSS PER SEC 718. APPLICATION PER PAVING CONSTRUCTION NOTE.
4. NO PARKING IS PERMITTED.
5. RAMP END OF MEDIAN PER COC STANDARD DETAIL C-225.
6. MEDIAN LANDSCAPE AREA SHALL BE PER COC STANDARD DETAIL C-807 (MOUNDING IN MEDIAN NOT PERMITTED).
7. 0.2% MINIMUM LONGITUDINAL GRADE ALLOWED.

DETAIL NO.					DETAIL NO.
C-211	CITY OF CHANDLER STANDARD DETAIL	**LOCAL STREET WITH MEDIAN TYPICAL CROSS SECTION**	APPROVED: CITY ENGINEER		**C-211**
NTS			DATE: 07-09-2015		NTS

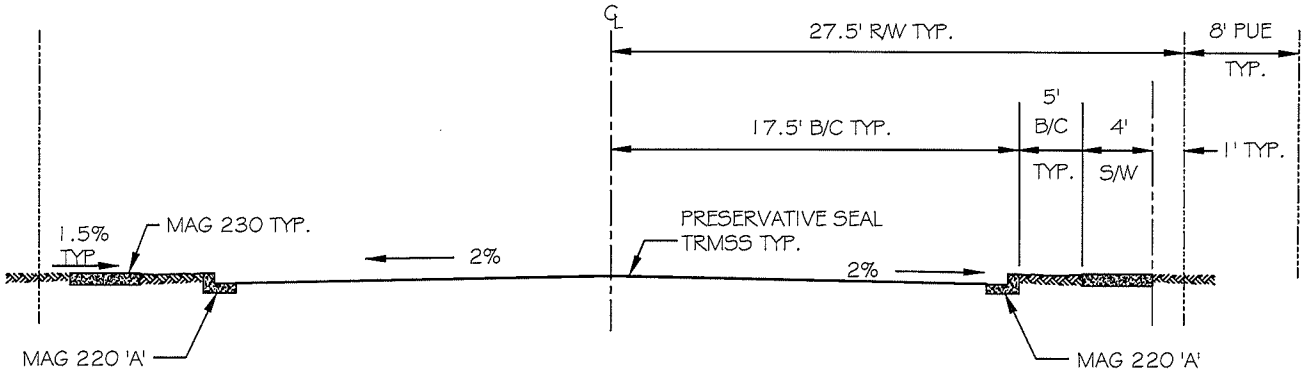

NOTES:

1. THE SUBGRADE SHALL BE PREPARED IN ACCORDANCE WITH MAG STANDARD SPECIFICATIONS, SEC. 301.
2. BASE COURSE:
   A. THE THICKNESS SHALL CONFORM TO COC STANDARD DETAIL C-241 FOR RESIDENTIAL AREAS AND COC STANDARD DETAIL C-240 FOR ALL OTHER AREAS.
   B. ALL CONSTRUCTION AND MATERIALS SHALL CONFORM TO MAG STANDARD SPECIFICATIONS, SECS. 310 AND 702.
3. ASPHALTIC CONCRETE PAVEMENT:
   A. THE PAVEMENT SHALL BE 3" THICK R-12.5 EVAC ASPHALTIC CONCRETE.
   B. ALL CONSTRUCTION AND MATERIALS SHALL CONFORM TO MAG STANDARD SPECIFICATIONS, SECS. 321 AND 710.
   C. PRESERVATIVE SEAL COAT CONFORMING TO MAG SEC 334 AND SHALL BE TRMSS PER SEC 718. APPLICATION PER PAVING CONSTRUCTION NOTE.
4. WHEN IN THE BEST INTEREST OF THE CITY, THE PUBLIC WORKS DIRECTOR, OR DESIGNEE, MAY WAIVE SIDEWALK ON ONE OR BOTH SIDES OF ROADWAY IN INDUSTRIAL AREAS.
5. 0.2% MINIMUM LONGITUDINAL GRADE ALLOWED.
6. ALLOWED FOR MULTI-FAMILY DEVELOPMENTS, OR SINGLE FAMILY RESIDENTIAL DEVELOPMENTS WITH FRONTAGES LESS THAN 65'.
7. DUCTILE IRON WATER LINE UNDER STREET; METERS BACK OF WALK.

DETAIL NO.					DETAIL NO.
C-212	CITY OF CHANDLER STANDARD DETAIL	**LOCAL BOULEVARD WITH FRONTAGES LESS THAN 65' TYPICAL CROSS SECTION**	APPROVED: CITY ENGINEER		**C-212**
NTS			DATE: 07-09-2015		NTS

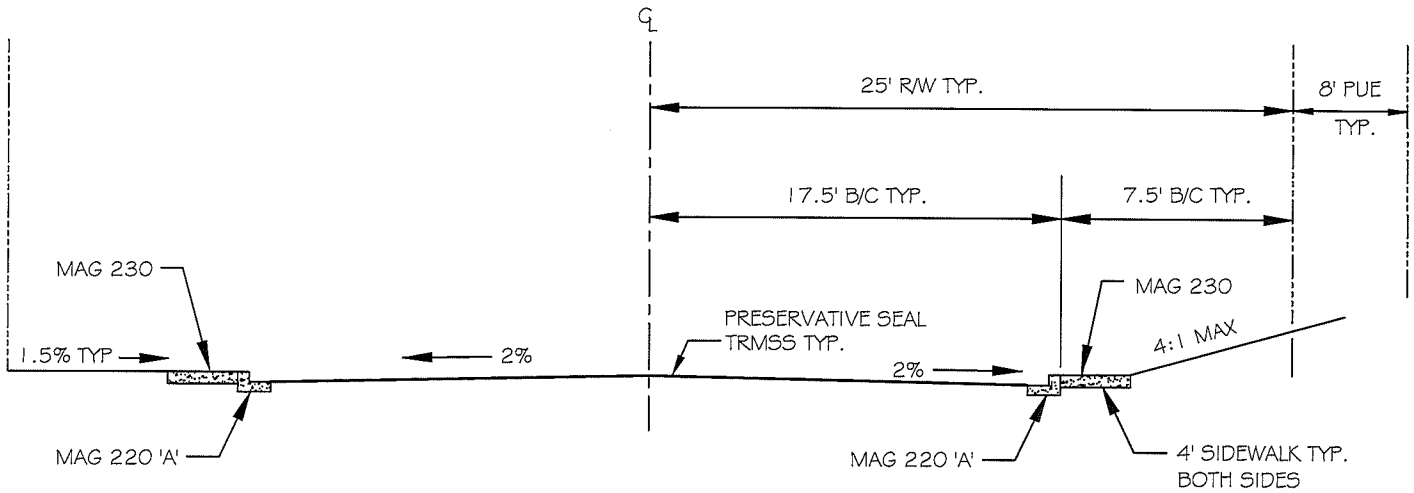

NOTES:

1. THE SUBGRADE SHALL BE PREPARED IN ACCORDANCE WITH MAG STANDARD SPECIFICATIONS, SEC. 301.
2. BASE COURSE:
   A. THE THICKNESS SHALL CONFORM TO COC STANDARD DETAIL C-242.
   B. ALL CONSTRUCTION AND MATERIALS SHALL CONFORM TO MAG STANDARD SPECIFICATIONS, SECS. 310 AND 702.
3. ASPHALTIC CONCRETE PAVEMENT:
   A. THE PAVEMENT SHALL BE 3" THICK R-12.5 EVAC ASPHALTIC CONCRETE.
   B. ALL CONSTRUCTION AND MATERIALS SHALL CONFORM TO MAG STANDARD SPECIFICATIONS, SECS. 321 AND 710.
   C. PRESERVATIVE SEAL COAT CONFORMING TO MAG SEC 334 AND SHALL BE TRMSS PER SEC 718. APPLICATION PER PAVING CONSTRUCTION NOTE.
4. 0.2% MINIMUM LONGITUDINAL GRADE ALLOWED.
5. IF ALL ABUTTING LOT FRONTAGES EXCEED 65', STREET WIDTH MAY BE REDUCED TO 32' (B.C.) AND ROW WIDTH MAY BE REDUCED TO 42'.
6. IF ALL ABUTTING LOT FRONTAGES EXCEED 90', STREET WIDTH MAY BE REDUCED TO 29' (B.C.) AND ROW WIDTH MAY BE REDUCED TO 42'.

DETAIL NO.					DETAIL NO.
C-213	CITY OF CHANDLER STANDARD DETAIL	**LOCAL STREET TYPICAL CROSS SECTION**	APPROVED: CITY ENGINEER		**C-213**
NTS			DATE: 07-09-2015		NTS

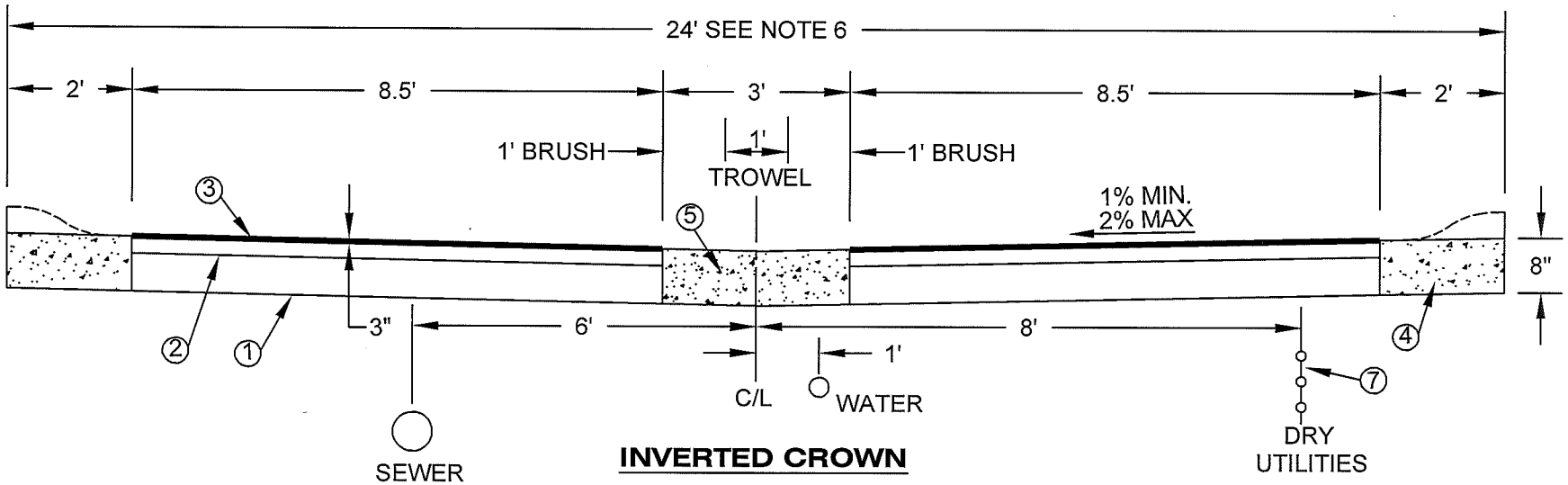

INVERTED CROWN

1. THE SUBGRADE SHALL BE PREPARED IN ACCORDANCE WITH MAG STANDARD SPECIFICATIONS, SEC. 301.

2. BASE COURSE:
   A. THE THICKNESS SHALL CONFORM TO COC STD. DTL. C-242.
   B. ALL CONSTRUCTION AND MATERIALS SHALL CONFORM TO MAG STD. SPECIFICATIONS, SEC. 310 AND 702.

3. ASPHALTIC CONCRETE PAVEMENT:
   A. THE PAVEMENT SHALL BE MINIMUM 3" THICK R-12.5 EVAC ASPHALTIC CONCRETE.
   B. ALL CONSTRUCTION AND MATERIALS SHALL CONFORM TO MAG STD. SPECIFICATIONS, SEC. 321 AND 710.
   C. PRESERVATIVE SEAL COAT CONFORMING TO MAG SEC. 334 AND SHALL BE TRMSS PER SEC. 718. APPLICATION PER PAVING CONSTRUCTION NOTE.

4. CONCRETE RIBBON CURB PER MAG DTL. 220-1 (TYPE B) OR ROLL CURB PER MAG DTL. 200-1 (TYPE C). CONCRETE SHALL BE CLASS "B" PER MAG SEC. 725 AND INSTALLED PER MAG SEC. 505.

5. VALLEY GUTTER SHALL BE CLASS "B" PER MAG SEC. 725 AND INSTALLED PER MAG SEC. 505. BRUSH / TROWEL SURFACES AS SHOWN.

6. EASEMENTS REQUIRED OVER PRIVATE DRIVE:
   A. WATER AND SEWER EASEMENT.
   B. PUBLIC UTILITY EASEMENT.
   C. CROSS ACCESS EASEMENT.
   D. DRAINAGE EASEMENT.

7. ALL DRY UTILITIES WILL BE TRENCHED WITHIN THE 24' PUE.

DETAIL NO.					DETAIL NO.
C-214	CITY OF CHANDLER STANDARD DETAIL	**PRIVATE SHARED DRIVEWAY TYPICAL CROSS SECTION & UTILITIES**	APPROVED: CITY ENGINEER		**C-214**
NTS			DATE: 1-9-14		NTS

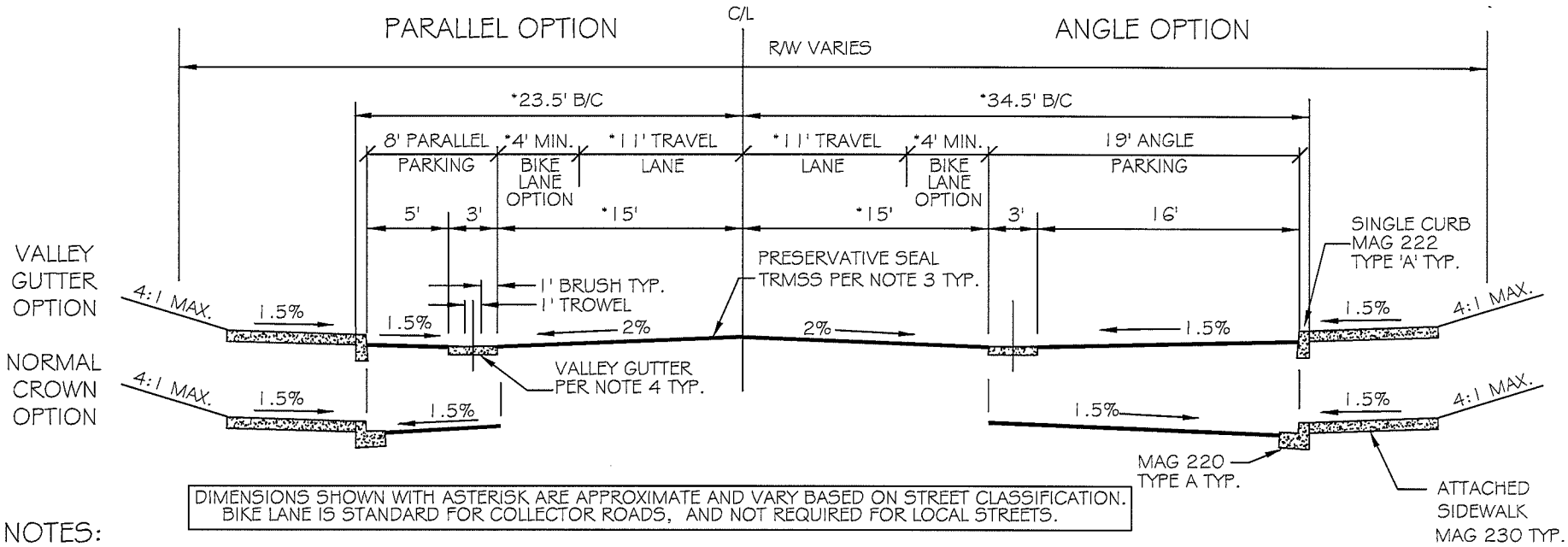

DIMENSIONS SHOWN WITH ASTERISK ARE APPROXIMATE AND VARY BASED ON STREET CLASSIFICATION. BIKE LANE IS STANDARD FOR COLLECTOR ROADS, AND NOT REQUIRED FOR LOCAL STREETS.

NOTES:

1. THE SUBGRADE SHALL BE PREPARED IN ACCORDANCE WITH MAG STANDARD SPECIFICATIONS, SEC. 301.
2. BASE COURSE:
   A. THE THICKNESS SHALL CONFORM TO COC STANDARD DETAIL C-240.
   B. ALL CONSTRUCTION AND MATERIALS SHALL CONFORM TO MAG STANDARD SPECIFICATIONS, SECS. 310 AND 702.
3. ASPHALTIC CONCRETE PAVEMENT:
   A. THE PAVEMENT SHALL BE 3" THICK A-12.5 EVAC ASPHALTIC CONCRETE.
   B. AREAS OF VISIBLE MIXTURE SEGREGATION SHALL BE MILLED TO A DEPTH OF 2" AND OVERLAID A MINIMUM OF THE LANE WIDTH.
   C. ALL CONSTRUCTION AND MATERIALS SHALL CONFORM TO EVAC AND MAG STANDARD SPECIFICATIONS, SECS. 321 AND 710.
   D. PRESERVATIVE SEAL COAT CONFORMING TO MAG SEC 334 AND SHALL BE TRMSS PER SEC 718. APPLICATION PER PAVING CONSTRUCTION NOTE.
4. VALLEY GUTTER SHALL BE 9" THICK CLASS "B" PER MAG SEC 725 AND INSTALLED PER MAG SEC 505. BRUSH / TROWEL SURFACES AS SHOWN. CROSS SLOPE GRADES NOT TO EXCEED 2%.
5. MINIMUM LONGITUDINAL GRADE IS 0.2%.
6. ON-STREET PARKING SHALL COMPLY WITH CITY STREET DESIGN AND ACCESS CONTROL TDM #4, SECTION 5. SEE ALSO COC STD DTL C-260.

DETAIL NO.					DETAIL NO.
C-215	CITY OF CHANDLER STANDARD DETAIL	**ON-STREET PARKING TYPICAL CROSS SECTION**	APPROVED: CITY ENGINEER		**C-215**
NTS			DATE: 07-09-2015		NTS

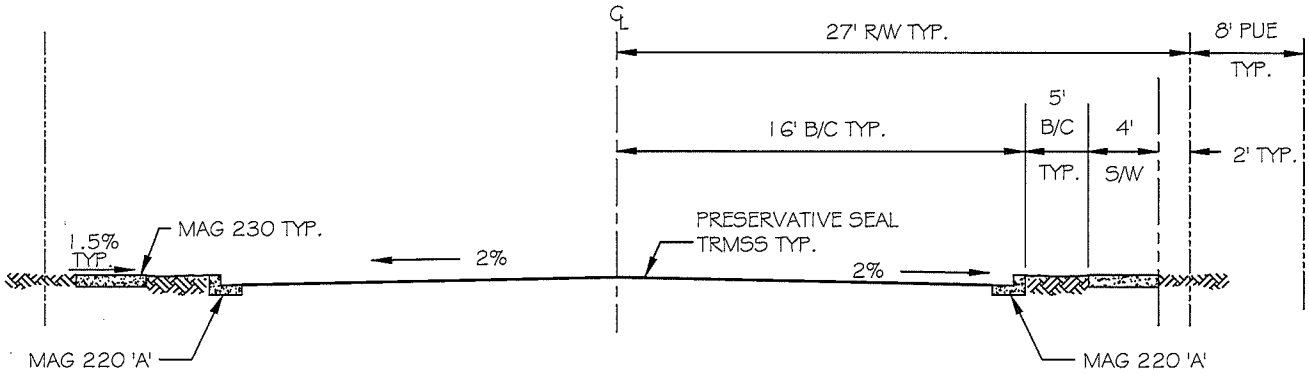

NOTES:

1. THE SUBGRADE SHALL BE PREPARED IN ACCORDANCE WITH MAG STANDARD SPECIFICATIONS, SEC. 301.
2. BASE COURSE:
   A. THE THICKNESS SHALL CONFORM TO COC STANDARD DETAIL C-241 FOR RESIDENTIAL AREAS AND COC STANDARD DETAIL C-240 FOR ALL OTHER AREAS.
   B. ALL CONSTRUCTION AND MATERIALS SHALL CONFORM TO MAG STANDARD SPECIFICATIONS, SECS. 310 AND 702.
3. ASPHALTIC CONCRETE PAVEMENT:
   A. THE PAVEMENT SHALL BE 3" THICK R-12.5 EVAC ASPHALTIC CONCRETE.
   B. ALL CONSTRUCTION AND MATERIALS SHALL CONFORM TO MAG STANDARD SPECIFICATIONS, SECS. 321 AND 710.
   C. PRESERVATIVE SEAL COAT CONFORMING TO MAG SEC 334 AND SHALL BE TRMSS PER SEC 718. APPLICATION PER PAVING CONSTRUCTION NOTE.
4. WHEN IN THE BEST INTEREST OF THE CITY, THE PUBLIC WORKS DIRECTOR, OR DESIGNEE, MAY WAIVE SIDEWALK ON ONE OR BOTH SIDES OF ROADWAY IN INDUSTRIAL AREAS.
5. 0.2% MINIMUM LONGITUDINAL GRADE ALLOWED.
6. ALLOWED ONLY FOR SINGLE FAMILY RESIDENTIAL DEVELOPMENTS WITH FRONTAGES OF 65' TO 90'.
7. DUCTILE IRON WATER LINE UNDER STREET; METERS BACK OF WALK.

DETAIL NO.					DETAIL NO.
C-221	CITY OF CHANDLER STANDARD DETAIL	**LOCAL BOULEVARD WITH FRONTAGES OF 65' TO 90' TYPICAL CROSS SECTION**	APPROVED: CITY ENGINEER		**C-221**
NTS			DATE: 07-09-2015		NTS

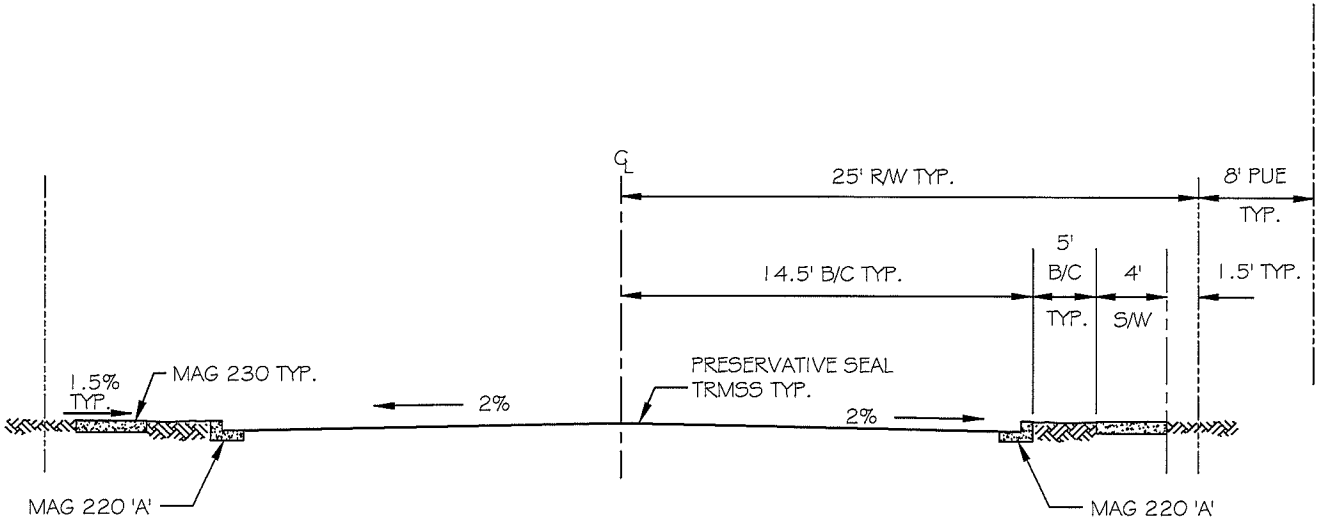

NOTES:

1. THE SUBGRADE SHALL BE PREPARED IN ACCORDANCE WITH MAG STANDARD SPECIFICATIONS, SEC. 301.
2. BASE COURSE:
   A. THE THICKNESS SHALL CONFORM TO COC STANDARD DETAIL C-241 FOR RESIDENTIAL AREAS AND COC STANDARD DETAIL C-240
   B. ALL CONSTRUCTION AND MATERIALS SHALL CONFORM TO MAG STANDARD SPECIFICATIONS, SECS. 310 AND 702. FOR ALL OTHER AREAS.
3. ASPHALTIC CONCRETE PAVEMENT:
   A. THE PAVEMENT SHALL BE 3" THICK R-12.5 EVAC ASPHALTIC CONCRETE.
   B. ALL CONSTRUCTION AND MATERIALS SHALL CONFORM TO MAG STANDARD SPECIFICATIONS, SECS. 321 AND 710.
   C. PRESERVATIVE SEAL COAT CONFORMING TO MAG SEC 334 AND SHALL BE TRMSS PER SEC 718. APPLICATION PER PAVING CONSTRUCTION NOTE.
4. WHEN IN THE BEST INTEREST OF THE CITY, THE PUBLIC WORKS DIRECTOR, OR DESIGNEE, MAY WAIVE SIDEWALK ON ONE OR BOTH SIDES OF ROADWAY IN INDUSTRIAL AREAS.
5. 0.2% MINIMUM LONGITUDINAL GRADE ALLOWED.
6. ALLOWED ONLY FOR SINGLE FAMILY RESIDENTIAL DEVELOPMENTS WITH FRONTAGES GREATER THAN 90'.
7. DUCTILE IRON WATER LINE UNDER STREET; METERS BACK OF WALK.

DETAIL NO.				
C-222	CITY OF CHANDLER STANDARD DETAIL	**LOCAL BOULEVARD WITH FRONTAGES GREATER THAN 90' TYPICAL CROSS SECTION**	APPROVED: CITY ENGINEER DATE: 07-09-2015	**C-222**
NTS				NTS

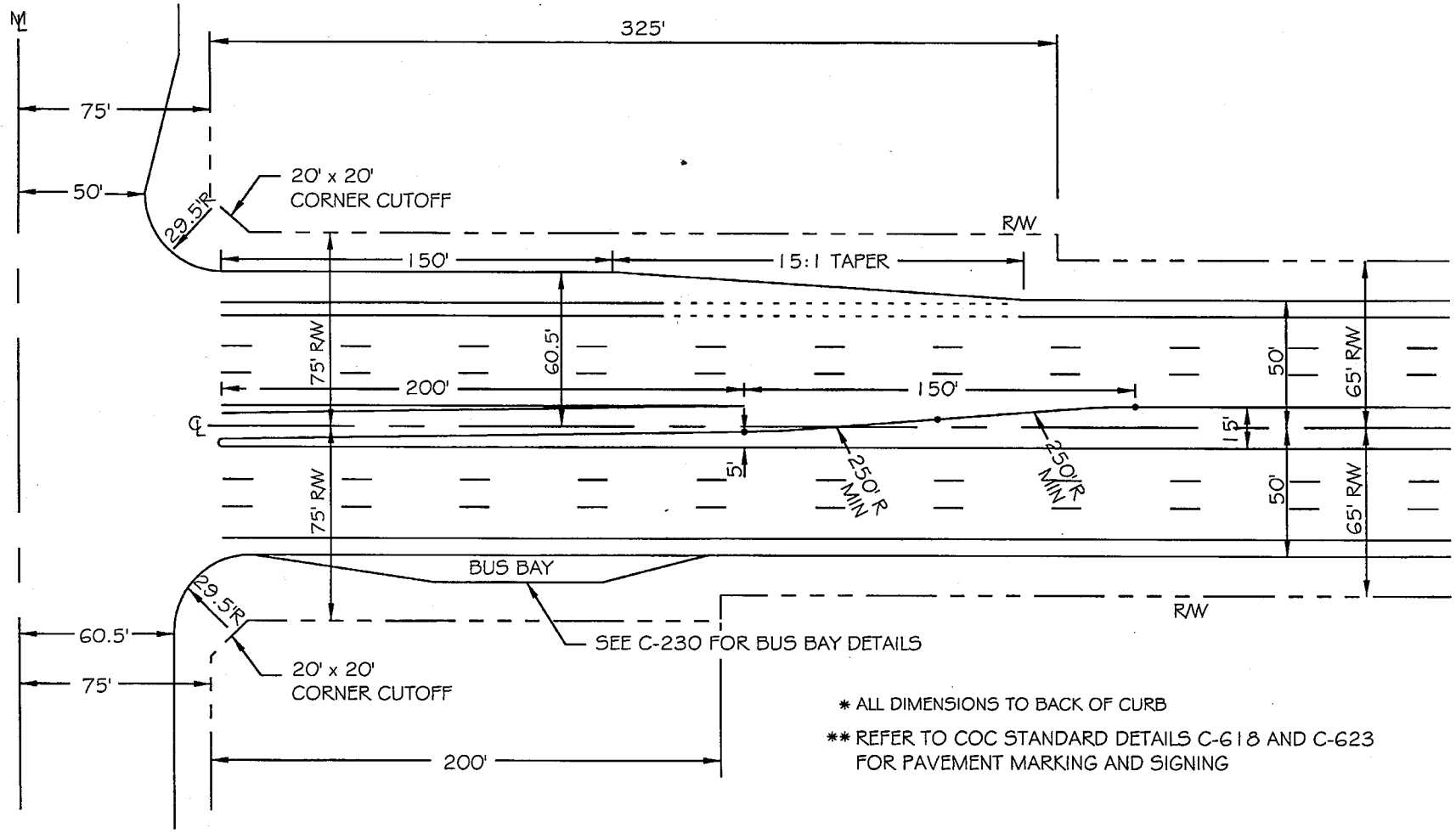

* ALL DIMENSIONS TO BACK OF CURB

** REFER TO COC STANDARD DETAILS C-618 AND C-623 FOR PAVEMENT MARKING AND SIGNING

DETAIL NO.					
C-223	CITY OF CHANDLER STANDARD DETAIL	**STANDARD MAJOR ARTERIAL/MAJOR ARTERIAL INTERSECTION RIGHT-OF-WAY, AND STREET DIMENSIONS**	APPROVED: Elizabeth Wood CITY ENGINEER	DATE: 2/26/07	DETAIL NO. **C-223**
NTS					PAGE 1 OF 2

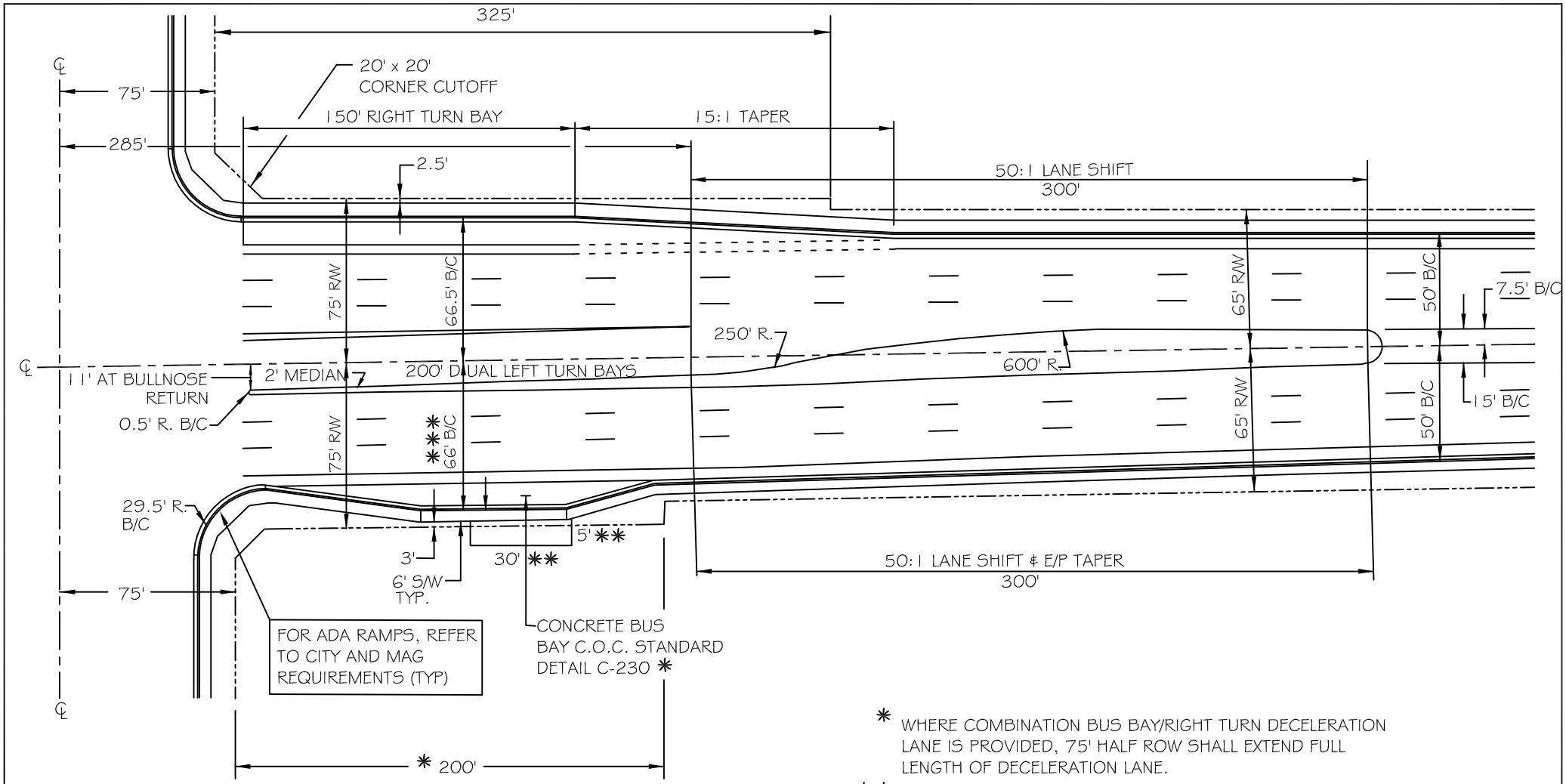

* WHERE COMBINATION BUS BAY/RIGHT TURN DECELERATION LANE IS PROVIDED, 75' HALF ROW SHALL EXTEND FULL LENGTH OF DECELERATION LANE.

** ADDITIONAL 5' X 30' EASEMENT SHALL BE REQUIRED OF DEVELOPER FOR BUS SHELTER PAD.

*** 66.5' B/C AND 2.5' FOR INTEGRAL BUS BAY/DECELERATION LANE, SEE C.O.C. STANDARD DETAIL C-231.

**** REFER TO COC STANDARD DETAIL C-619 AND C-623 FOR PAVEMENT MARKING AND SIGNING.

NOTES:

50 : 1 TAPERS FOR REDIRECTION OF THROUGH LANES

15 : 1 TAPERS FOR RIGHT TURN BAY APPROACHES

DETAIL NO.					DETAIL NO.
C-223	CITY OF CHANDLER STANDARD DETAIL	**ULTIMATE MAJOR ARTERIAL/MAJOR ARTERIAL INTERSECTION RIGHT-OF-WAY, STREET DIMENSIONS**	APPROVED: CITY ENGINEER		**C-223**
PAGE 2 OF 2			DATE: 3/14/2013		PAGE 2 OF 2

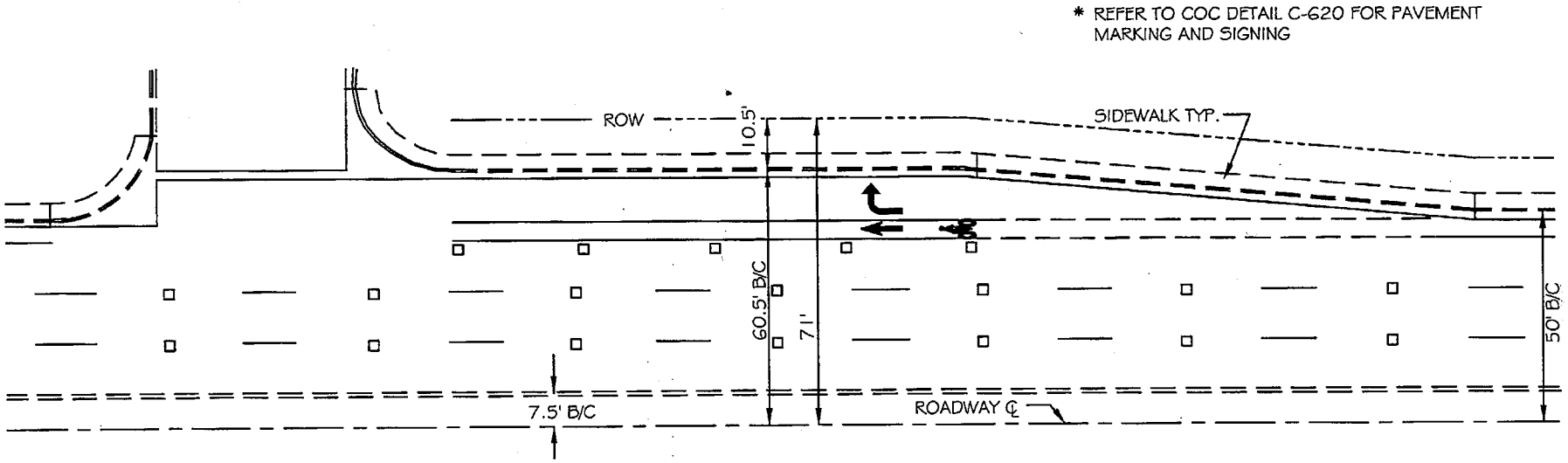

DETAIL NO.					DETAIL NO.
C-224	CITY OF CHANDLER STANDARD DETAIL	**MAJOR ARTERIAL DECELERATION LANE**	APPROVED: CITY ENGINEER		**C-224**
NTS			DATE: 01/08/09		NTS

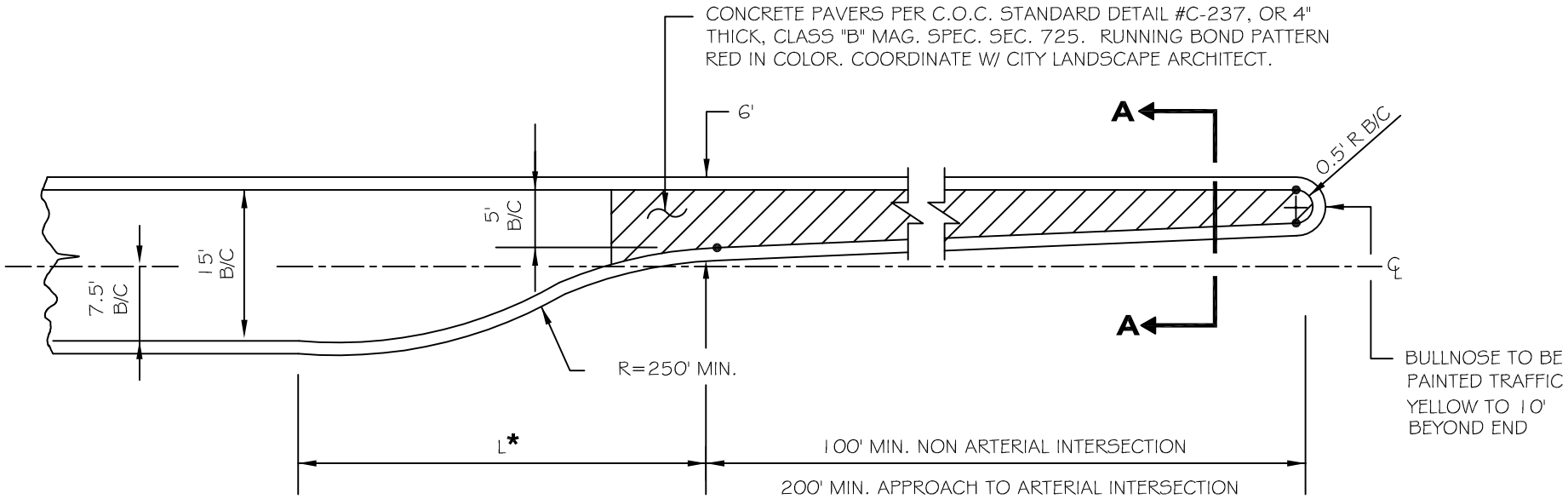

* TAPER LENGTH 'L' = $\frac{WS}{3}$, WHERE 'W' IS TURN LANE WIDTH IN FEET AND 'S' IS DESIGN SPEED IN MPH. MINIMUM 'L' = 100'

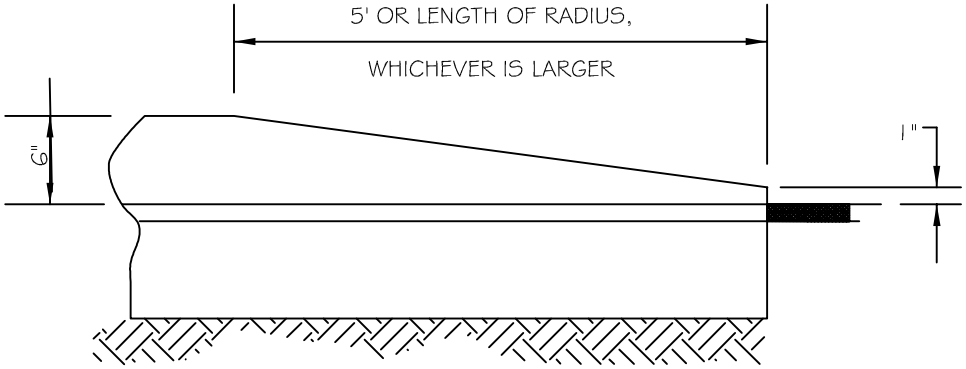

END OF MEDIAN RAMP

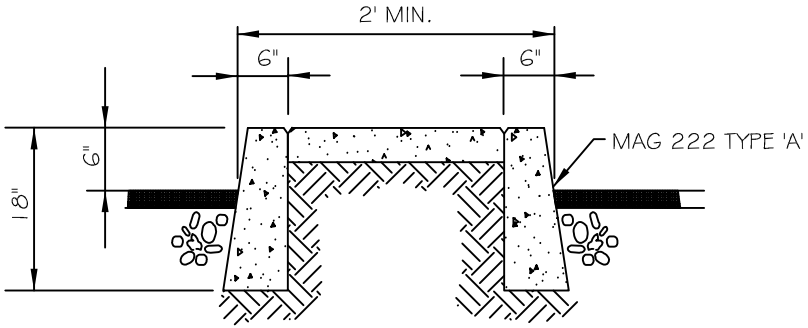

SECTION A - A

DETAIL NO.					DETAIL NO.
C-225	CITY OF CHANDLER STANDARD DETAIL	**GENERAL MEDIAN DESIGN**	APPROVED: CITY ENGINEER		**C-225**
NTS			DATE: 3/14/2013		NTS

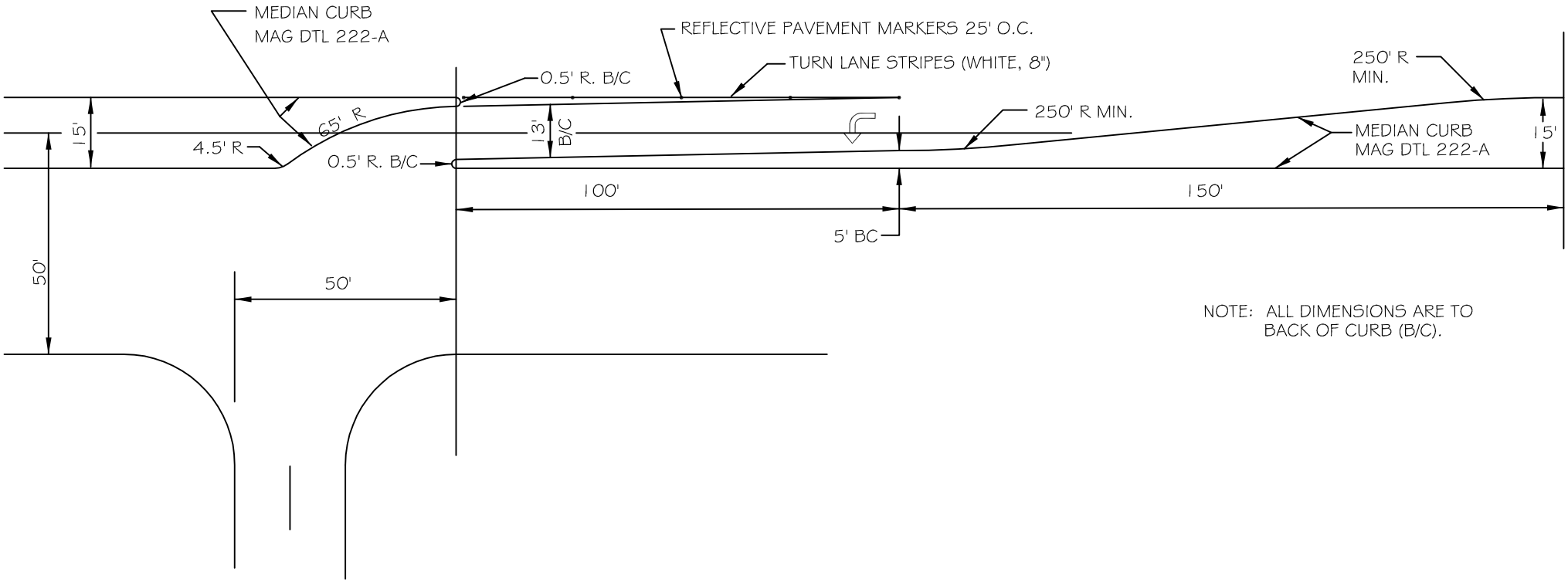

NOTE: ALL DIMENSIONS ARE TO BACK OF CURB (B/C).

DETAIL NO.					DETAIL NO.
C-226	CITY OF CHANDLER STANDARD DETAIL	**"LEFT IN ONLY" MEDIAN DESIGN 16' WIDE MEDIAN**	APPROVED: CITY ENGINEER		**C-226**
NTS			DATE: 3/14/2013		NTS

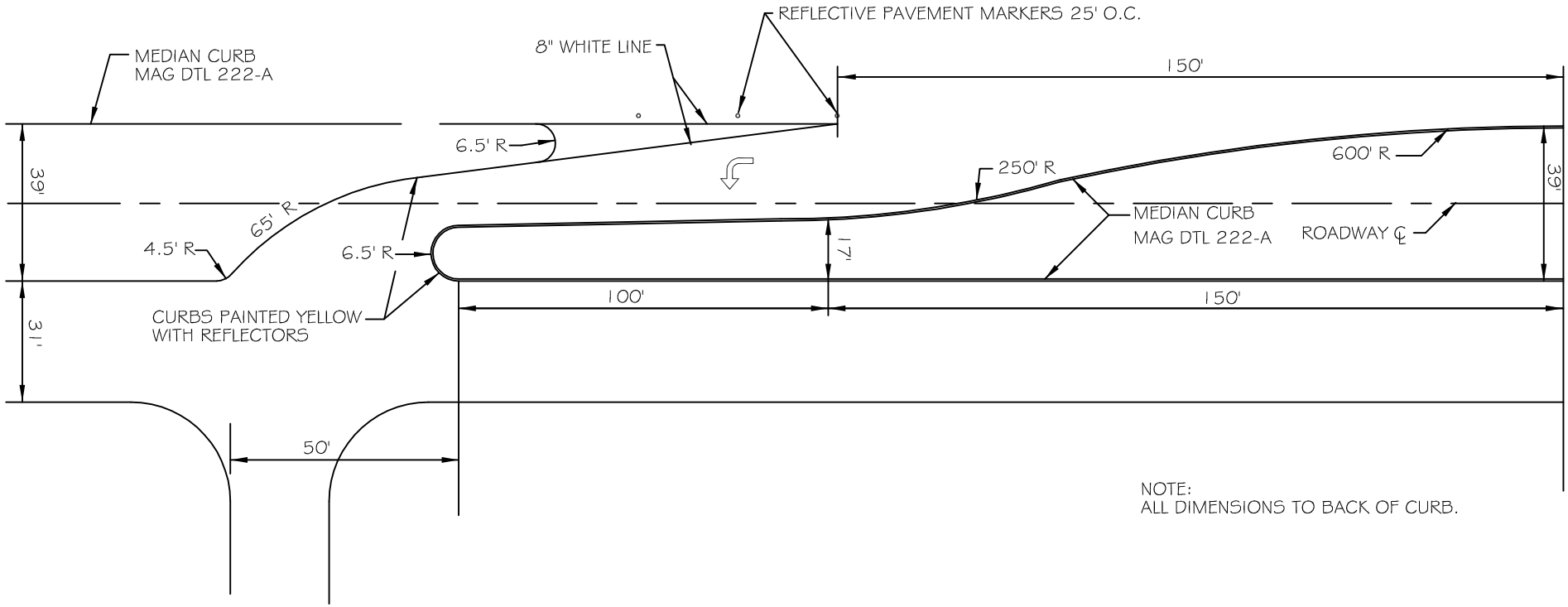

NOTE:
ALL DIMENSIONS TO BACK OF CURB.

DETAIL NO.					DETAIL NO.
C-227	CITY OF CHANDLER STANDARD DETAIL	**"LEFT IN ONLY" MEDIAN DESIGN 40' WIDE MEDIAN**	APPROVED: CITY ENGINEER		**C-227**
NTS			DATE: 3/14/2013		NTS

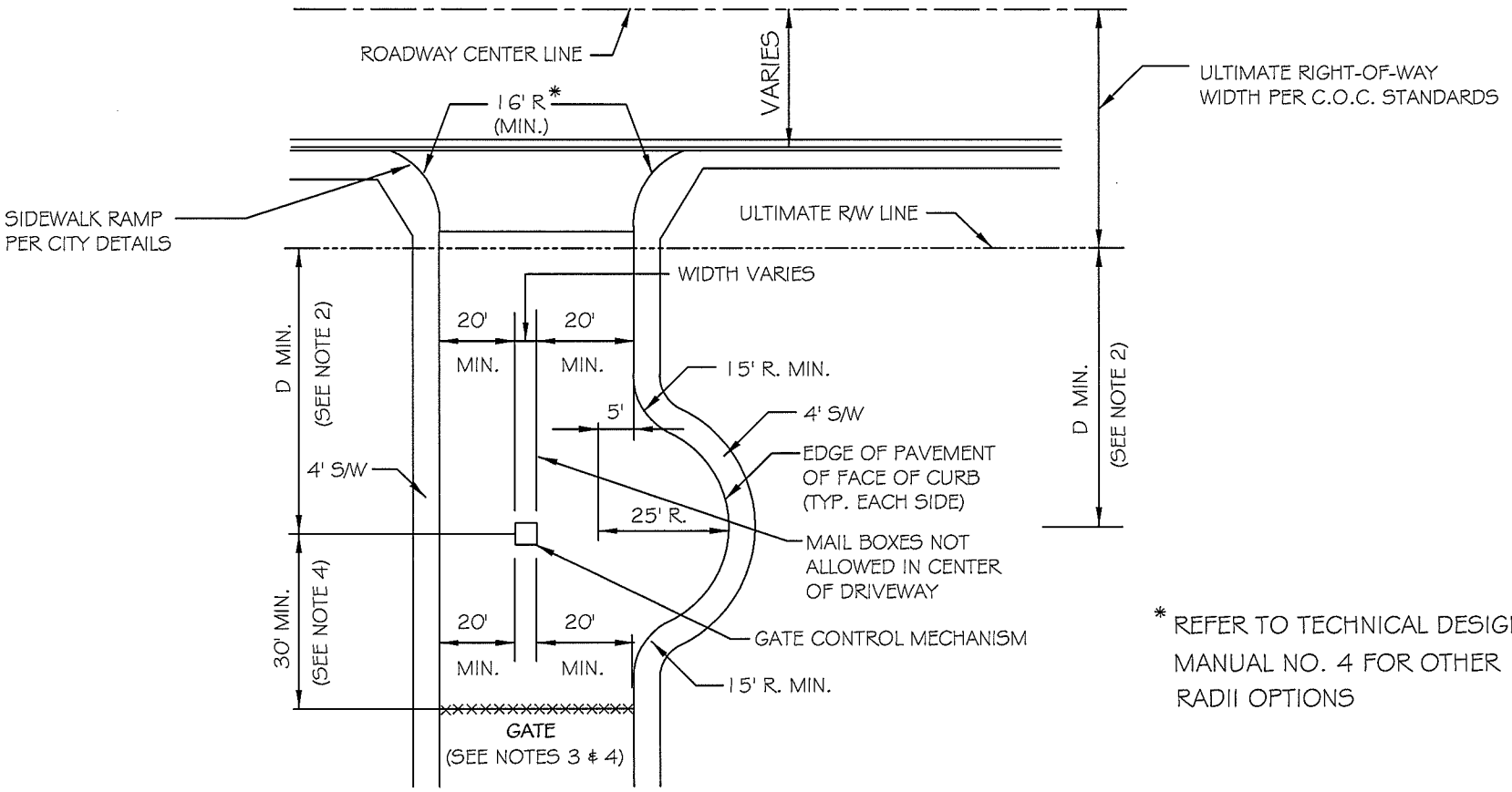

* REFER TO TECHNICAL DESIGN MANUAL NO. 4 FOR OTHER RADII OPTIONS

NOTES :

1. DRIVEWAY MAX. WIDTH = 45 FEET IN STREET R/W.
2. SETBACK REQUIREMENT BY NUMBER OF RESIDENTIAL UNITS:

NUMBER OF UNITS	D MIN.
LESS THAN 100	40'
101 TO 150	60'
151 TO 200	80'
GREATER THAN 200	100'

3. GATE INSTALLED AT BEGINNING OF 15' RADIUS.
4. 30' MIN. DIMENSION FROM CENTERLINE OF GATE CONTROL MECHANISM TO FACE OF GATE.
5. WHERE MORE THAN ONE ENTRY IS PROVIDED, $D_{MIN.}$ MAY BE REDUCED WITH APPROVAL OF CITY ENGINEER.
6. ELECTRICAL CONTROLLED GATES SHALL BE EQUIPPED WITH AN AUTOMATIC OPENING PRE-EMPTION DEVICE, TIMED TO REMAIN OPEN FOR 30 MINUTES, AND A KNOX KEY SWITCH OVERRIDE LOCATED AT THE GATE CONTROL MECHANISM.

DETAIL NO.					DETAIL NO.
C-228	CITY OF CHANDLER STANDARD DETAIL	**TYPICAL DRIVEWAY ACCESS TO PRIVATE GATED COMMUNITY**	APPROVED: CITY ENGINEER		**C-228**
NTS			DATE: 1-9-14		NTS

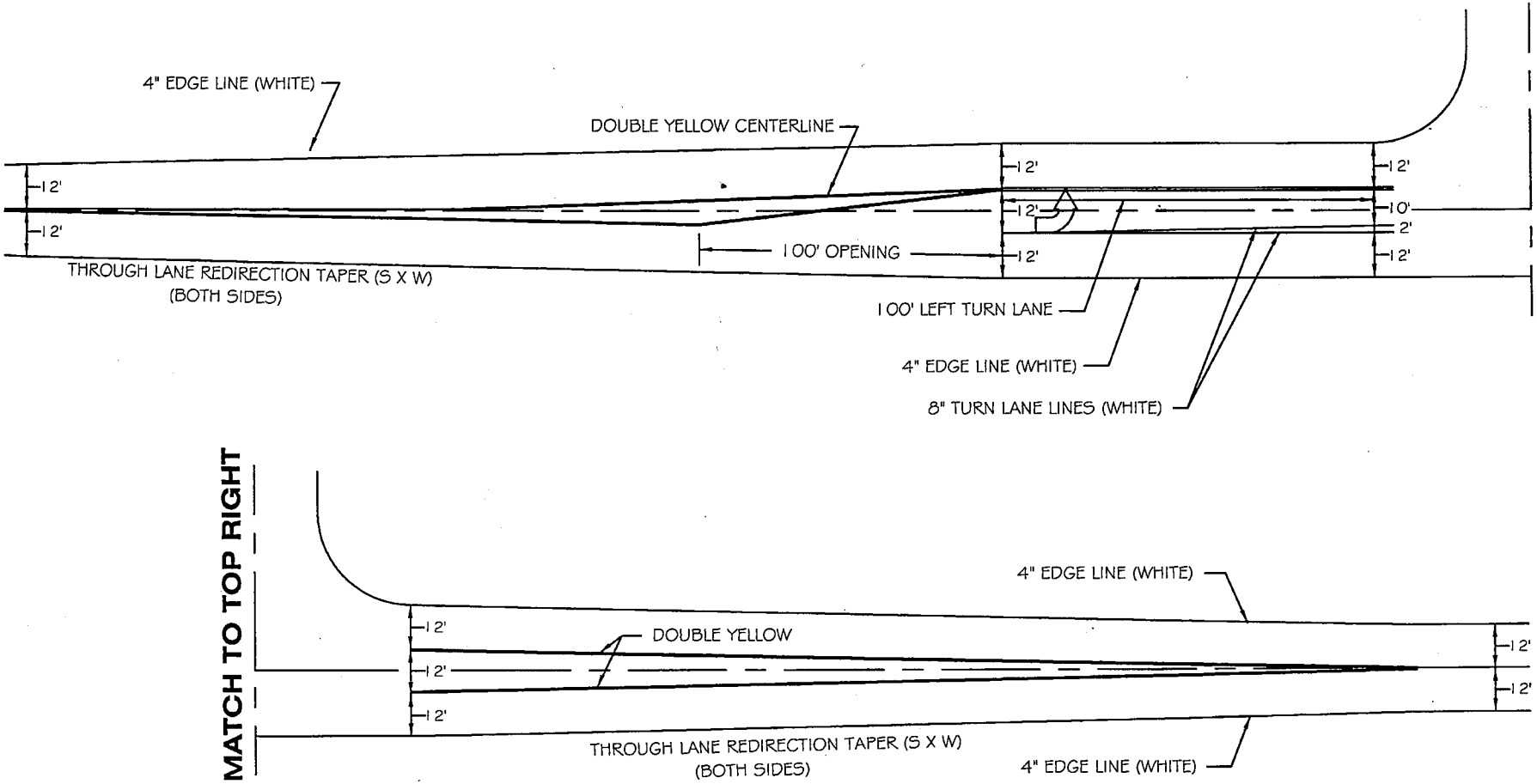

NOTE:

FOR SPEED LIMIT LESS THAN 40 M.P.H. USE 100' TURN LANE ENTRY

DETAIL NO.					
C-229 NTS	CITY OF CHANDLER STANDARD DETAIL	**LEFT TURN BAY ON TWO-LANE ROADWAY (TEMPORARY WIDENING, CROSS STREET ON ONE SIDE ONLY)**	APPROVED: CITY ENGINEER DATE: January 11, 2002	DETAIL NO. **C-229** NTS

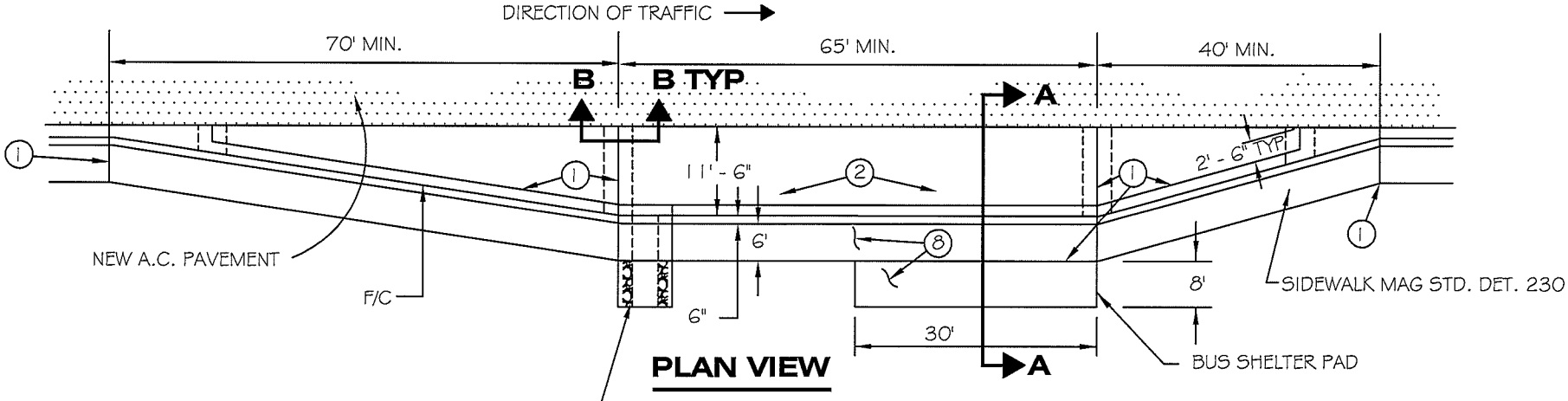

PLAN VIEW

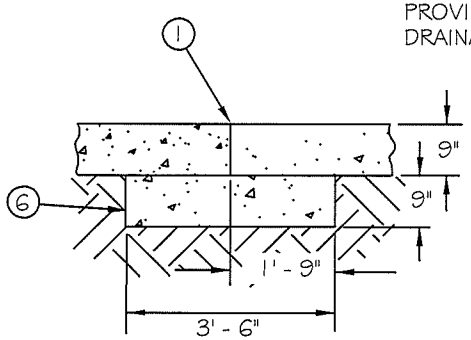

SECTION B-B

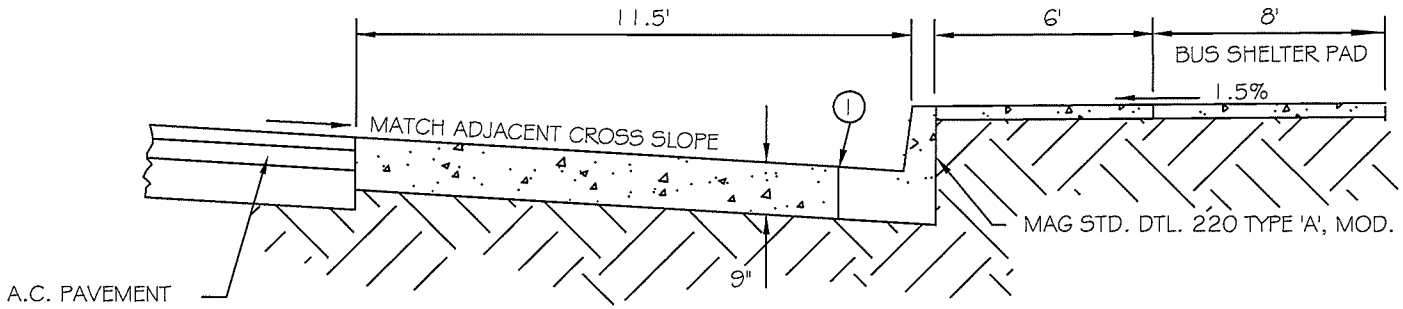

SECTION A-A

NOTES:

1. EXPANSION JOINT FILLER SHALL BE 1/2" BITUMINOUS PREFORMED EXPANSION JOINT FILLER ASTM D-1751. (FULL 8" DEPTH.)
2. CONCRETE BUS BAY SHALL BE BROOM FINISHED.
3. ALL CONCRETE SHALL CONFORM TO MAG STD. SPEC. SEC. 725. (CLASS 'A' FOR PAVEMENT.)
4. PLACE A COMBINATION CLEAR CURING COMPOUND AND WEATHER SEALER ON FINISHED SURFACE.
5. THE SUBGRADE SHALL BE PREPARED IN ACCORDANCE WITH MAG STD. SPEC. SEC. 301.
6. CONCRETE PAD SHALL BE POURED SEPARATELY FROM THE BUS BAY PAVEMENT.
7. CONTRACTION JOINTS IN THE BUS BAY SHALL MATCH THE SPACING OF THOSE IN THE CURB AND GUTTER.
8. MUST KEEP 8'x8' LANDING AREA (FROM BACK-OF-CURB) CLEAR OF OBSTRUCTIONS.

DETAIL NO.					DETAIL NO.
C-230	CITY OF CHANDLER STANDARD DETAIL	**CONCRETE BUS BAYS**	APPROVED: CITY ENGINEER		**C-230**
NTS			DATE: 1-9-14		NTS

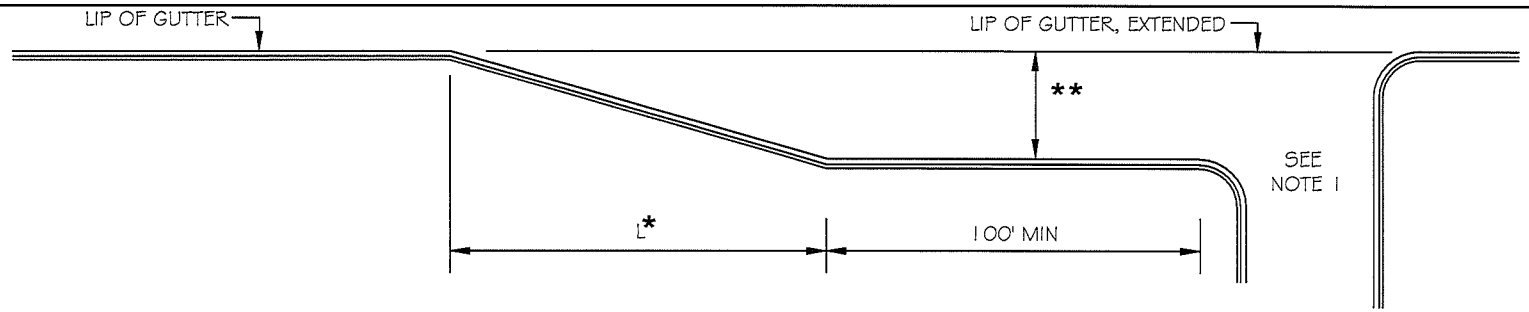

RIGHT TURN/DECELERATION LANE FOR DRIVEWAYS

* TAPER LENGTH $L = \frac{WS}{3}$, WHERE W IS TURN LANE WIDTH IN FEET AND S IS POSTED SPEED IN MPH. MINIMUM L = 100'

** 10.5' LIP TO LIP FOR ARTERIAL WITH BIKE LANE. SEE C-620 FOR STRIPING.

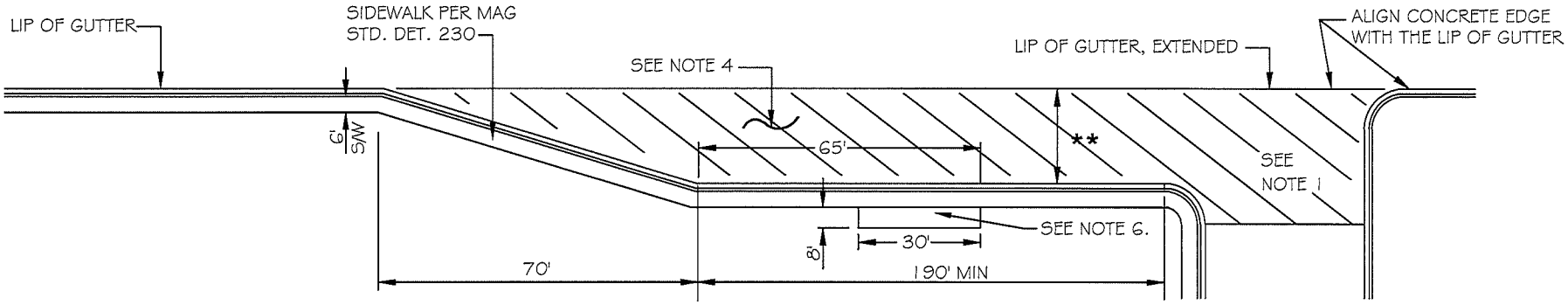

INTEGRAL BUS BAY/DECELERATION LANE

NOTES:

1. USE MAG STANDARD DETAIL 250 OR 251 FOR ENTRANCE, CURB AND SIDEWALK CONFIGURATION. RECOMMENDED DRIVEWAY DIMENSIONS ARE SPECIFIED IN TECHNICAL DESIGN MANUAL NO. 4, TABLE 7.
2. MAINTAIN NORMAL CROWN THROUGHOUT ENTIRE CROSS-SECTION. A VALLEY GUTTER IS NOT ALLOWED BETWEEN THE THROUGH LANE AND THE RIGHT TURN/DECELERATION LANE, OR IN THE BUS BAY/DECELERATION LANE.
3. THE SIDEWALK IS TO BE CONSTRUCTED ADJACENT TO THE BACK OF CURB FOR THE ENTIRE LANE LENGTH, BUS BAY/DECELERATION LANE ONLY.
4. BUS BAY / DECELERATION LANE SHALL BE CONSTRUCTED OF 9" MINIMUM CLASS 'A' CONCRETE.
5. REFER TO C-620 FOR SIGNING AND STRIPING.
6. MUST KEEP 8'x8' LANDING AREA (FROM BACK-OF-CURB) CLEAR OF OBSTRUCTIONS.

DETAIL NO.					DETAIL NO.
C-231	CITY OF CHANDLER STANDARD DETAIL	**RIGHT TURN/DECELERATION LANE FOR DRIVEWAYS**	APPROVED: CITY ENGINEER		**C-231**
NTS			DATE: 07-09-2015		NTS

R- 50' RIGHT-OF-WAY
R1 - 44' RADIUS (BACK-OF-CURB)
R2 - 26' MINIMUM RADIUS (BACK-OF-CURB)

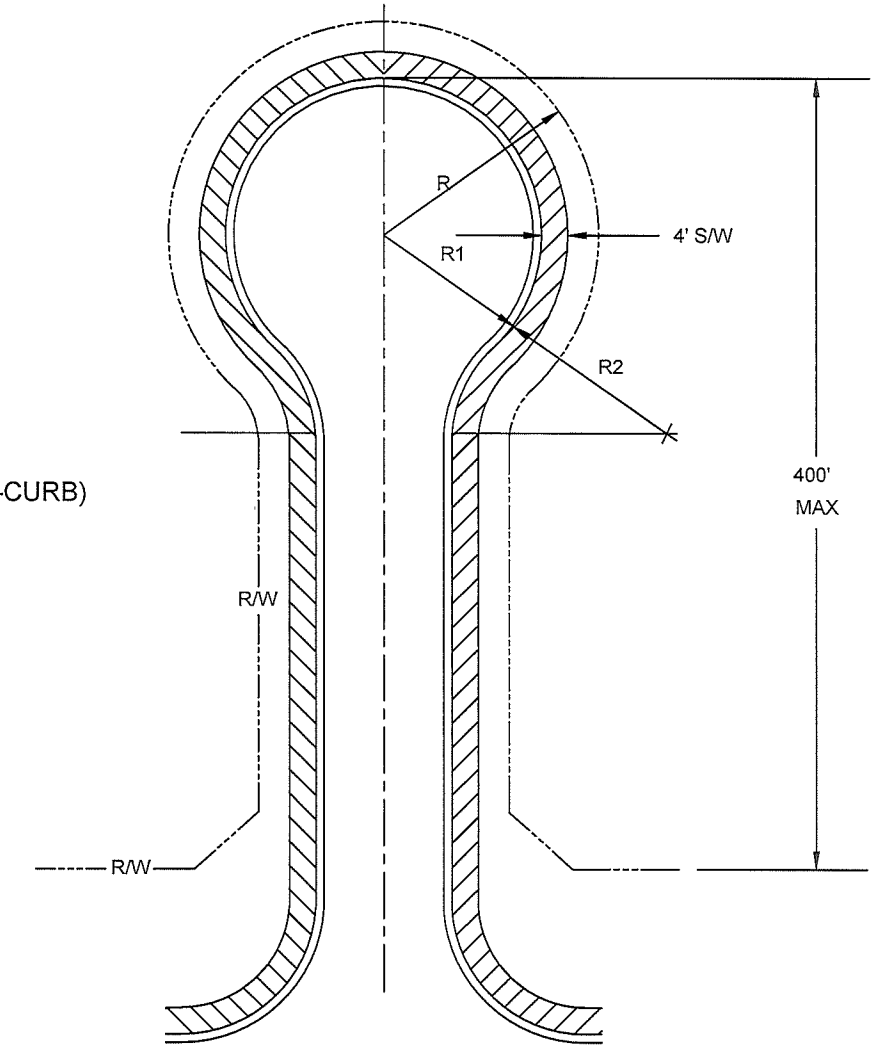

NOTE
SEE CITY OF CHANDLER STANDARD DETAIL C-213 FOR LOCAL ROAD REQUIREMENTS.

DETAIL NO. C-232 NTS	CITY OF CHANDLER STANDARD DETAIL	CUL-DE-SAC	APPROVED: CITY ENGINEER DATE: 07-09-2015	DETAIL NO. C-232 NTS

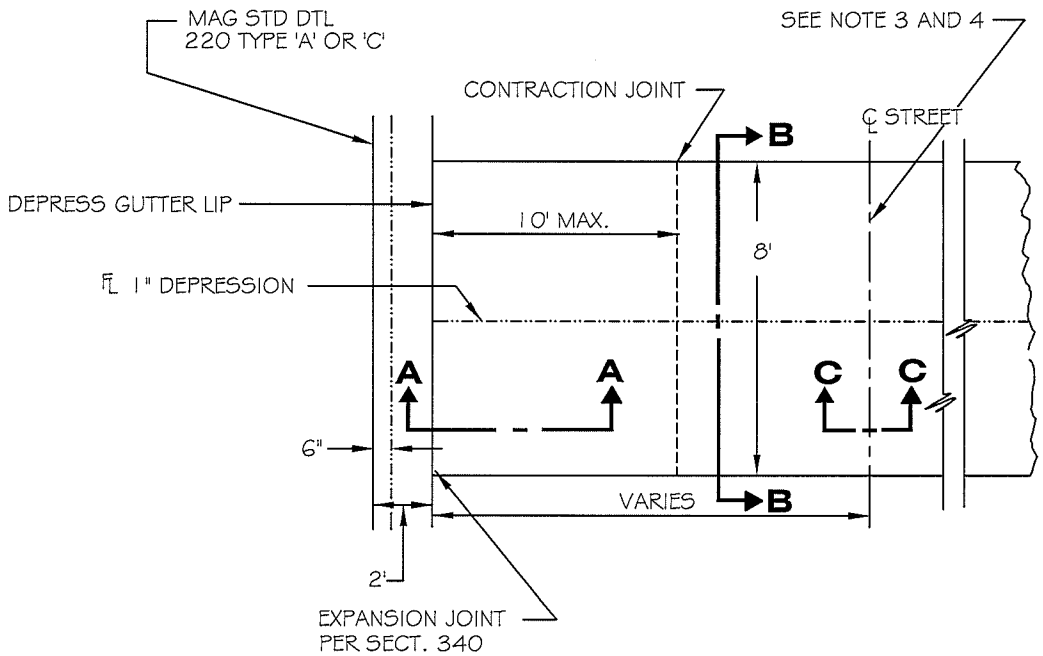

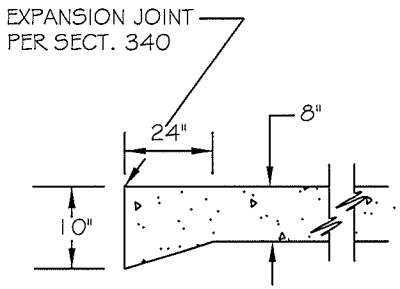

SECTION A-A

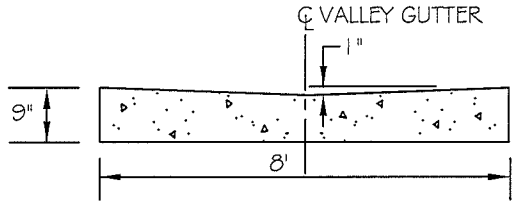

SECTION B-B

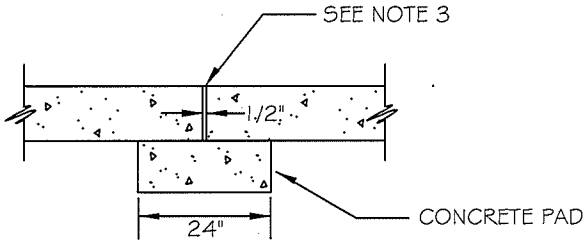

SECTION C-C

NOTES:

1. 8' MID-BLOCK VALLEY GUTTER IS TO BE USED ON LOCAL AND COLLECTOR STREETS ONLY.
2. ALL CONCRETE TO BE CLASS 'B' UNLESS OTHERWISE APPROVED. (SECT. 725)
3. EITHER CONSTRUCTION JOINT OR CONTRACTION JOINT IS REQUIRED AT CENTER LINE OF STREET.
4. A SEPARATE CONCRETE PAD IS REQUIRED AT CONSTRUCTION JOINTS PER MAG STD DTL 240, MODIFIED AS SHOWN.

DETAIL NO.					DETAIL NO.
C-233	CITY OF CHANDLER STANDARD DETAIL	**8' MID-BLOCK VALLEY GUTTER**	APPROVED: CITY ENGINEER		**C-233**
NTS			DATE: 07-09-2015		NTS

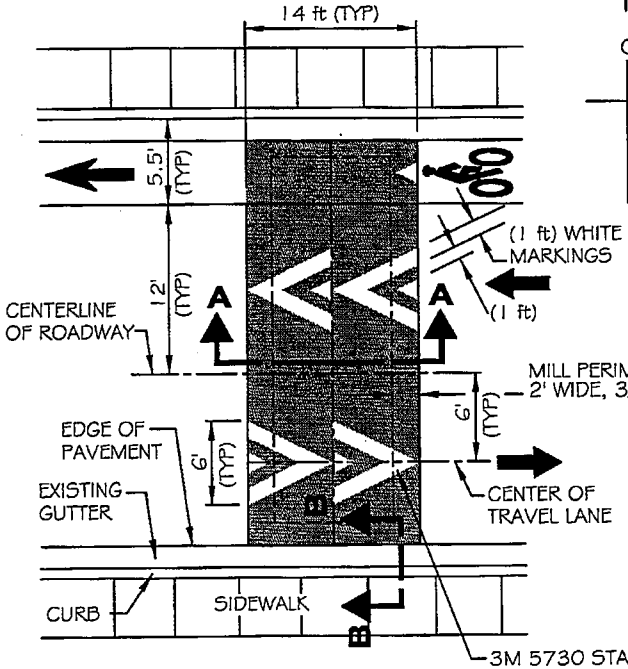

PLAN VIEW

3M 5730 STAYMARK WHITE REFLECTORIZED TAPE OR BRITE-LINE 2000 WHITE INTERSECTION PAVEMENT MARKING TAPE OR EQUAL IF APPROVED BY THE TRANSPORTATION STUDIES MANAGER.

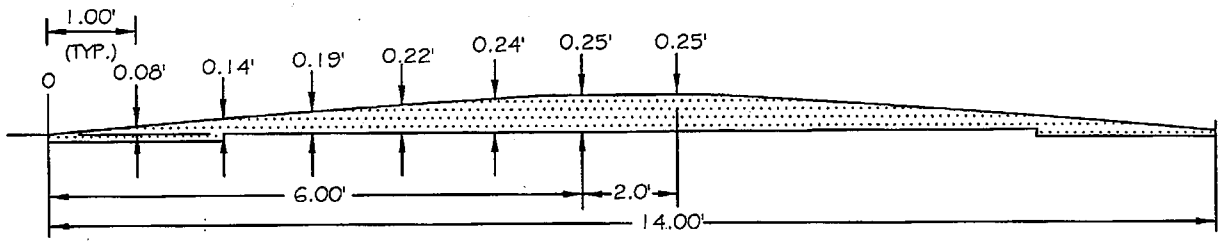

CROSS SECTION A-A

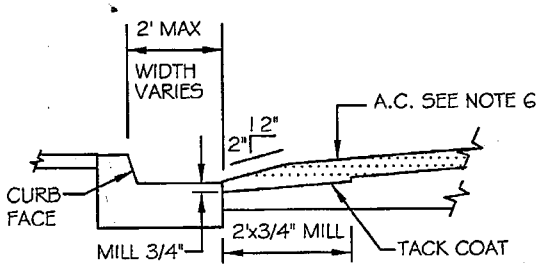

CROSS SECTION B-B

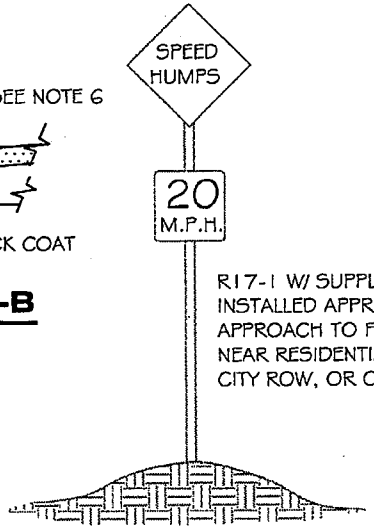

R17-1 W/ SUPPLEMENTAL PLATE TO BE INSTALLED APPROX. 150' IN ADVANCE OF APPROACH TO FIRST HUMP (TYP.), AT OR NEAR RESIDENTIAL PROPERTY LINE, WHEN CITY ROW, OR ON STREET LIGHT POLE.

NOTES:

1. HUMPS MUST BE THE FULL 0.25' FOR MAXIMUM EFFECT BUT SHALL NOT EXCEED 0.27'.
2. HUMPS CONSTRUCTED OVER 0.27' SHALL BE CORRECTED AT THE CONTRACTORS EXPENSE.
3. CROSS-SECTION ELEVATIONS SHALL HAVE A MAXIMUM TOLERANCE OF ± 0.02'.
4. SPEED HUMPS SHALL NOT BE PLACED OVER MANHOLES, WATER VALVES, JUNCTION STRUCTURES, ETC.
5. THE EXISTING ROADWAY SHALL BE MILLED TO A DEPTH OF 3/4", AROUND THE PERIMETER AS SHOWN. CROSS SECTION DIMENSIONS DO NOT INCLUDE THE 3/4" MILLING.
6. HUMP SHALL BE CONSTRUCTED WITH A12.5 MM EVAC MIX. A TACK COAT SHALL BE APPLIED PRIOR TO APPLICATION OF PAVEMENT.
7. SPEED HUMPS SHALL BE PLACED AT LOCATIONS APPROVED BY TRAFFIC ENGINEERING.
8. CONTACT TRAFFIC ENGINEERING (782-3454) ONE WEEK PRIOR TO INSTALLATION TO COORDINATE PAVEMENT MARKINGS AND SIGNING.

DETAIL NO.					DETAIL NO.
C-234	CITY OF CHANDLER STANDARD DETAIL	14' SPEED HUMP	APPROVED: CITY ENGINEER		C-234
NTS			DATE: 01/06/09		NTS

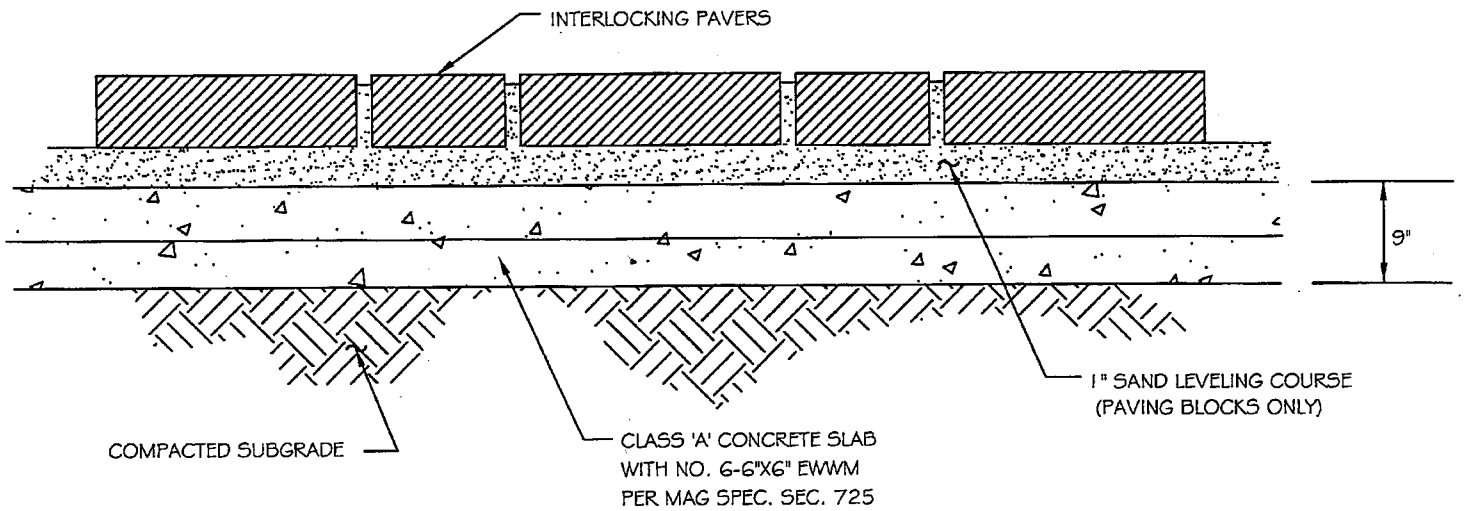

NOTES:

1. 12" MINIMUM CONCRETE RIBBON TO BE PLACED ON THE SIDES AND AT THE BEGINNING AND END OF PAVERS.
2. PROVIDE CITY STONE II, OLD TOWN BLEND PAVER AND PATTERN.
3. DEVELOPER SHALL SUPPLY THE CITY 100 EACH REPLACEMENT PAVERS.

DETAIL NO. **C-236** NTS	CITY OF CHANDLER STANDARD DETAIL	**INTERLOCKING PAVING BLOCKS AND DECORATIVE CONCRETE TRAVELED SURFACE**	APPROVED: CITY ENGINEER DATE: 01/08/09	DETAIL NO. **C-236** NTS

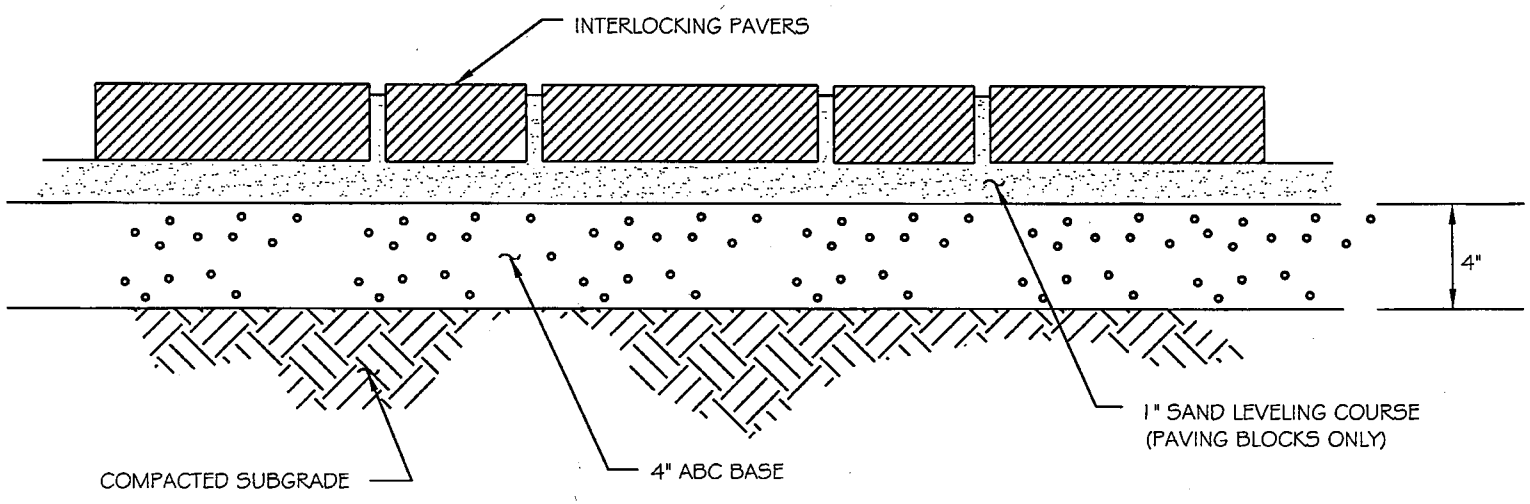

NOTES:

1. 12" MINIMUM CONCRETE RIBBON TO BE PLACED ON THE SIDES AND AT THE BEGINNING AND END OF PAVERS.
2. PROVIDE CITY STONE II, OLD TOWN BLEND PAVER AND PATTERN.
3. DEVELOPER SHALL SUPPLY CITY WITH 100 EACH REPLACEMENT PAVERS.

C-237 **REPLACES** **14B**	CITY OF CHANDLER STANDARD DETAIL	**INTERLOCKING PAVING BLOCKS AND DECORATIVE CONCRETE NON-TRAVELED SURFACE**	APPROVED: CITY ENGINEER DATE: 2/26/07	DETAIL NO. **C-237** NTS

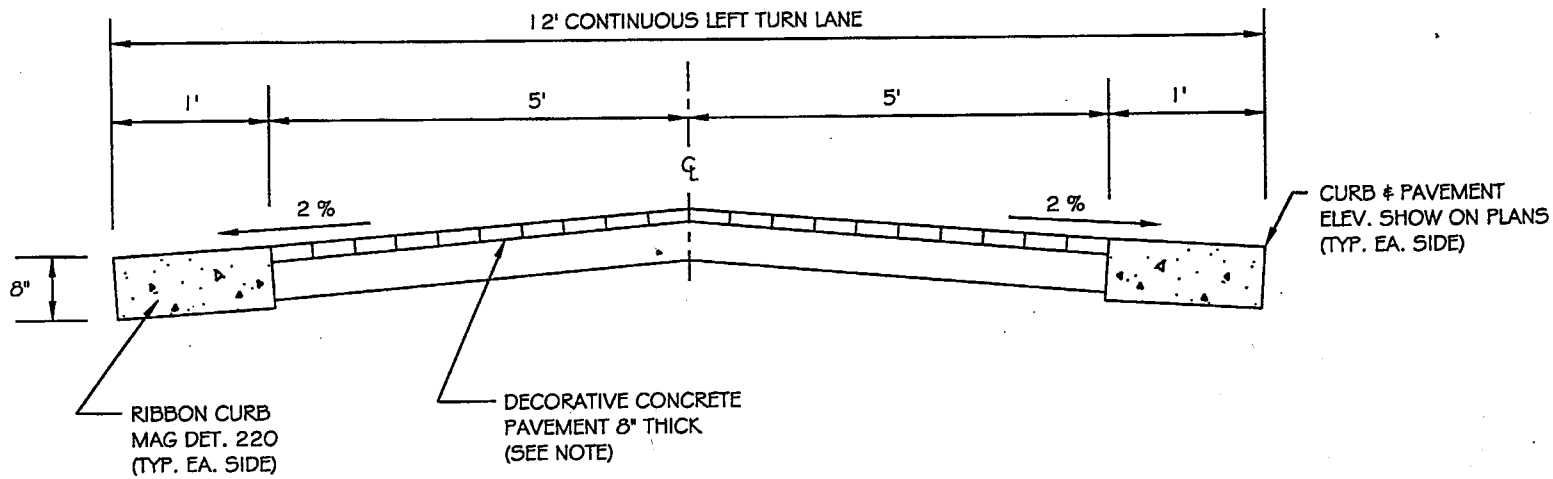

NOTE:

1. DECORATIVE CONCRETE SHALL BE COMMON BRICK PATTERN CONSTRUCTED IN ACCORDANCE WITH MAG SPEC. 340 WITH A MINIMUM THICKNESS OF 8". DECORATIVE SURFACE SHALL BE 3000 PSI MIX (6 SACK MIN.) IF NOT POURED MONOLITHICALLY IT SHALL BE POURED WITHIN 4 HOURS OF THE BASE COURSE WITH A MINIMUM THICKNESS OF 1-1/2" AND FINISHED IN ACCORDANCE WITH MANUFACTURERS RECOMMENDATIONS. COLOR TO BE APPROVED BY CITY ENGINEER.

C-238 **REPLACES** **14C**	CITY OF CHANDLER STANDARD DETAIL	**DECORATIVE CONCRETE AT GRADE TRAVELED SURFACE**	APPROVED: Bryan D. Patterson CITY ENGINEER DATE: 11-19-99	DETAIL NO. **C-238** NTS

BASE THICKNESS CHART

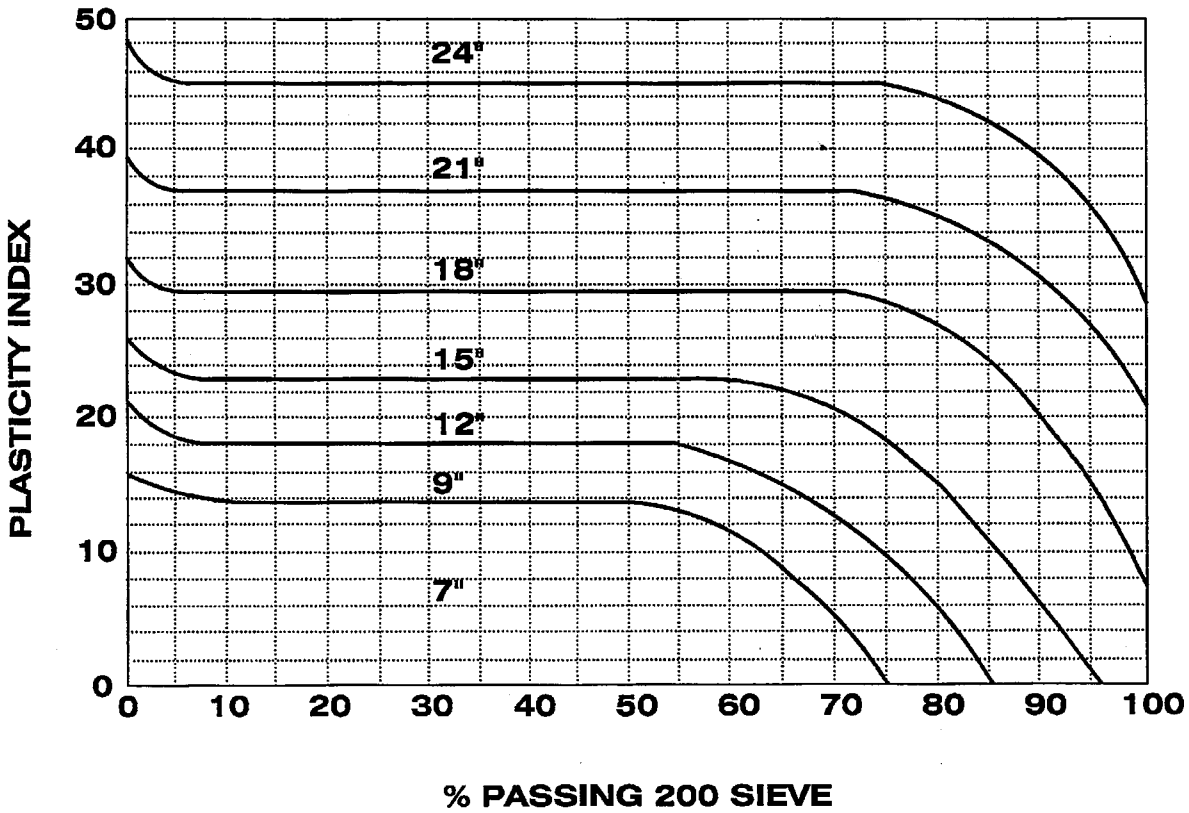

NOTES:

1. TOP 6" OF BASE SHALL BE ABC. BALANCE SHALL BE ABC OR SELECT MATERIAL.
2. MINIMUM DEPTH OF FLEXIBLE BASE COURSE REQUIRED UNDER 5" (MIN.) BIT. SURFACE.

DETAIL NO. **C-239** NTS	CITY OF CHANDLER STANDARD DETAIL	**DEPTH OF BASE COURSE MAJOR & MINOR ARTERIALS**	APPROVED: CITY ENGINEER DATE: 01/08/09	DETAIL NO. **C-239** NTS

BASE THICKNESS CHART

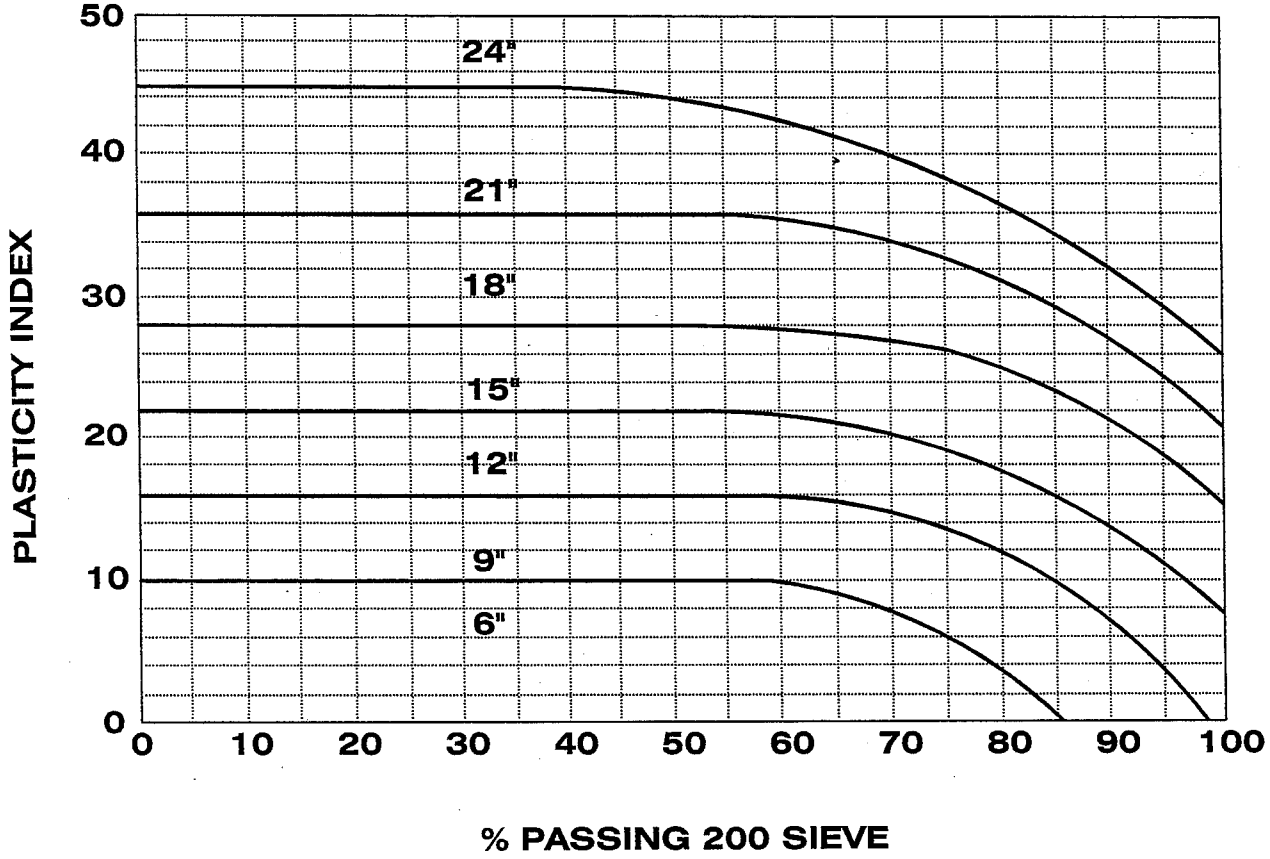

NOTES:

1. TOP 6" OF BASE SHALL BE ABC. BALANCE SHALL BE ABC OR SELECT MATERIAL.
2. MINIMUM DEPTH OF FLEXIBLE BASE COURSE REQUIRED UNDER 3" (MIN.) BIT. SURFACE.

DETAIL NO. **C-240** NTS	CITY OF CHANDLER STANDARD DETAIL	**DEPTH OF BASE COURSE NON RESIDENTIAL COLLECTOR & LOCAL STREETS**	APPROVED: CITY ENGINEER DATE: 01/14/16	DETAIL NO. **C-240** NTS

BASE THICKNESS CHART

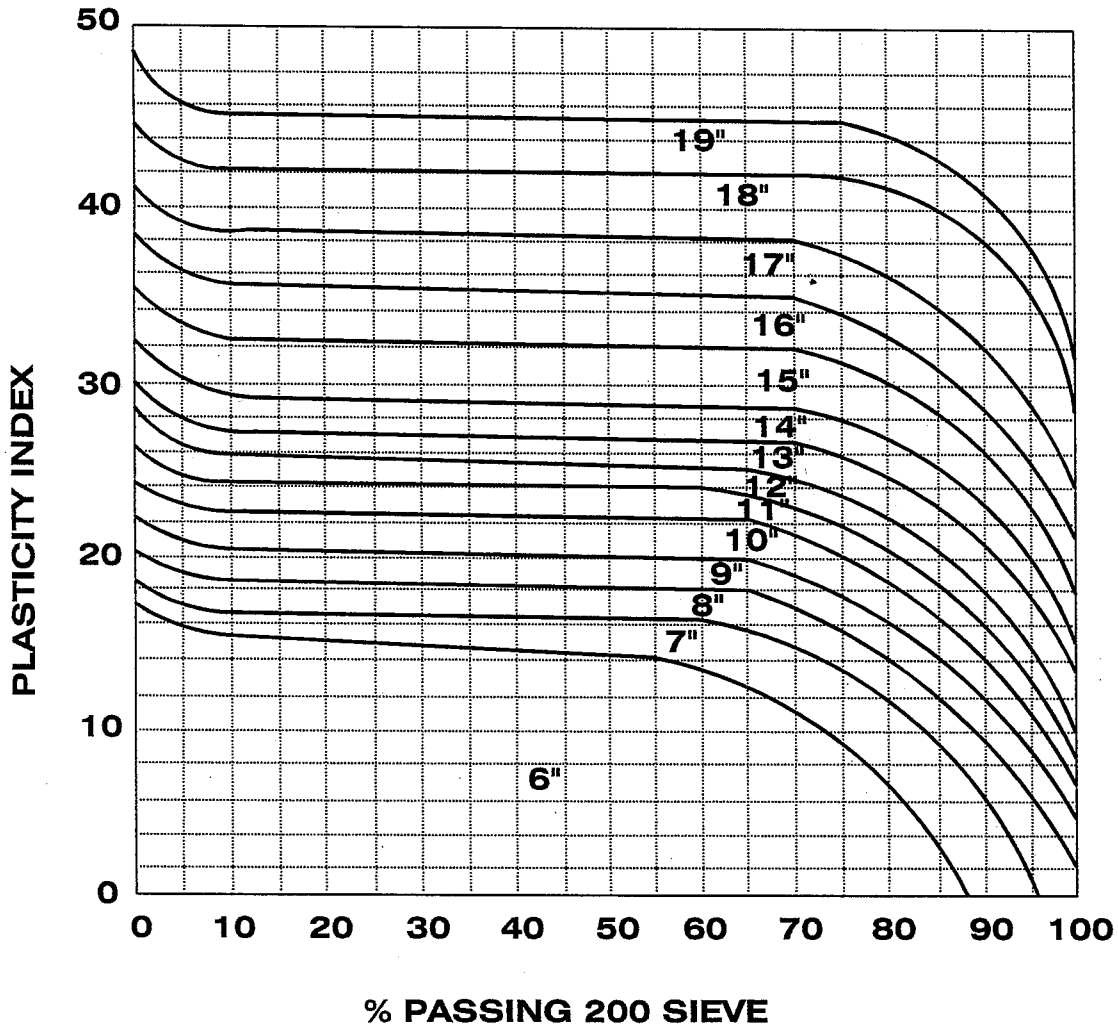

NOTES:

1. TOP 6" OF BASE SHALL BE ABC. BALANCE SHALL BE ABC OR SELECT MATERIAL.
2. MINIMUM DEPTH OF FLEXIBLE BASE COURSE REQUIRED UNDER 3" (MIN.) BIT. SURFACE.

DETAIL NO.					
C-241	CITY OF CHANDLER STANDARD DETAIL	DEPTH OF BASE COURSE COLLECTOR STREETS	APPROVED: CITY ENGINEER		DETAIL NO.
NTS			DATE: 01/14/10		C-241
					NTS

BASE THICKNESS CHART

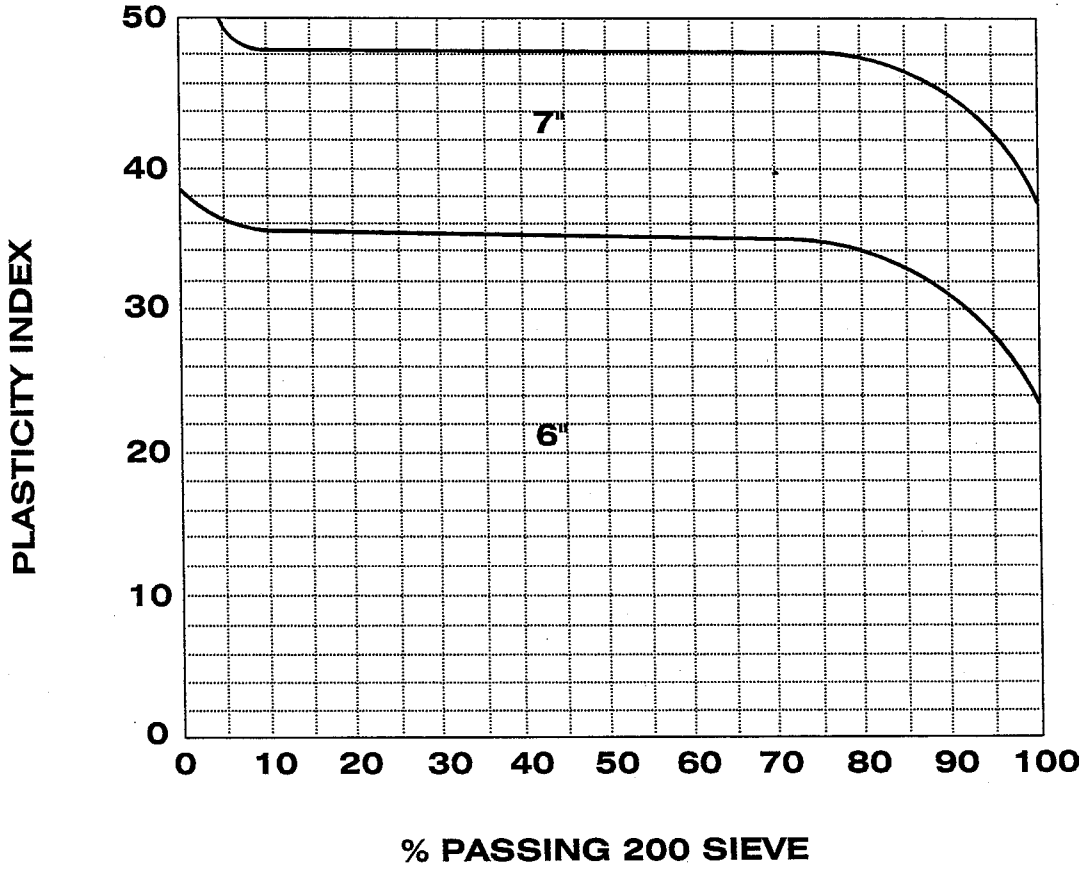

NOTE:

MINIMUM DEPTH OF FLEXIBLE BASE COURSE REQUIRED UNDER 3" (MIN.) BIT. SURFACE.

DETAIL NO. **C-242** NTS	CITY OF CHANDLER STANDARD DETAIL	**DEPTH OF BASE COURSE RESIDENTIAL LOCAL STREETS**	APPROVED: CITY ENGINEER DATE: 01/14/10	DETAIL NO. **C-242** NTS

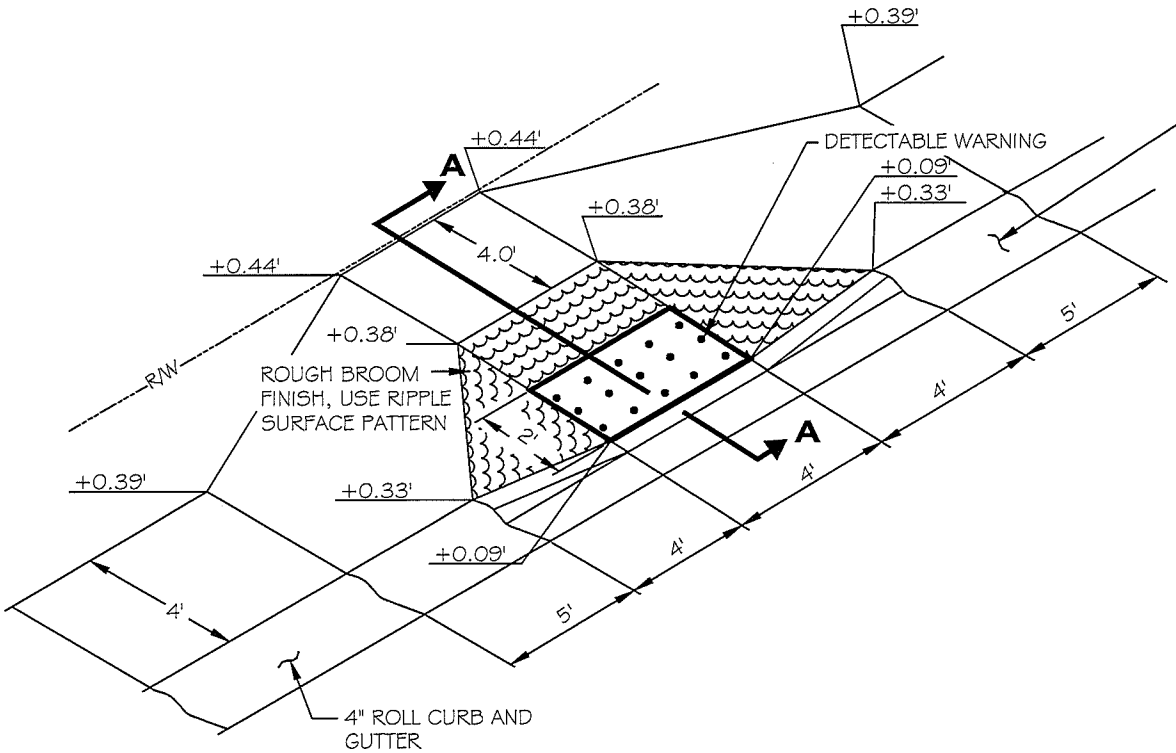

5' ROLL CURB TRANSITION PER MAG DTL 221, TYP.

NOTES:

1. CONTROL ELEVATIONS SHOWN ARE IN RELATION TO GUTTER FL ELEVATION = 0.00
2. CLASS 'B' CONC. CONSTRUCTION AS PER M.A.G. STD. SPEC. 725.
3. DETECTABLE WARNING PER APPROVED PRODUCTS LIST.

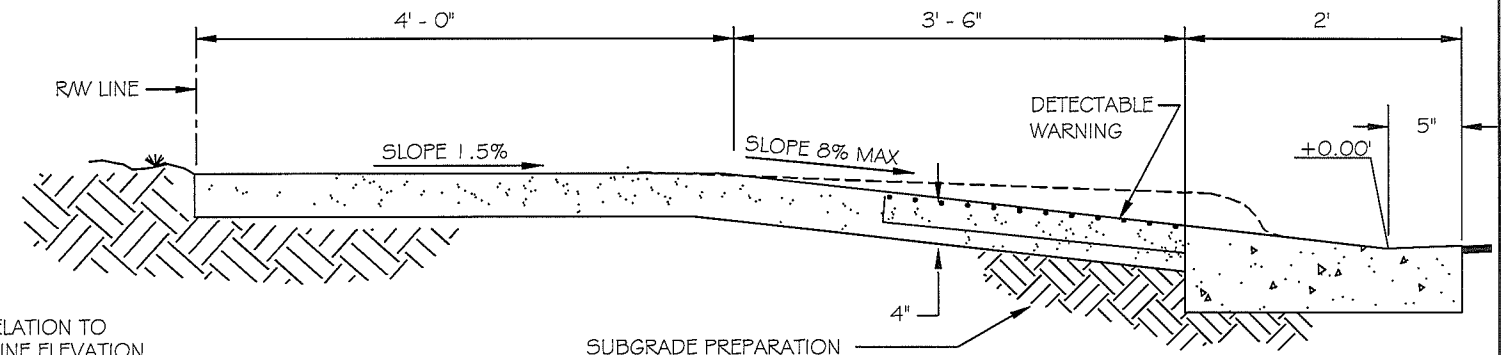

NOTE: ALL ELEVATIONS ARE IN RELATION TO ADJACENT GUTTER FLOW LINE ELEVATION.

SECTION A-A

DETAIL NO.					
C-243 NTS	CITY OF CHANDLER STANDARD DETAIL	**CURB RAMP FOR ROLL CURB**	APPROVED: CITY ENGINEER DATE: 07-09-2015	DETAIL NO. **C-243** NTS

NOTE:
DETECTABLE WARNING PER APPROVED PRODUCTS LIST.

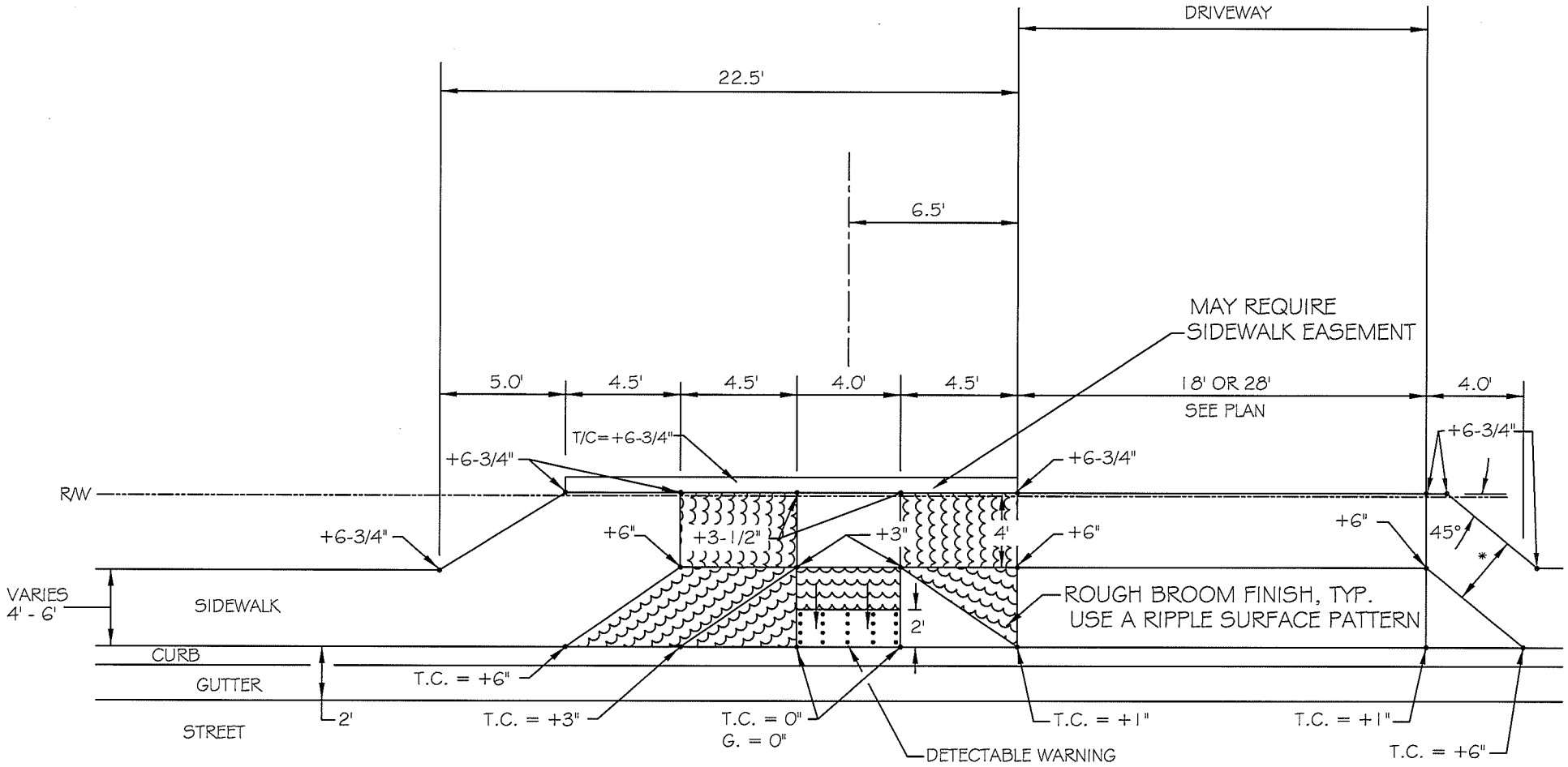

GUTTER ELEVATION = 0

CURB HEIGHT = 6"

* 4' CONSTANT WIDTH FOR 4' SIDEWALK
VARIABLE WIDTH FOR SIDEWALK GREATER THAN 4'

DETAIL NO.					DETAIL NO.
C-245	CITY OF CHANDLER STANDARD DETAIL	**COMBINED SIDEWALK RAMP AND RESIDENTIAL DRIVEWAY**	APPROVED: CITY ENGINEER		**C-245**
NTS			DATE: 1-9-14		NTS

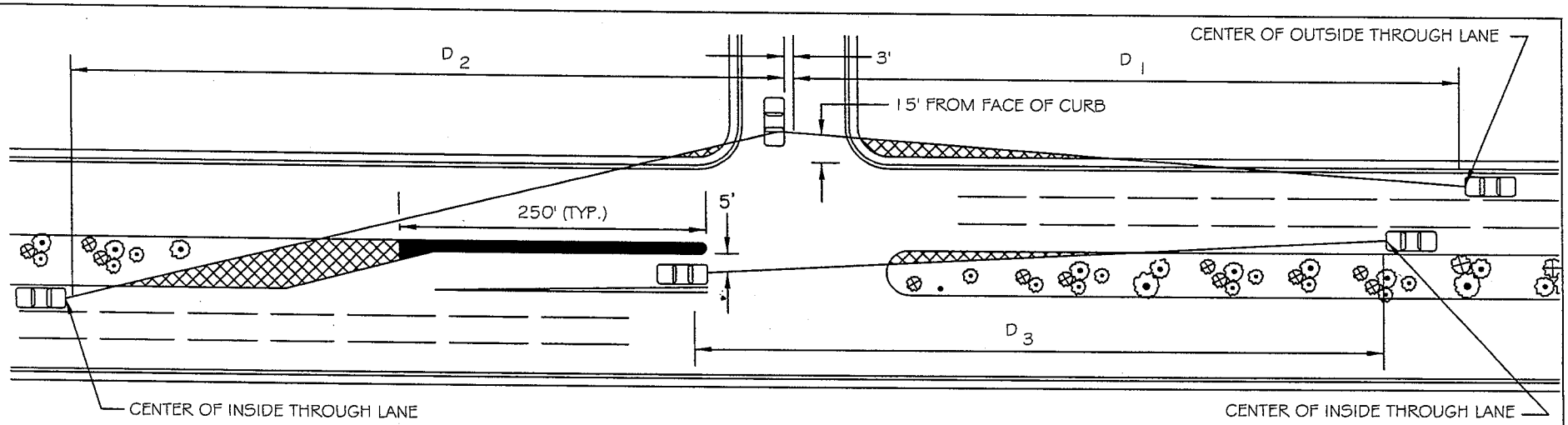

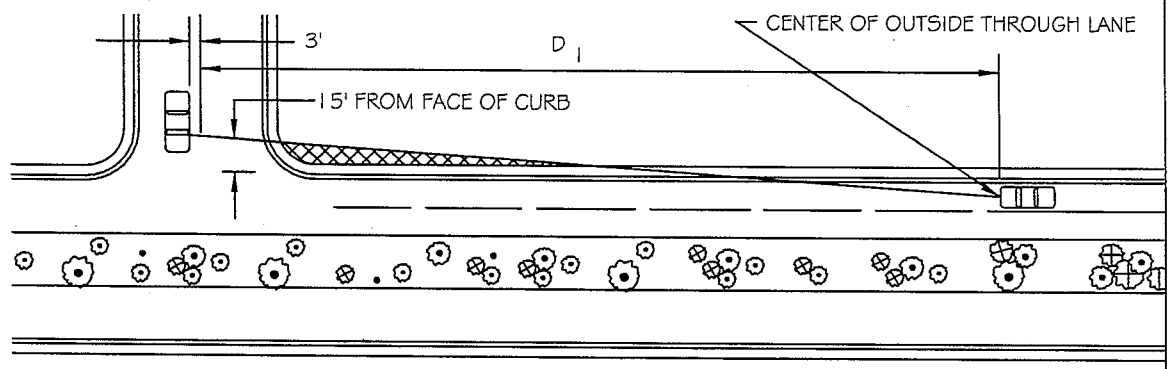

GROUND COVER, BUSHES, AND BOULDERS LESS THAN 24" (MATURE) IN HEIGHT, OR TREES TRIMMED TO 6' CLEARANCE ABOVE FINISHED GRADE ALLOWED IN THIS AREA. NO OTHER OBSTRUCTION ALLOWED UNLESS APPROVED BY THE CITY TRANSPORTATION ENGINEER.

FLUSH DECORATIVE PAVING, DECOMPOSED GRANITE, AND GROUND COVER LESS THAN 12" IN HEIGHT. ALL LANDSCAPE AND HARDSCAPE MATERIAL, AND OTHER DECORATIONS SHALL BE SUBMITTED FOR APPROVAL TO THE CITY TRANSPORTATION ENGINEER.

POSTED SPEED	RIGHT TURN ONTO THRU D_1	LEFT TURN ONTO THRU D_2	LEFT TURN FROM THRU D_3
30	310	400	290
35	360	470	340
40	410	530	380
45	460	600	430

DETAIL NO.
C-246
NTS

CITY OF CHANDLER STANDARD DETAIL

SIGHT DISTANCE FOR ARTERIAL AND COLLECTOR STREETS

APPROVED: Dean Hyl
CITY ENGINEER
DATE: 01-27-11

DETAIL NO.
C-246
NTS

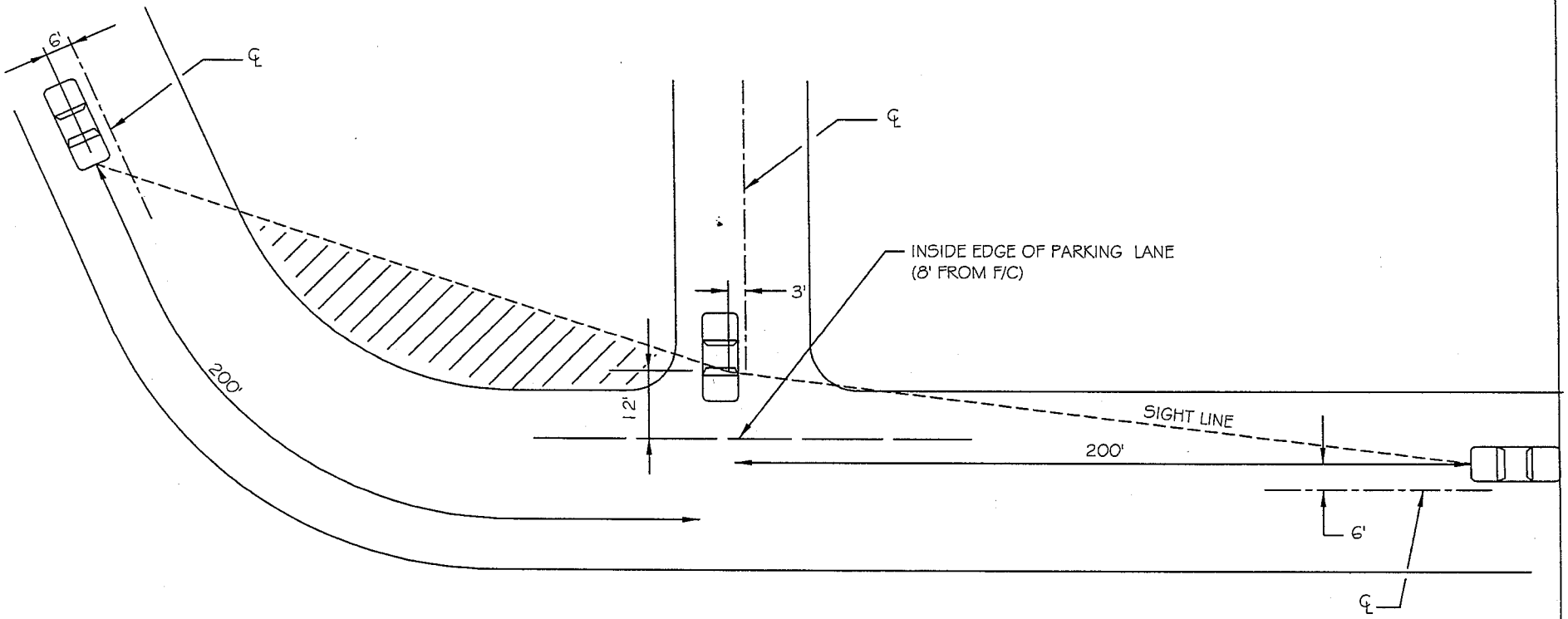

NOTE:

THIS STANDARD APPLIES ONLY TO DRIVEWAY AND CROSS-STREET ENTRIES ONTO STREETS WITH A 25 MPH SPEED LIMIT AND ON-STREET PARKING. ONCOMING VEHICLE MUST BE VISIBLE TO DRIVER OF ENTERING VEHICLE FOR AT LEAST 200 FEET FROM INTERSECTION, MEASURED ALONG PATH OF ONCOMING VEHICLE. NO GROUND COVER, SHRUBS, FLOWERS, MOUNDS, WALLS OR STRUCTURES OVER 24 INCHES IN HEIGHT ALLOWED ON STREET SIDE OF SIGHT LINE. TREES MUST BE TRIMMED TO 6 FEET ABOVE GROUND ON STREET SIDE OF SIGHT LINE.

DETAIL NO.					
C-247 NTS	CITY OF CHANDLER STANDARD DETAIL	**SIGHT DISTANCE FOR LOCAL STREETS**	APPROVED: CITY ENGINEER DATE: 01-27-11	DETAIL NO. **C-247** NTS	

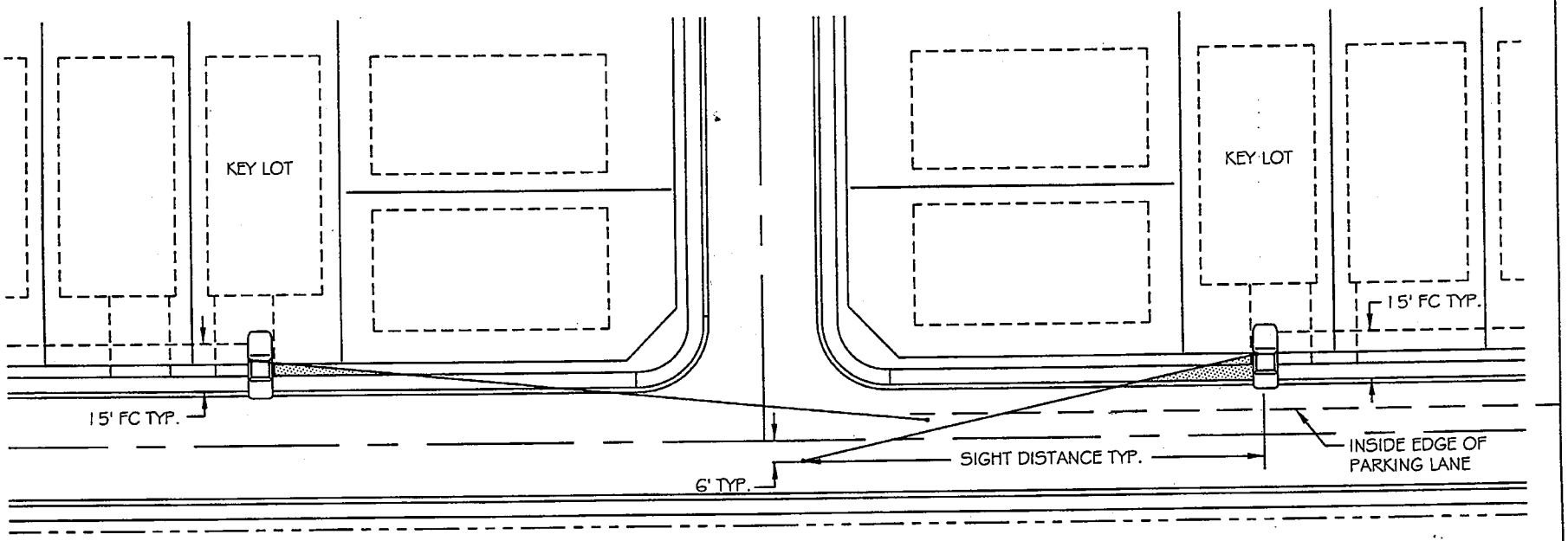

NOTES:

DRIVEWAY ON KEY LOTS NEED TO BE PLACED ON FAR SIDE OF LOT FROM REAR FENCE OF CORNER LOT.

NO STRUCTURES OR LANDSCAPING ABOVE 24" IN HEIGHT ALLOWED IN THIS AREA EXCEPT TREES WITH BRANCHES NOT LESS THAN 6' ABOVE THE GROUND.

DESIGN SPEED	SIGHT DISTANCE
25 MPH	200 FEET

DETAIL NO. C-248 NTS	CITY OF CHANDLER STANDARD DETAIL	**KEY LOT SIGHT DISTANCE**	APPROVED: CITY ENGINEER DATE: 11-19-99	DETAIL NO. C-248 NTS

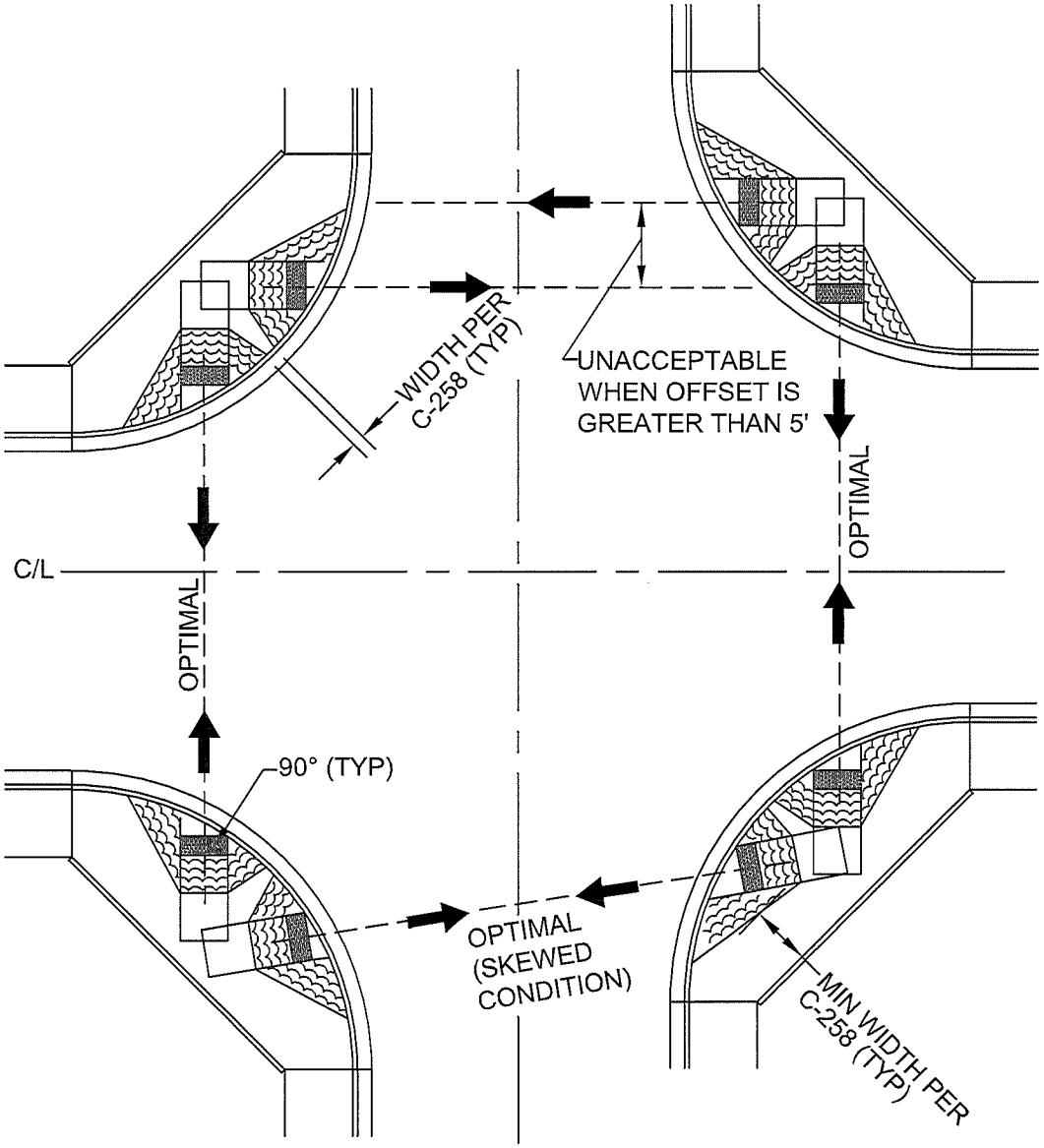

1. ALL RAMPS AND TRUNCATED DOMES SHALL BE ALIGNED SUCH THAT A LINE DRAWN PERPENDICULAR TO THE DOMES ALIGNS WITH THE CENTER OF THE OPPOSING RAMP (OPTIMAL). IN NO CASE SHALL SAID LINE BE GREATER THAN 5' FROM THE CENTER OF OPPOSING RAMP (UNACCEPTABLE).
2. PEDESTRIAN AND TRAFFIC CONTROL INCLUDING PAVEMENT MARKINGS AND SIGNAGE SHALL CONFORM TO CITY AND MUTCD REQUIREMENTS.
3. REFER TO THIS PROJECTS APPROVED PEDESTRIAN ROUTING PLAN FOR RAMP LOCATION.

DETAIL NO.					DETAIL NO.
C-249	CITY OF CHANDLER STANDARD DETAIL	**ACCESSIBLE CURB RAMP ALIGNMENT**	APPROVED: CITY ENGINEER		**C-249**
NTS			DATE: 07-09-2015		NTS

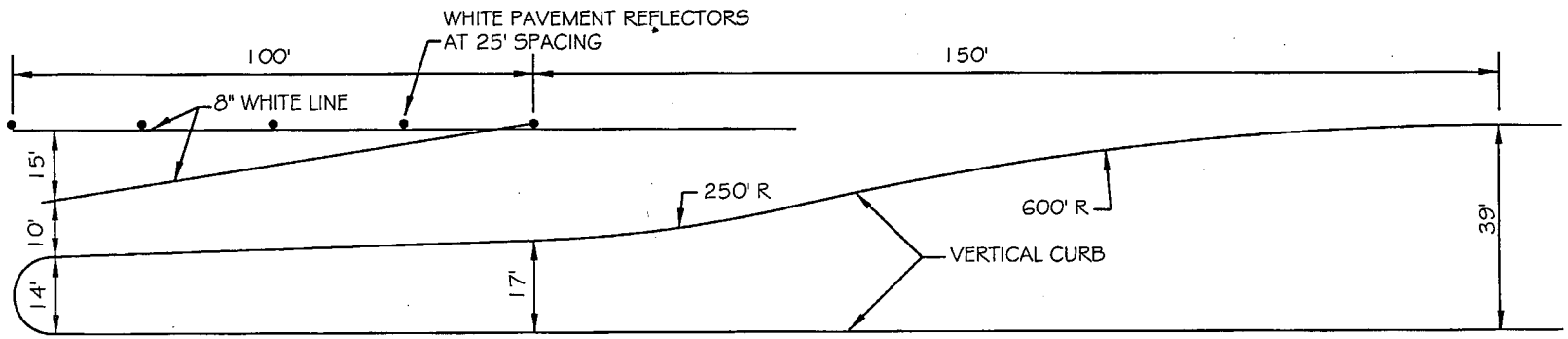

ALL WIDTHS ARE TO FACE OF CURB OR CENTER OF LANE LINE

DETAIL NO.					DETAIL NO.
C-250		CITY OF CHANDLER STANDARD DETAIL	**LEFT TURN BAY IN 40' MEDIAN DESIGN**	APPROVED: CITY ENGINEER DATE: 2/26/07	**C-250**
NTS					NTS

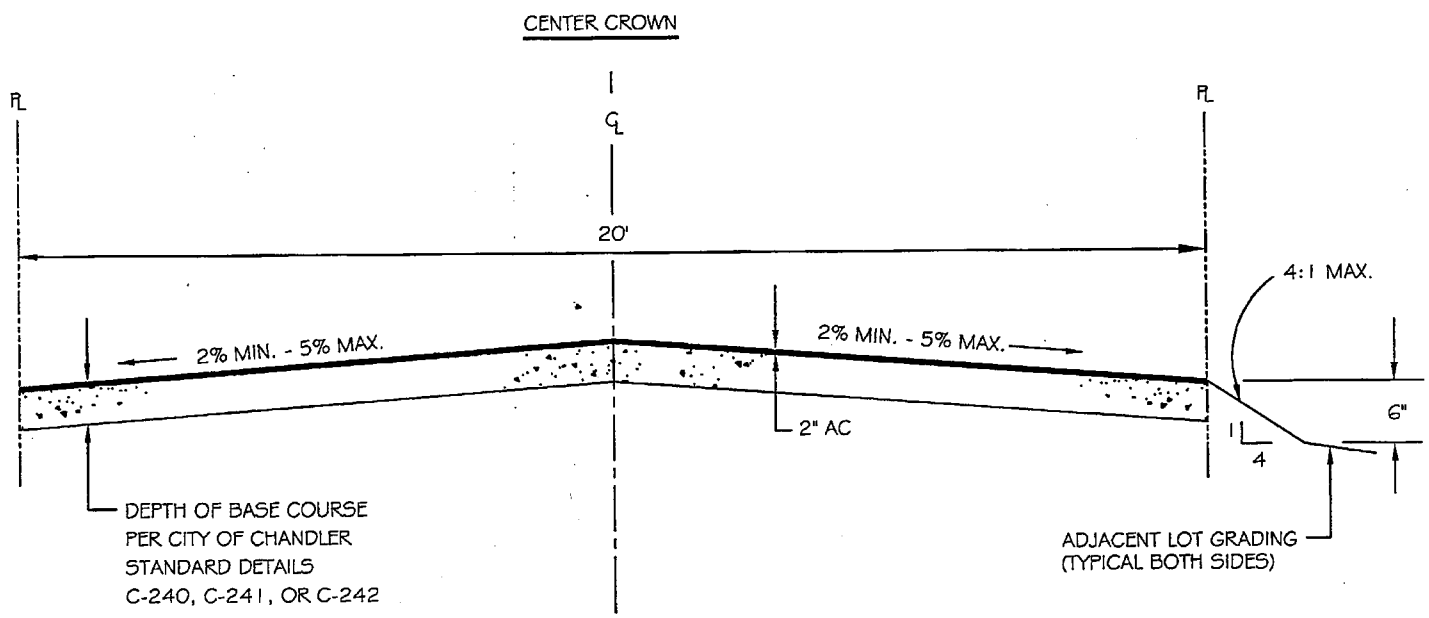

NOTES:

A. ASPHALTIC CONCRETE:
   1. MATERIAL: TYPE R19 EVAC MIX.
   2. COMPACTION TO BE TESTED IN ACCORDANCE WITH AASHTO T-99 METHOD A, AND T-191 OR ASTM D-2922 AND D-3017.
B. AGGREGATE BASE COURSE: CONFORMING TO SECTION 702.2 MAG STANDARD SPECIFICATIONS.
C. SUBGRADE PREPARATION: CONFORMING TO SECTION 301 MAG STANDARD SPECIFICATIONS

DETAIL NO.					DETAIL NO.
C-251	CITY OF CHANDLER STANDARD DETAIL	**ALLEY PAVEMENT LOT DRAINAGE FROM ALLEY**	APPROVED: CITY ENGINEER		**C-251**
NTS			DATE: 01/08/09		NTS

INVERTED CROWN

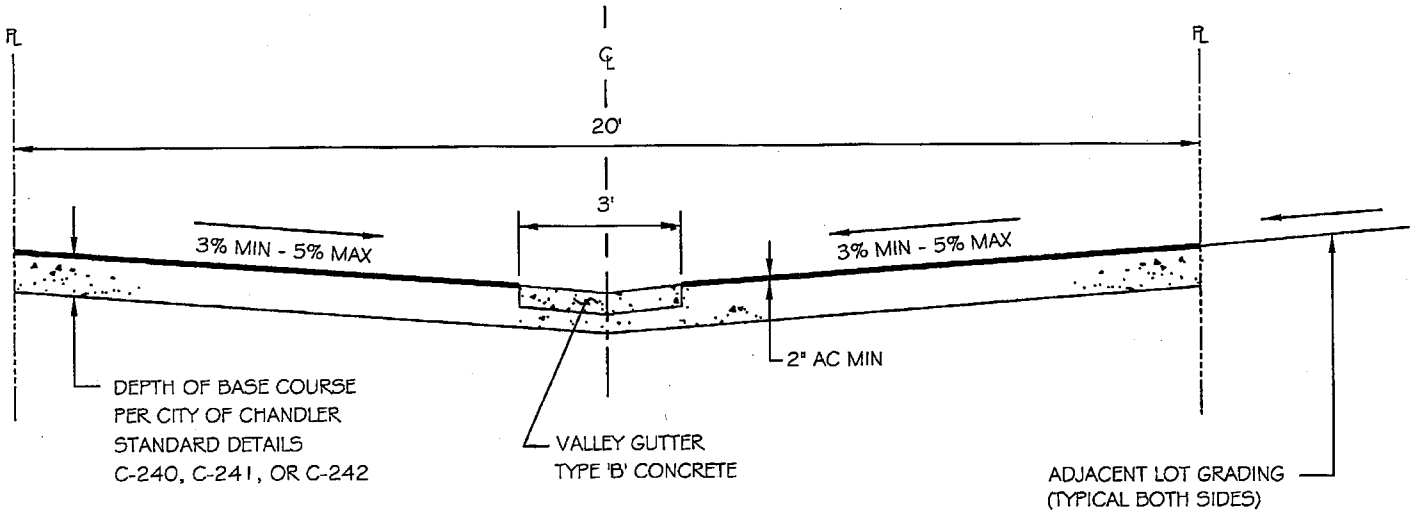

NOTES:

A. ASPHALTIC CONCRETE:
   1. MATERIAL: TYPE R19 EVAC MIX.
   2. COMPACTION TO BE TESTED IN ACCORDANCE WITH AASHTO T-99 METHOD A, AND T-191 OR ASTM D-2922 AND D-3017.

B. AGGREGATE BASE COURSE: CONFORMING TO SECTION 702.2 MAG STANDARD SPECIFICATIONS.

C. SUBGRADE PREPARATION: CONFORMING TO SECTION 301 MAG STANDARD SPECIFICATIONS

DETAIL NO.					DETAIL NO.
C-252	CITY OF CHANDLER STANDARD DETAIL	**ALLEY PAVEMENT**	APPROVED: CITY ENGINEER		**C-252**
NTS		**LOT DRAINAGE TO ALLEY**	DATE: 01/08/09		NTS

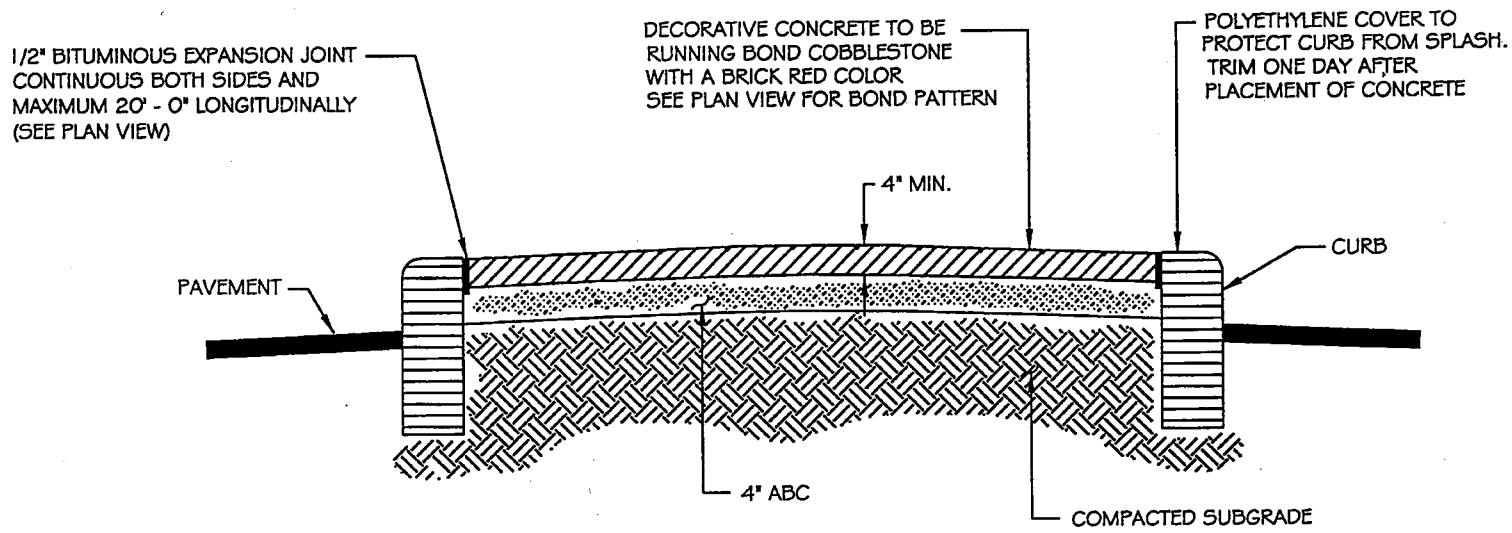

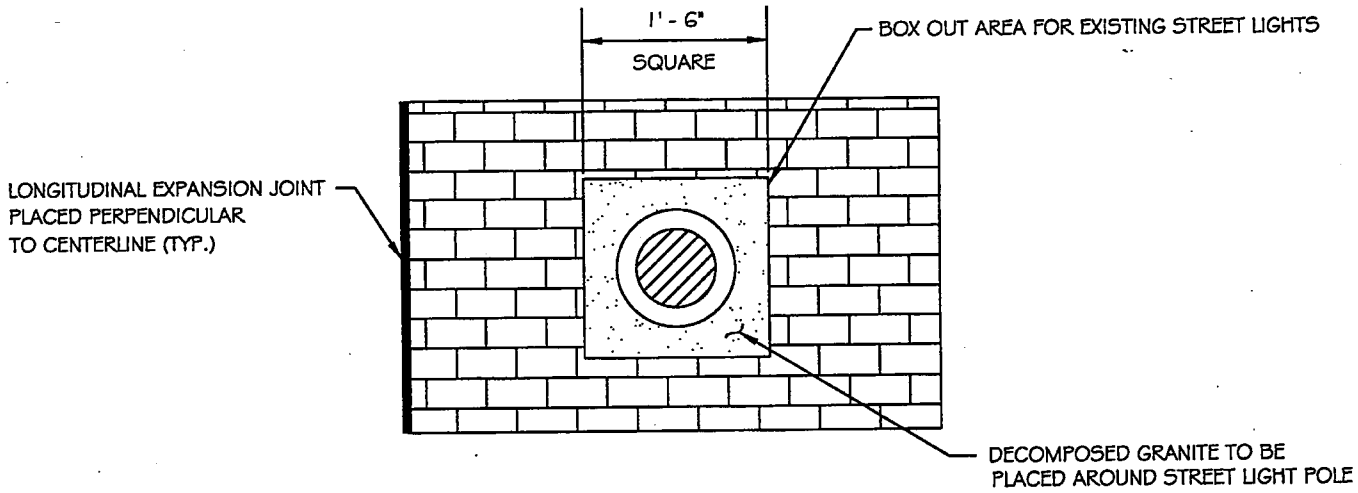

PLAN VIEW

C-253 **REPLACES** **37A**	CITY OF CHANDLER STANDARD DETAIL	**DECORATIVE CONCRETE**	APPROVED: Bryan D. Patterson CITY ENGINEER DATE: 11-19-99	DETAIL NO. **C-253** NTS

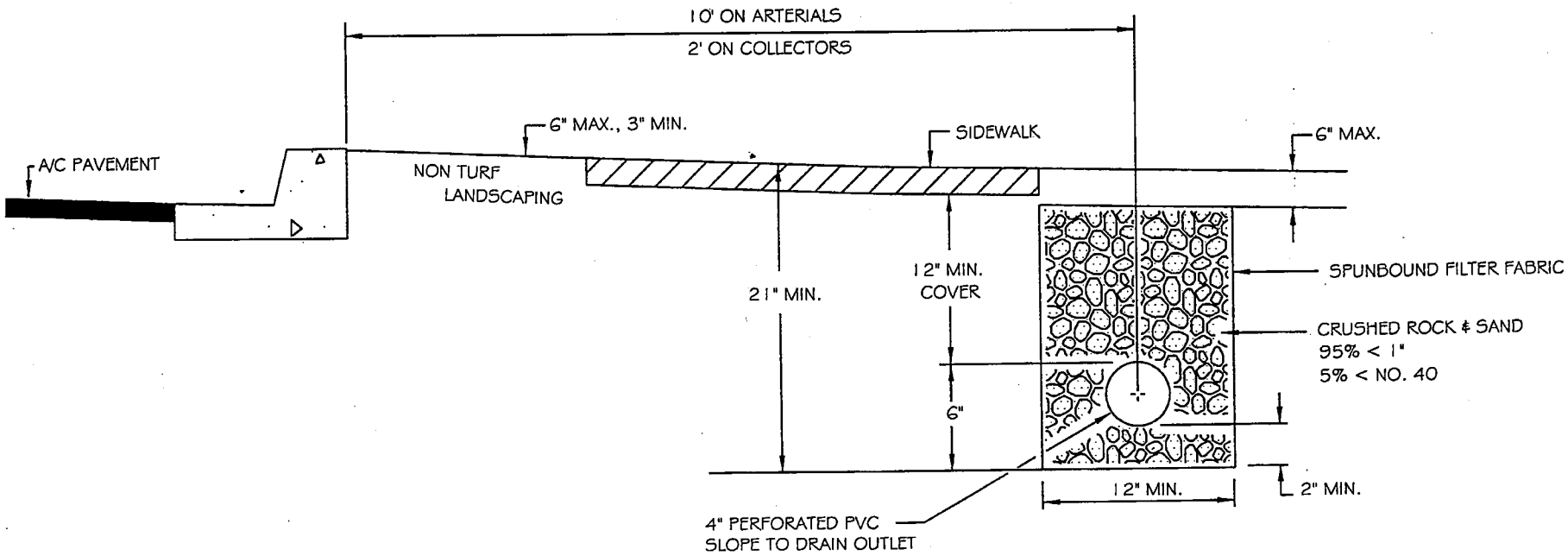

NOTES:

1. THIS DETAIL APPLIES ONLY TO AREAS THAT ARE TURF LANDSCAPED.
2. DRAIN MUST BE DESIGNED TO DISCHARGE TO RETENTION BASIN, STORM DRAIN OR DRYWELL.
3. MINIMUM SLOPE SHALL BE 0.2%.

DETAIL NO. **C-254** NTS	CITY OF CHANDLER STANDARD DETAIL	**ARTERIAL/COLLECTOR ROADWAY LANDSCAPE DRAINAGE**	APPROVED: CITY ENGINEER DATE: 11-19-99	DETAIL NO. **C-254** NTS

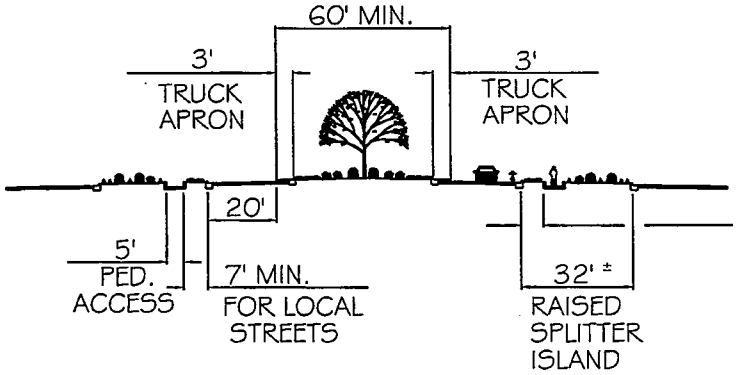

GROUND COVER, FLOWERS, AND GRANITE LESS THAN 24" (MATURE) IN HEIGHT, OR TREES TRIMMED TO 6' CLEARANCE ABOVE FINISHED GRADE ALLOWED IN THIS AREA.

SECTION AA
THROUGH SPLITTER/CENTER ISLAND

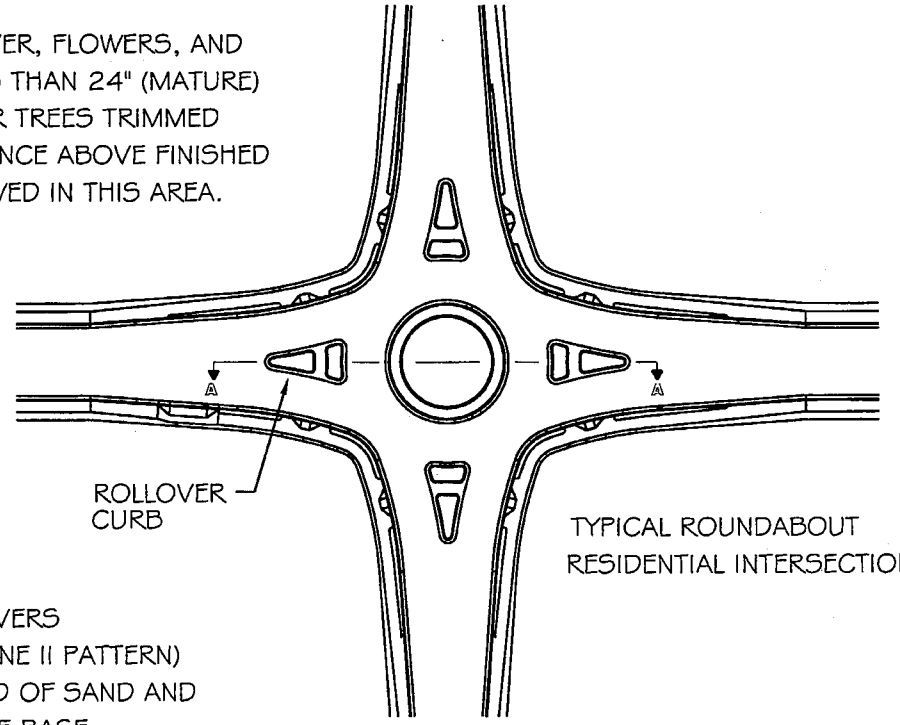

TYPICAL ROUNDABOUT
RESIDENTIAL INTERSECTION

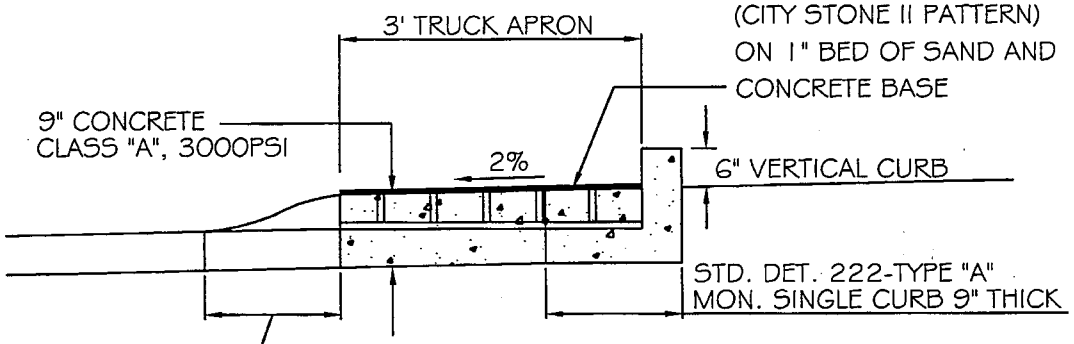

BRICK PAVERS
(CITY STONE II PATTERN)
ON 1" BED OF SAND AND
CONCRETE BASE

TRUCK APRON DETAIL

RESIDENTIAL COLLECTOR
RESIDENTIAL LOCAL
TYPICAL ROUNDABOUT
CENTER/SPLITTER ISLAND DETAIL
TRUCK APRON DETAIL

DETAIL NO.					DETAIL NO.
C-255	CITY OF CHANDLER STANDARD DETAIL	**TYPICAL ROUNDABOUT**	APPROVED: CITY ENGINEER		**C-255**
NTS			DATE: 2/26/07		NTS

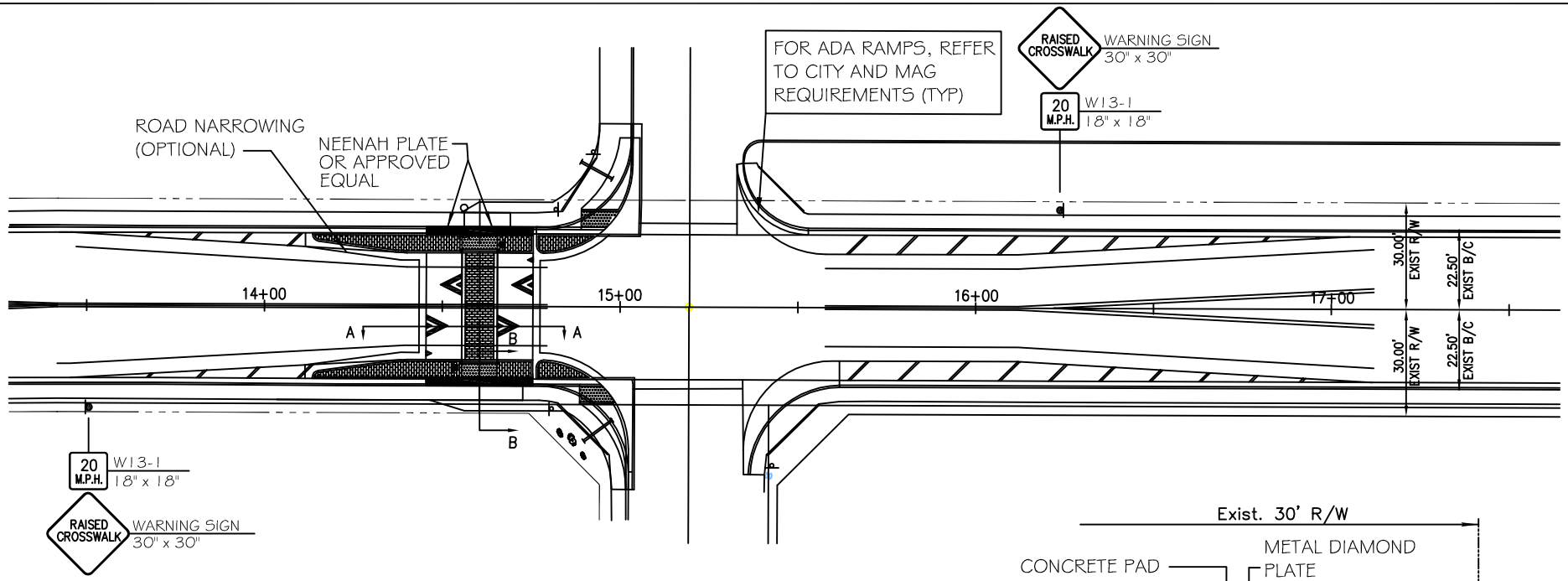

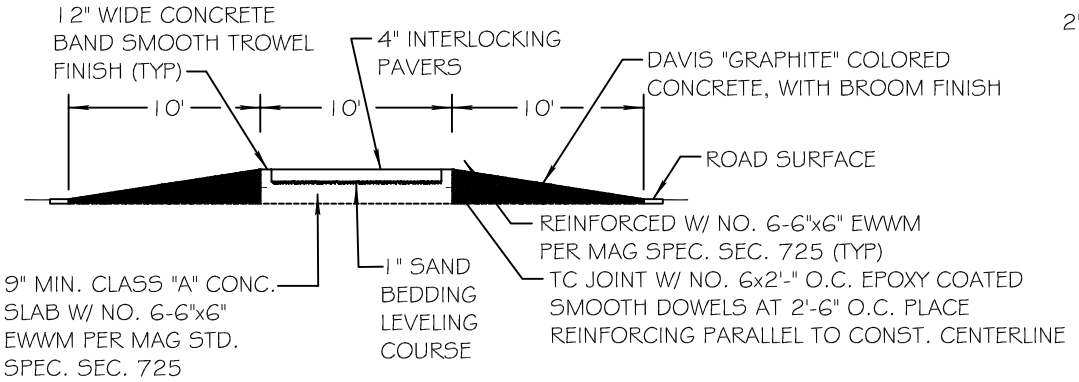

SECTION A-A
NTS

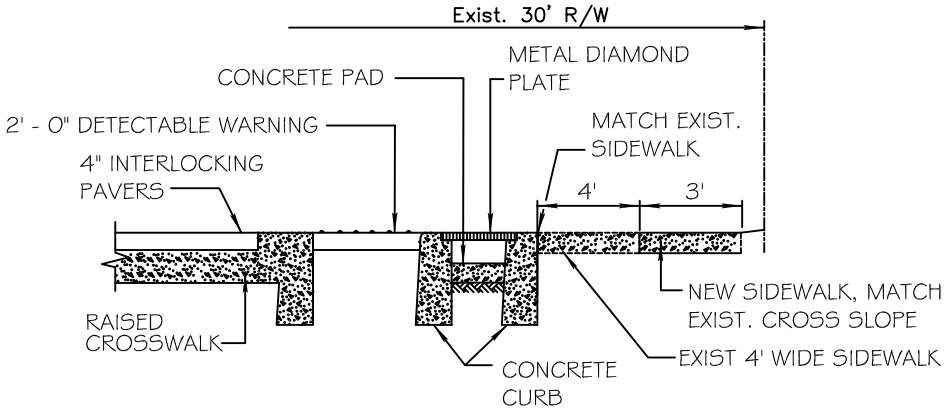

SECTION B-B
NTS

NOTES:

1. RETROFIT DESIGN SHOWN. NEW INSTALLATIONS MAY REQUIRE CURB, GUTTER, AND DRAINAGE FACILITIES TO BE DIFFERENT THAN SHOWN.
2. DETECTABLE WARNING SHALL CONSIST OF RAISED TRUNCATED DOMES MANUFACTURED BY CAST IN TAC, TEKWAY DOME TILES WITH ANCHOR SYSTEM, RAMP DOME SYSTEMS WITH METAL FRAME, ADA SOLUTIONS HEAVY DUTY COMPOSITE WET SET REPLACEABLE TILES WITH ANCHORS, OR APPROVED EQUAL. COLOR SHALL BE TERRACOTTA. INSTALLATION SHALL BE IN ACCORDANCE WITH MANUFACTURER'S RECOMMENDATIONS.

DETAIL NO.					DETAIL NO.
C-256	CITY OF CHANDLER STANDARD DETAIL	**TYPICAL RAISED CROSSWALK**	APPROVED: CITY ENGINEER		**C-256**
NTS			DATE: 3/14/2013		NTS

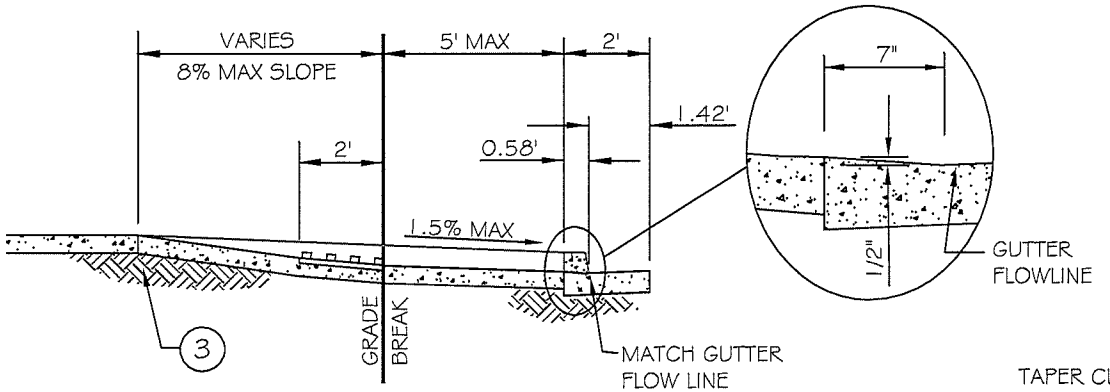

SECTION A-A

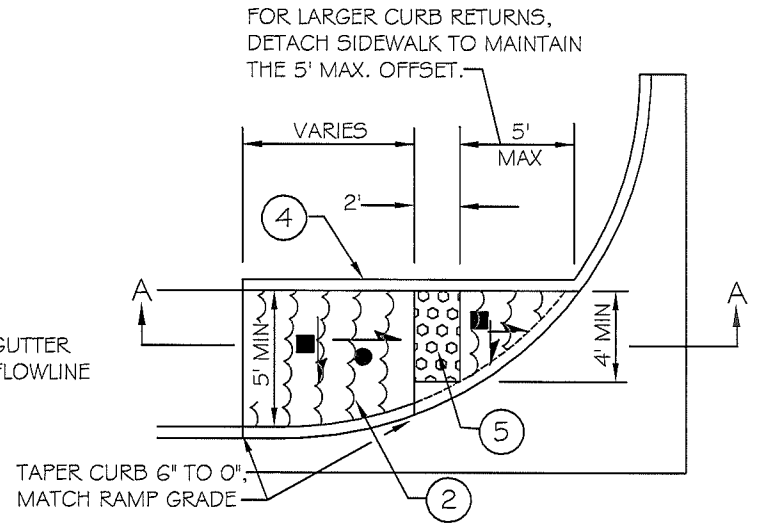

PLAN VIEW-ATTACHED SIDEWALK

NOTES:

1. CLASS "B" CONCRETE PER MAG SECTION 725.
2. LIMITS OF HEAVY ROUGH BROOM FINISH.
3. SUBGRADE PREPARATION PER MAG SECTION 301.
4. 6" SINGLE CURB PER MAG STD. DTL. 222.
5. DETECTABLE WARNING PER APPROVED PRODUCTS LIST.

LEGEND:

● 8% MAXIMUM SLOPE

■ 1.5% MAXIMUM SLOPE

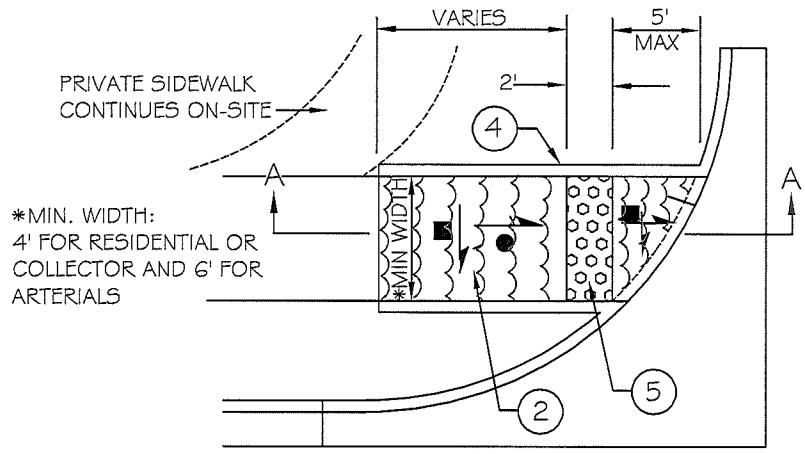

PLAN VIEW-DETACHED SIDEWALK

DETAIL NO.					DETAIL NO.
C-257	CITY OF CHANDLER STANDARD DETAIL	**IN-LINE RAMP DETAIL FOR RETURN TYPE DRIVEWAY**	APPROVED: CITY ENGINEER		**C-257**
NTS			DATE: 07-09-2015		NTS

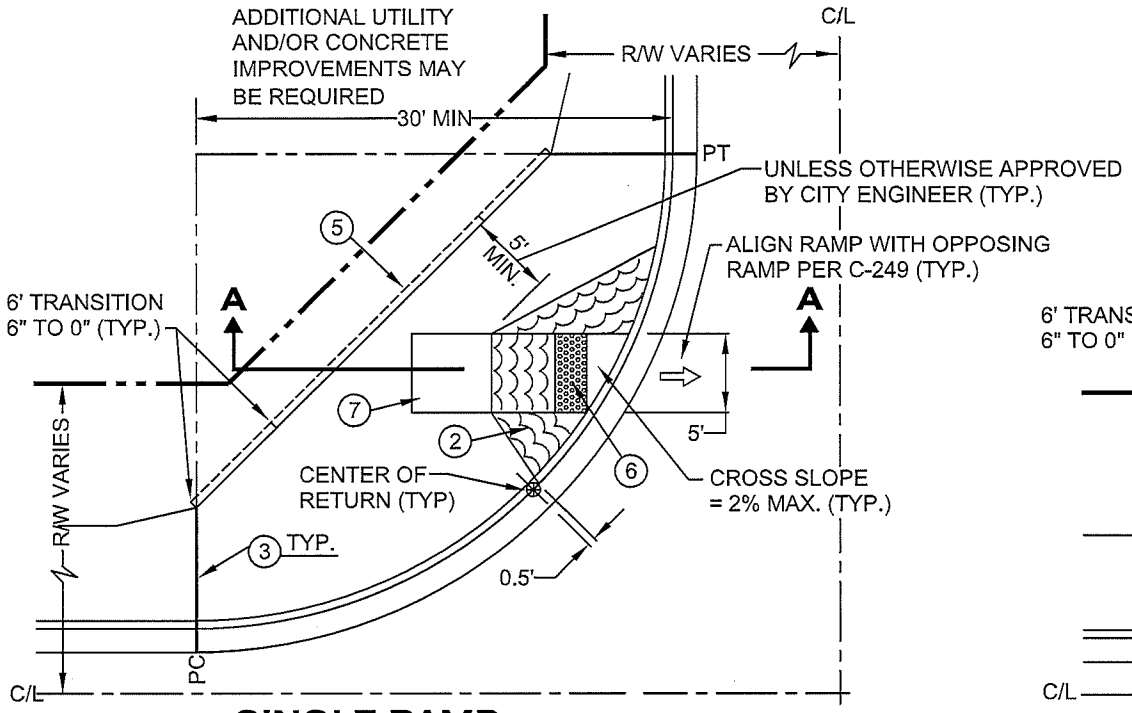

SINGLE RAMP

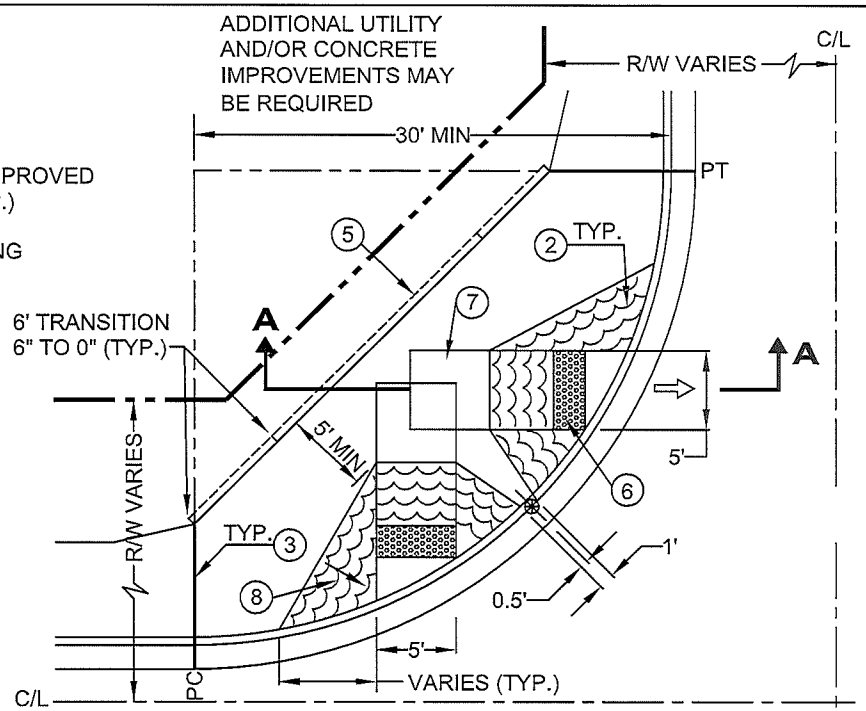

DUAL RAMP

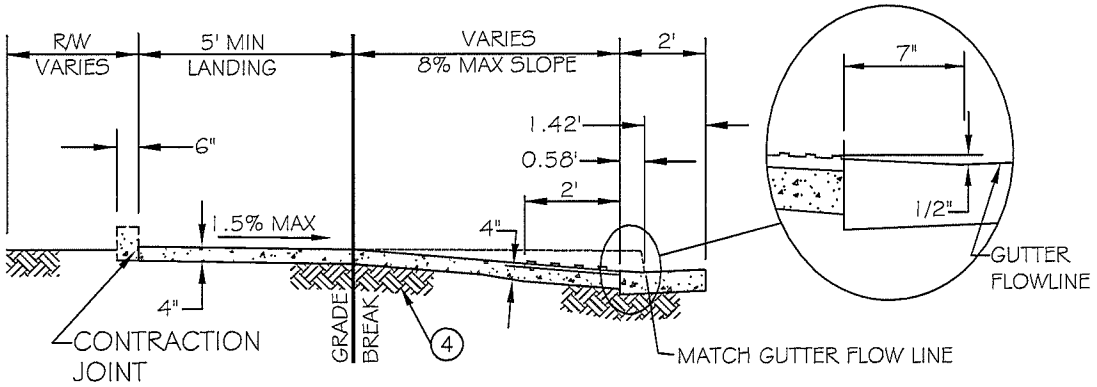

SECTION A-A

NOTES

1. CLASS "B" CONCRETE PER MAG SECTION 725.
2. LIMITS OF HEAVY ROUGH BROOM FINISH (TYP.)
3. EXPANSION JOINTS PER MAG SECTION 340.
4. SUBGRADE PREPARATION PER MAG SECTION 301.
5. OPTIONAL 6" CURB WITH 3' MIN. TRANSITION AS SHOWN, UNLESS OTHERWISE DIRECTED.
6. 2'x5' DETECTABLE WARNING PER APPROVED PRODUCTS LIST.
7. MUST MAINTAIN A 5'x5' LANDING PAD (TYP.)
8. 10% MAXIMUM WING SLOPE, ADJUST WING LENGTH AS NECESSARY (TYP.)

DETAIL NO.					DETAIL NO.
C-258	CITY OF CHANDLER STANDARD DETAIL	DIRECTIONAL CURB RAMP ARTERIAL STREETS	APPROVED: CITY ENGINEER		C-258
PAGE 1 OF 3			DATE: 07-09-2015		PAGE 1 OF 3

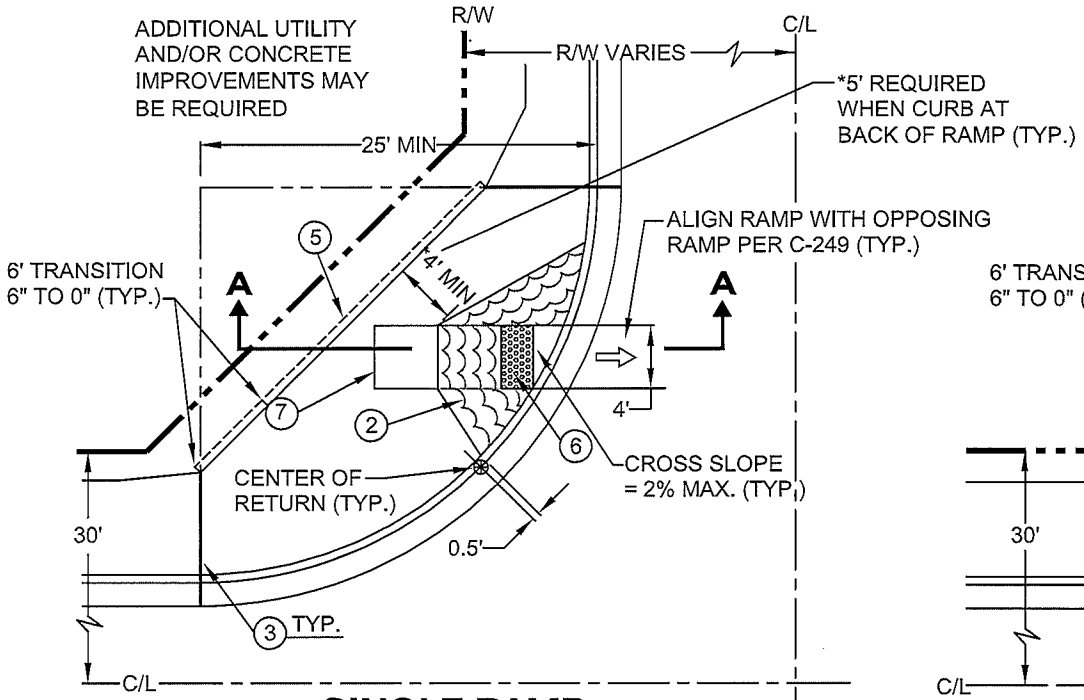

SINGLE RAMP

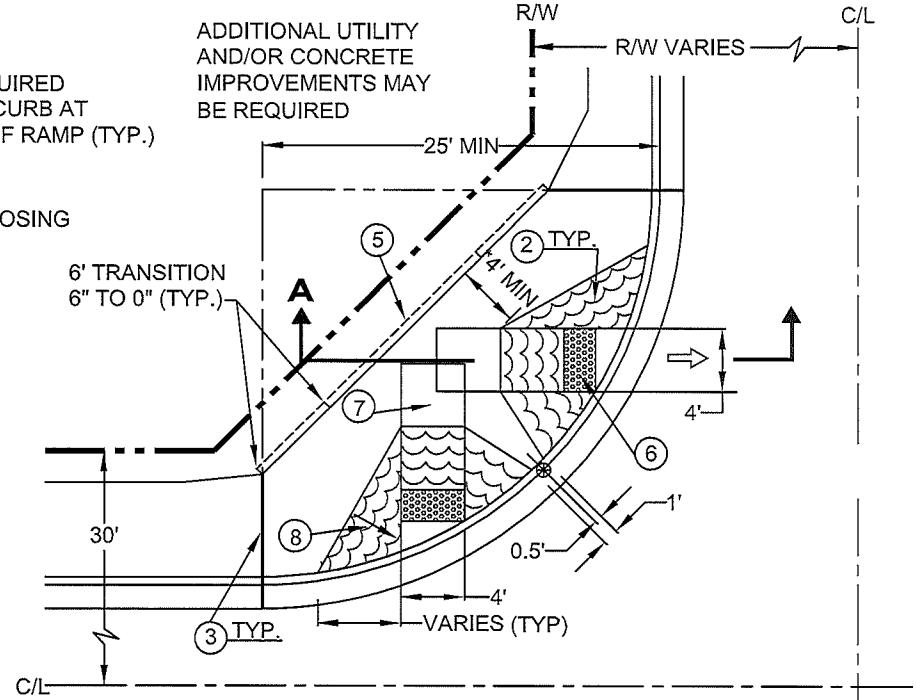

DUAL RAMP

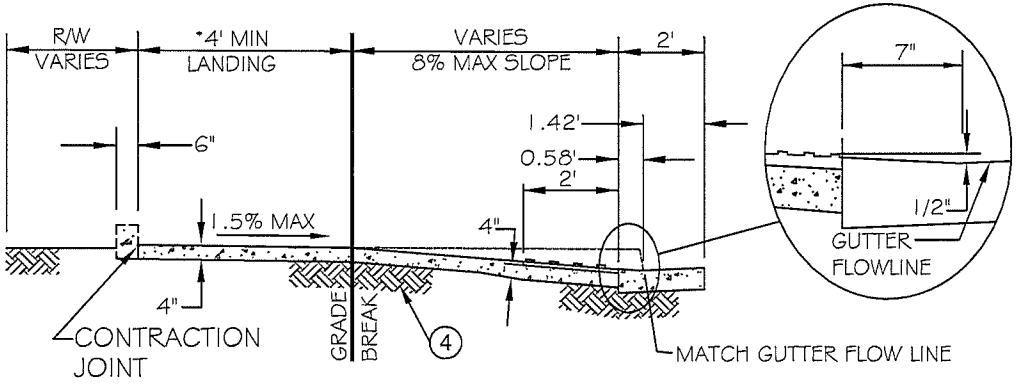

SECTION A-A

NOTES

1. CLASS "B" CONCRETE PER MAG SECTION 725.
2. LIMITS OF HEAVY ROUGH BROOM FINISH (TYP.)
3. EXPANSION JOINTS PER MAG SECTION 340.
4. SUBGRADE PREPARATION PER MAG SECTION 301.
5. OPTIONAL 6" CURB WITH 3' MIN. TRANSITION AS SHOWN, UNLESS OTHERWISE DIRECTED.
6. 2'x4' DETECTABLE WARNING PER APPROVED PRODUCTS LIST.
7. MUST MAINTAIN A 4'x4' LANDING PAD (TYP.)
8. 10% MAXIMUM WING SLOPE, ADJUST WING LENGTH AS NECESSARY (TYP.)

DETAIL NO. C-258 PAGE 2 OF 3	CITY OF CHANDLER STANDARD DETAIL	DIRECTIONAL CURB RAMP COLLECTOR STREETS	APPROVED: CITY ENGINEER DATE: 07-09-2015	DETAIL NO. C-258 PAGE 2 OF 3

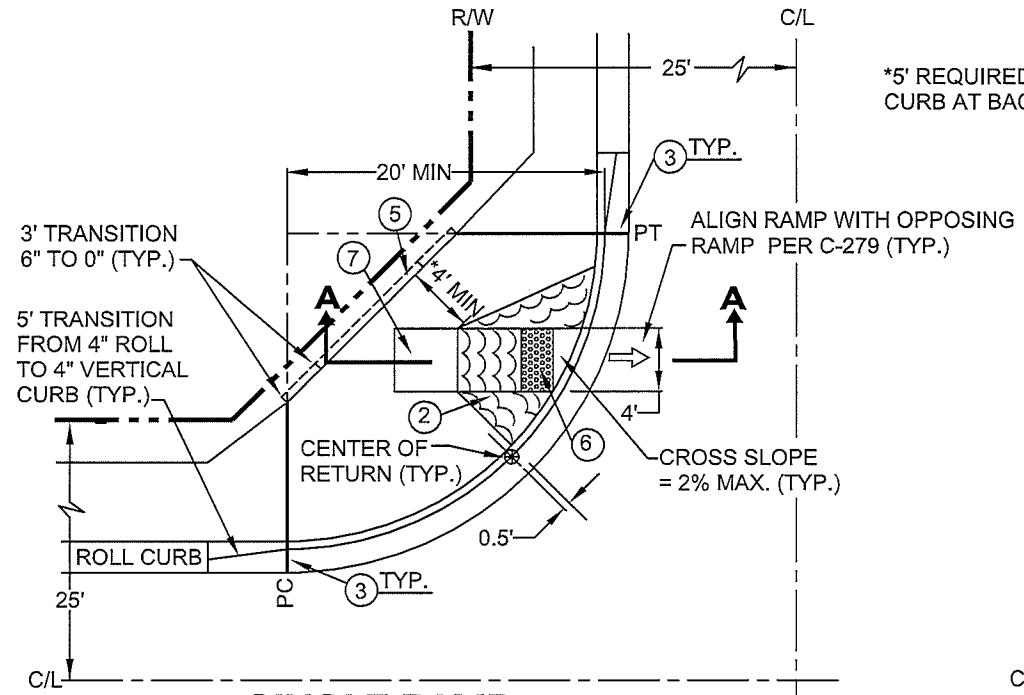

SINGLE RAMP

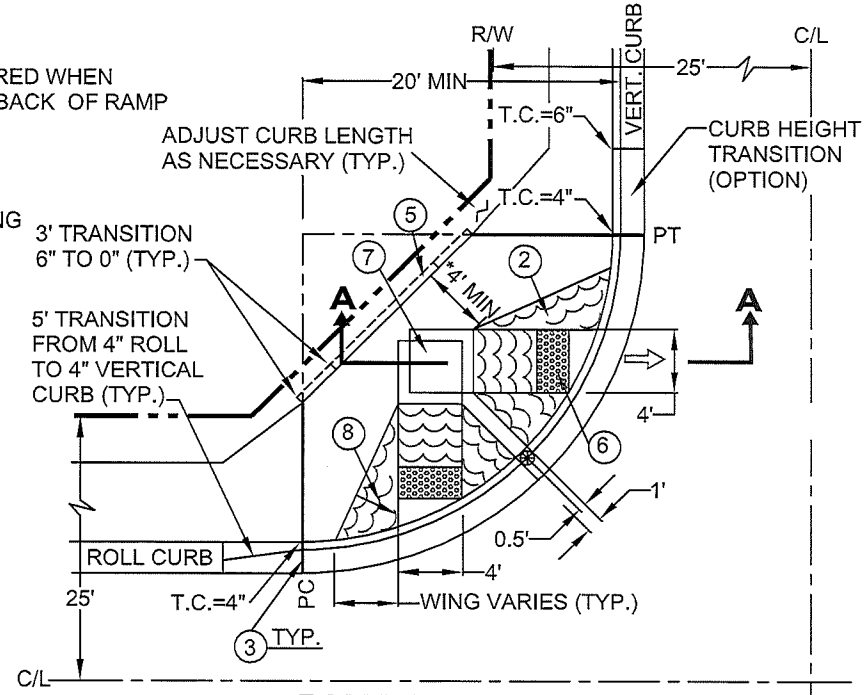

DUAL RAMP

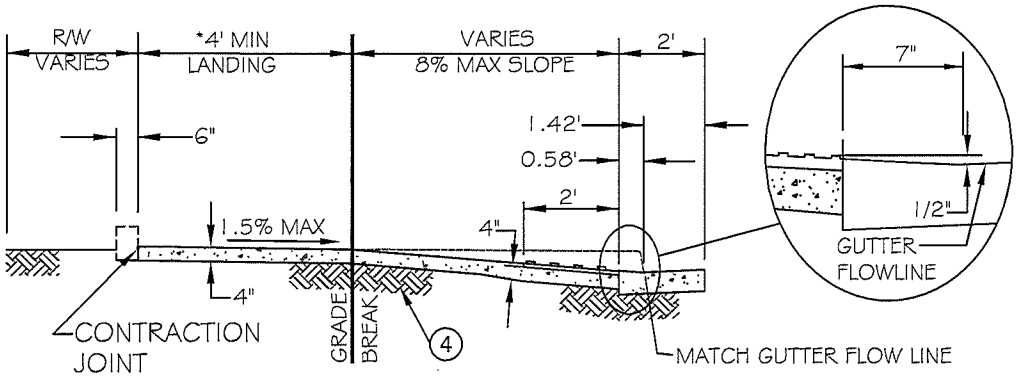

SECTION A-A

NOTES

1. CLASS "B" CONCRETE PER MAG SECTION 725.
2. LIMITS OF HEAVY ROUGH BROOM FINISH (TYP.)
3. EXPANSION JOINTS PER MAG SECTION 340.
4. SUBGRADE PREPARATION PER MAG SECTION 301.
5. OPTIONAL 6" CURB WITH 3' MIN. TRANSITION AS SHOWN, UNLESS OTHERWISE DIRECTED.
6. 2'x4' DETECTABLE WARNING PER APPROVED PRODUCTS LIST.
7. MUST MAINTAIN A 4'x4' LANDING PAD (TYP.)
8. 10% MAXIMUM WING SLOPE, ADJUST WING LENGTH AS NECESSARY (TYP.)

DETAIL NO. C-258 PAGE 3 OF 3	CITY OF CHANDLER STANDARD DETAIL	DIRECTIONAL CURB RAMP LOCAL STREETS	APPROVED: CITY ENGINEER DATE: 07-09-2015	DETAIL NO. C-258 PAGE 3 OF 3

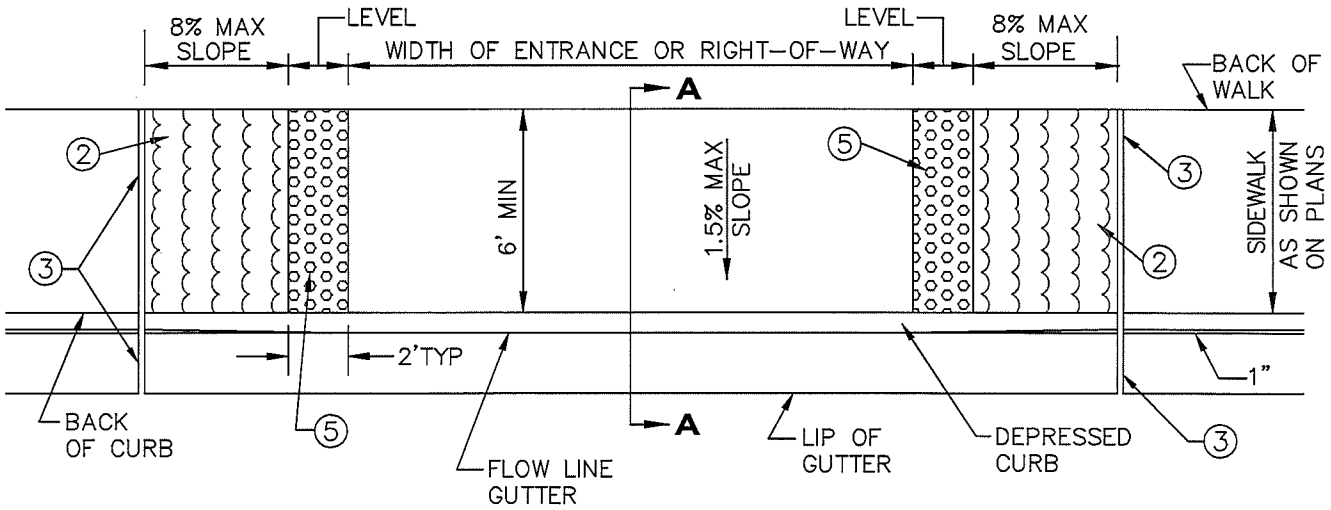

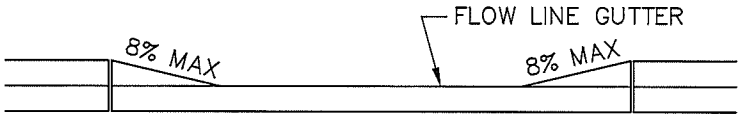

ELEVATION

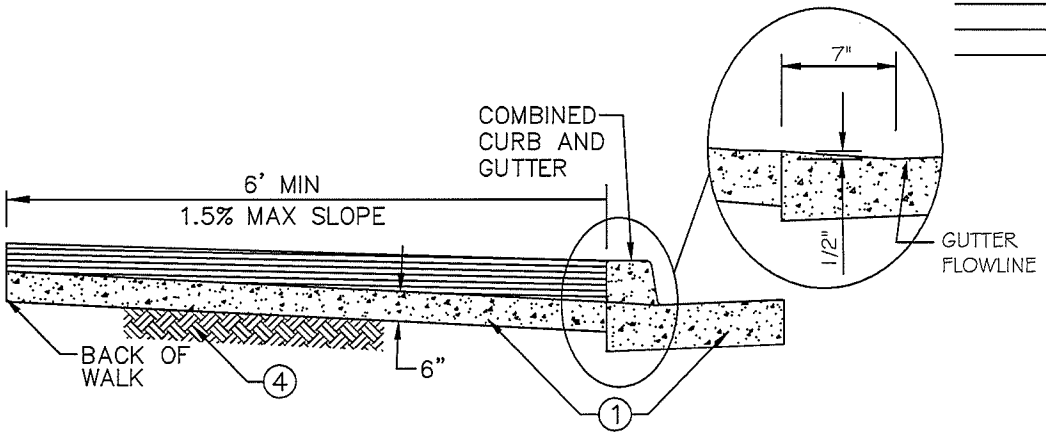

SECTION A-A

NOTES:

1. CLASS "B" CONCRETE PER MAG SECTION 725.
2. LIMITS OF HEAVY ROUGH BROOM FINISH.
3. EXPANSION JOINTS PER MAG 340.
4. SUBGRADE PREPARATION PER MAG SECTION 301.
5. DETECTABLE WARNING PER APPROVED PRODUCTS LIST.

DETAIL NO.					DETAIL NO.
C-259	CITY OF CHANDLER STANDARD DETAIL	**MODIFIED ENTRANCE**	APPROVED: CITY ENGINEER		**C-259**
NTS			DATE: 07-09-2015		NTS

PARALLEL PARKING OPTION

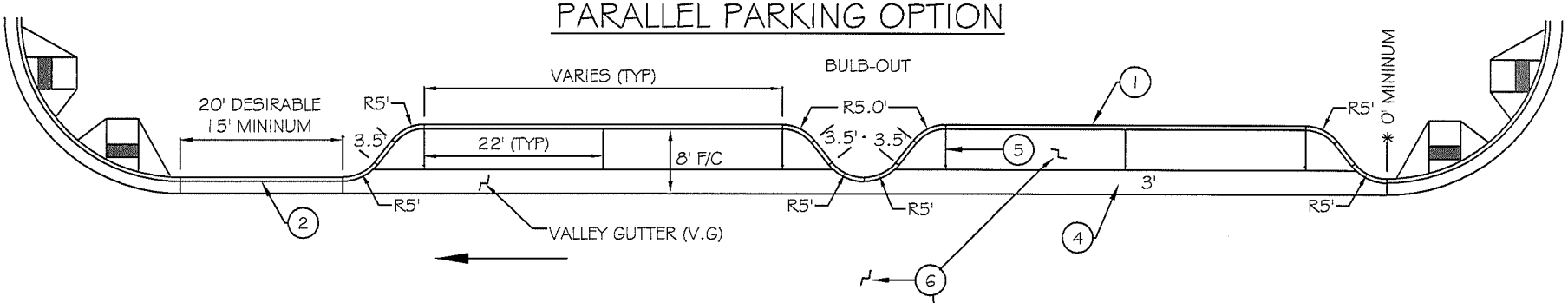

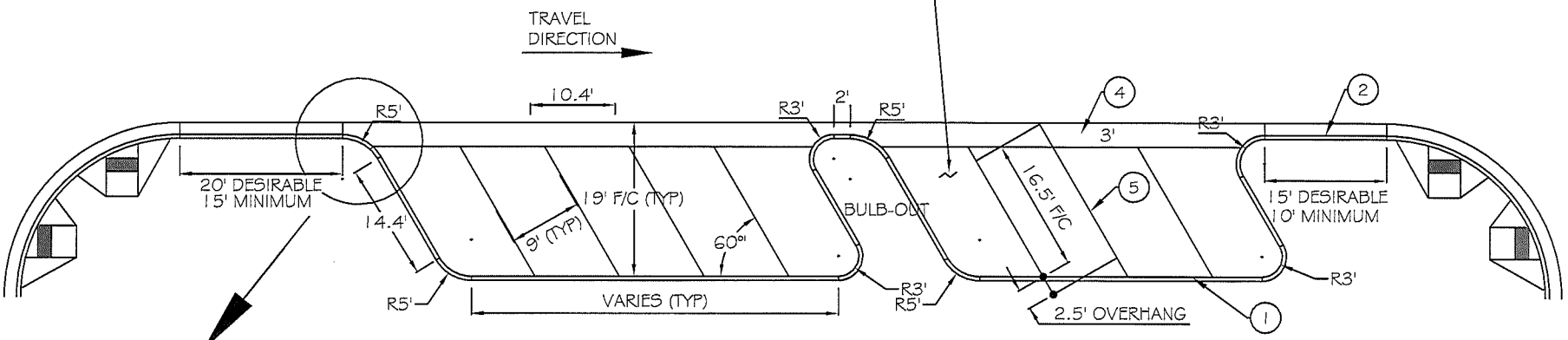

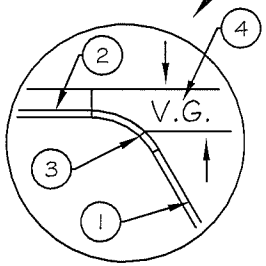

TYPICAL

ANGLE PARKING OPTION

ALL DIMENSIONS SHOW ARE TO BACK-OF-CURB, UNLESS OTHERWISE NOTED

NOTES:

1. 6" SINGLE CURB PER MAG STD DTL 222, TYPE 'A'.
2. 6" VERTICAL CURB AND GUTTER PER MAG STD DTL 220-1, TYPE A.
3. TRANSITION POINT FROM SINGLE CURB TO VERTICAL CURB AND GUTTER.
4. VALLEY GUTTER SHALL BE CLASS "B" PER MAG SEC 725 AND INSTALLED PER MAG SEC 505. BRUSH AND TROWEL PER C-215.
5. 4" SOLID WHITE LINE. MARKING IN CONCRETE VALLEY GUTTER NOT NECESSARY.
6. SEE ON-STREET PARKING TYPICAL CROSS SECTION, C-215, FOR FURTHER REQUIREMENTS.
7. SEE CITY TDM# 4, SECTION 5, FOR FURTHER REQUIREMENTS.

DETAIL NO. C-260 PAGE 1 OF 2	CITY OF CHANDLER STANDARD DETAIL	**ON-STREET PARKING USING BULB-OUTS**	APPROVED: CITY ENGINEER DATE: 07-09-2015	DETAIL NO. C-260 PAGE 1 OF 2

GRADES WITHIN PARKING AISLE AND SPACES SHALL NOT EXCEED 2% IN ANY DIRECTION, INCLUDING VALLEY GUTTER.

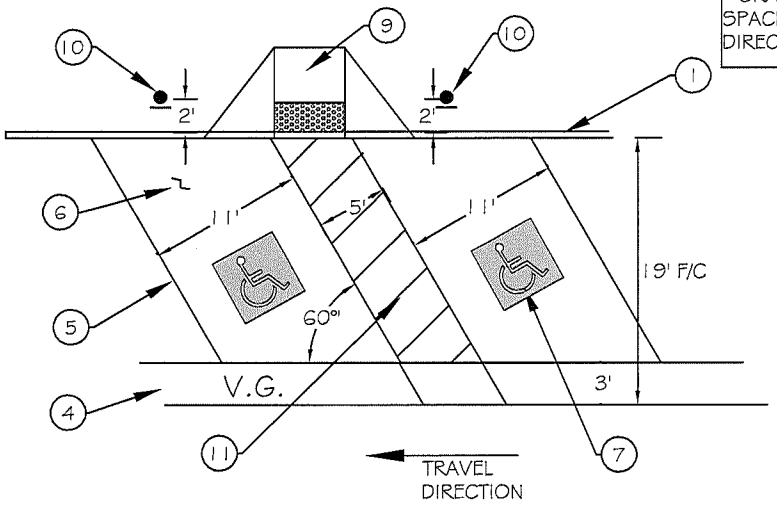

ACCESSIBLE ANGLE PARKING

*ACCESS AISLE REQUIRED WHEN MINIMUM 14' SIDEWALK IS AVAILABLE (TYP)

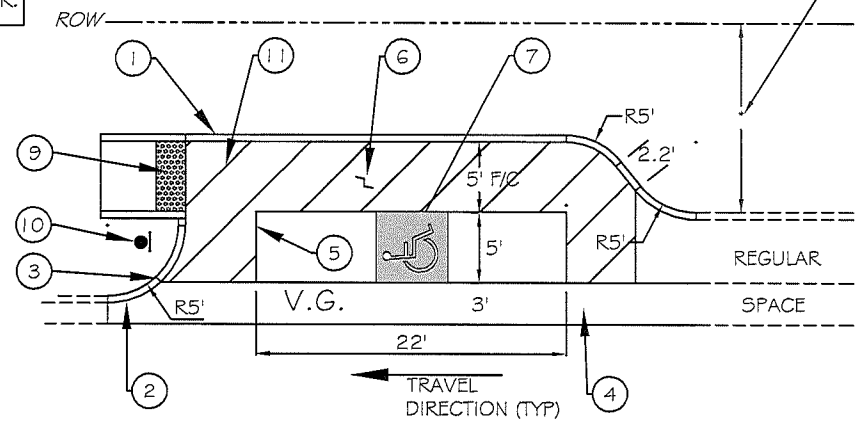

ACCESSIBLE PARALLEL PARKING

(END OF BLOCK)

REQUIRED ONLY IN SPECIFIC SITUATIONS. SEE TDM #4, SECTION 5.7.

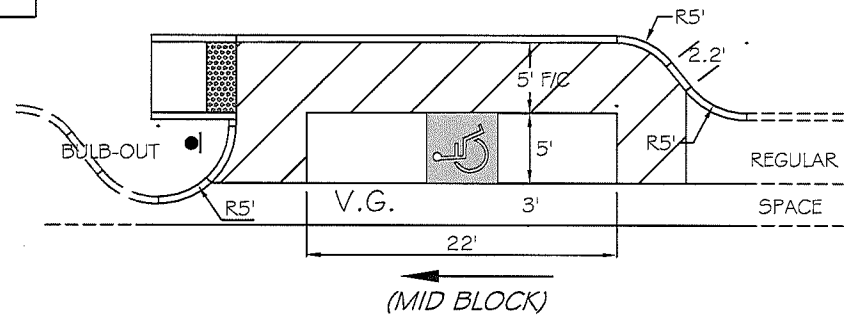

(MID BLOCK)

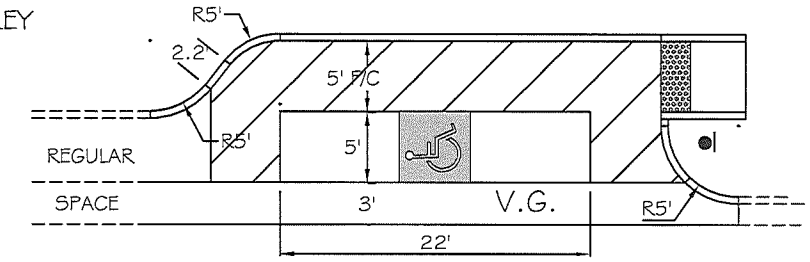

(START OF BLOCK)

NOTES:

1. 6" SINGLE CURB PER MAG STD DTL 222, TYPE 'A'.
2. 6" VERTICAL CURB AND GUTTER PER MAG STD DTL 220-1, TYPE A.
3. TRANSITION POINT FROM SINGLE CURB TO VERTICAL CURB AND GUTTER.
4. VALLEY GUTTER SHALL BE CLASS "B" PER MAG SEC 725 AND INSTALLED PER MAG SEC 505. BRUSH AND TROWEL PER C-215.
5. 4" SOLID WHITE LINE. MARKING IN CONCRETE GUTTER NOT NECESSARY.
6. SEE ON-STREET PARKING TYPICAL CROSS SECTION, C-215, FOR FURTHER REQUIREMENTS.
7. ACCESSIBLE PARKING SYMBOL PER C-612. DO NOT MARK IN CONCRETE VALLEY GUTTER.
8. IN-LINE RAMP PER C-257. COMPLY WITH RAMP GRADES AND LANDING REQUIREMENTS.
9. PERPENDICULAR RAMP PER C-258, PG 1. COMPLY WITH RAMP GRADES AND LANDING REQUIREMENTS.
10. ACCESSIBLE PARKING SIGN PER C-611.
11. 5' WIDE ACCESS AISLE MARKED WITH 4" SOLID WHITE LINES, 3' ON CENTER.

DETAIL NO. C-260 PAGE 2 OF 2	CITY OF CHANDLER STANDARD DETAIL	**ON-STREET PARKING ACCESSIBLE SPACES**	APPROVED: CITY ENGINEER DATE: 07-09-2015	DETAIL NO. C-260 PAGE 2 OF 2