WASTEWATER
C-400 TO C-417

TYPE 'A'

CAST-IRON

TYPE 'B'

CORROSION-PROTECTIVE COMPOSITE

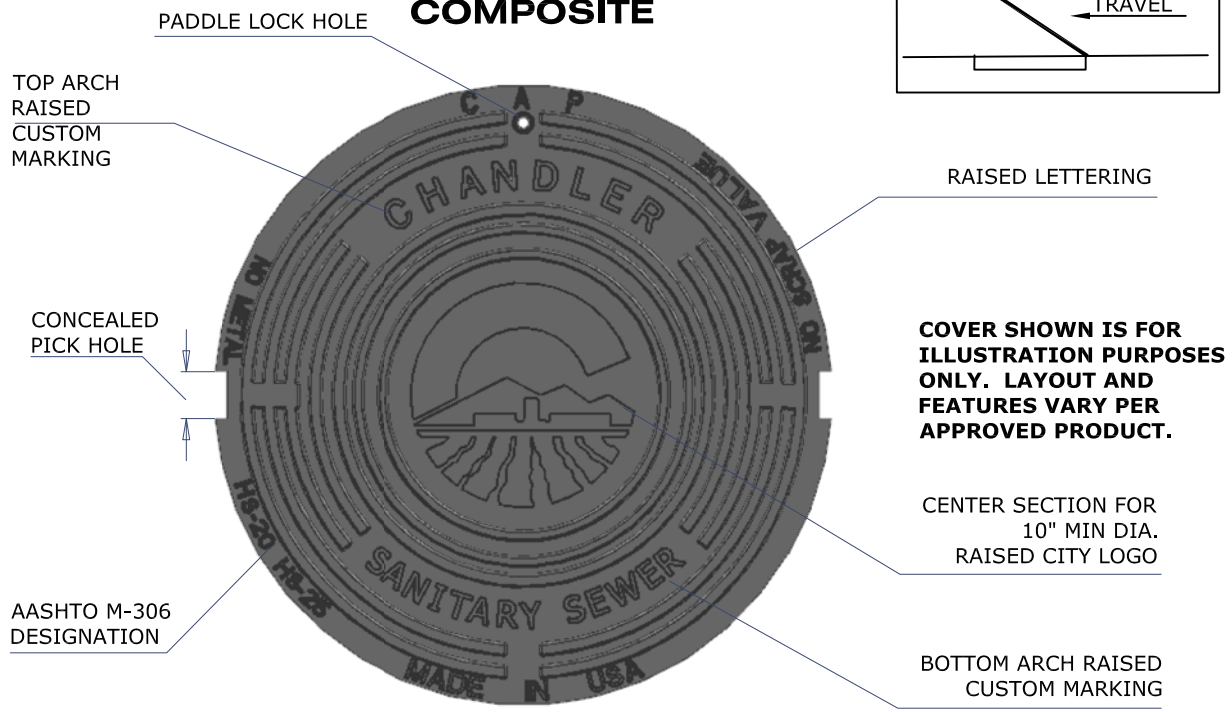

HINGED FRAME AND COVERS SHALL BE ADJUSTED SO THAT COVER OPENS AS SHOWN BELOW.

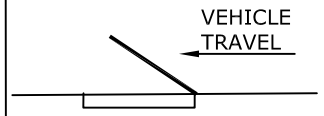

COVER SHOWN IS FOR ILLUSTRATION PURPOSES ONLY. LAYOUT AND FEATURES VARY PER APPROVED PRODUCT.

NOTE:

1. FRAME AND COVER SHALL CONFORM TO MAG STD DTL 423 & 424 FOR TYPE 'A' OR CITY LIST OF APPROVED PRODUCTS FOR TYPE 'B' .
2. DELETE BEADS ON MAG STD. DTL WHICH CONFLICT WITH LOGO SHOWN.
3. LETTERING ON MANHOLE COVER SHALL CONTAIN UTILITY FOR WHICH MANHOLE IS NEEDED, ("CHANDLER SANITARY SEWER" OR, "CHANDLER STORM SEWER"), OR AS DIRECTED.
4. THE TOTAL WIDTH OF INDIVIDUAL LETTERS SHALL BE SUCH THAT LETTERS AND WORDS ARE EQUALLY SPACED AND SHALL BE BALANCED TO FORM A COMPLETE CIRCLE WITH SPACES BEFORE AND AFTER THE WORD.
5. LETTERS SHALL BE 1 1/2" MIN IN HEIGHT AND RAISED 1/8" ABOVE LEVEL OF COVER.
6. TYPE OF LETTERS SHALL BE SUBMITTED FOR APPROVAL.

DETAIL NO.					
C-400	CITY OF CHANDLER STANDARD DETAIL	**MANHOLE FRAME AND COVER TYPES**	APPROVED: CITY ENGINEER DATE: 01-09-2020	DETAIL NO. **C-400**

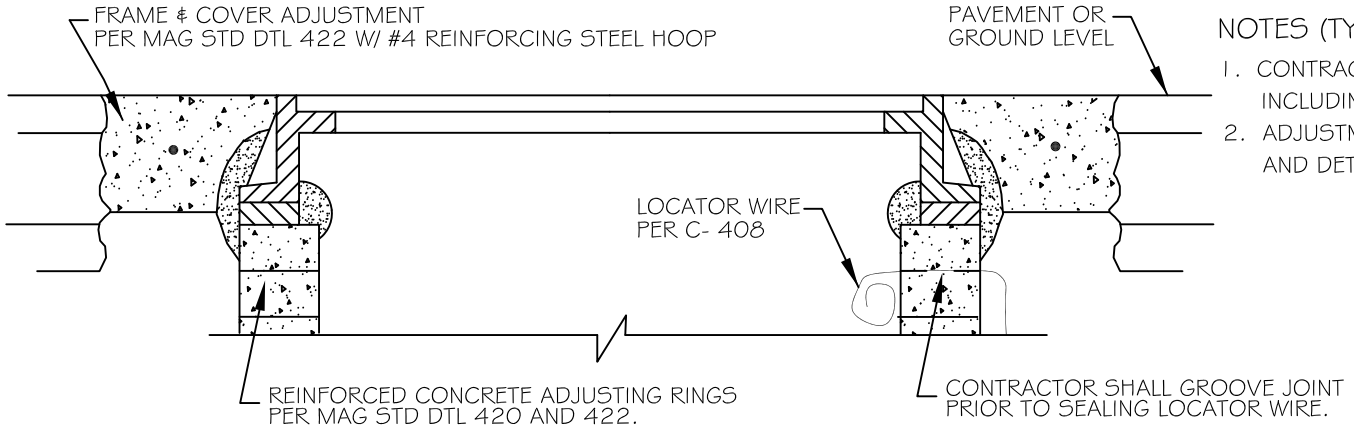

TYPE 'A'
CONCRETE RINGS

NOTES (TYPE 'A'):

1. CONTRACTOR SHALL ADJUST ALL MANHOLE FRAME AND COVERS, INCLUDING MANHOLES OUTSIDE OF PAVEMENT.
2. ADJUSTMENT SHALL BE IN ACCORDANCE WITH MAG SECTION 345 AND DETAILS 420 AND 422.

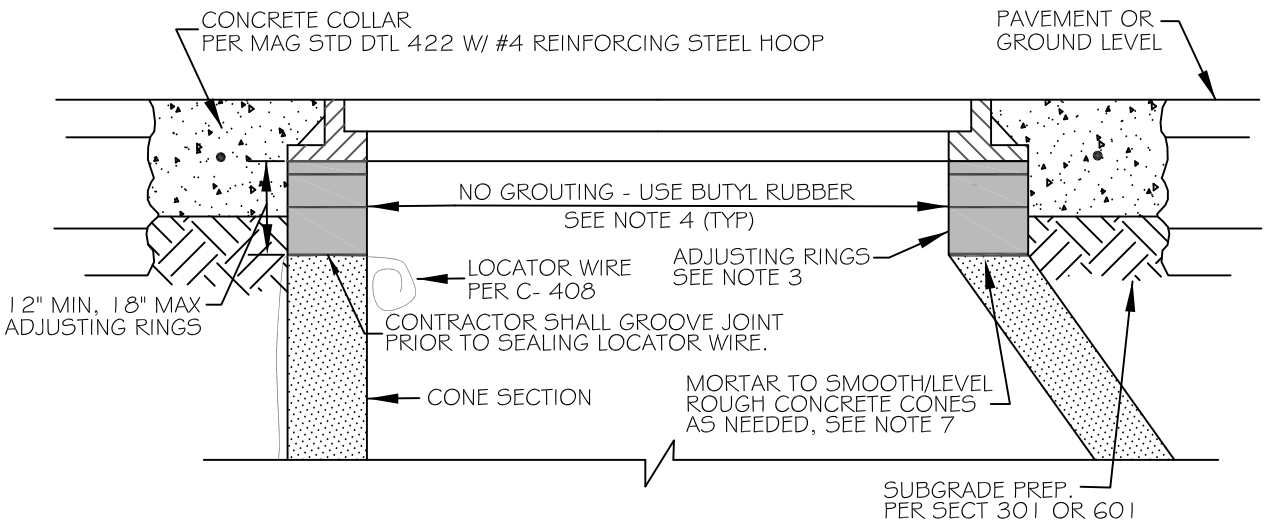

TYPE 'B'
CORROSION-PROTECTIVE RINGS

NOTES (TYPE 'B'):

1. CONTRACTOR SHALL ADJUST ALL MANHOLE FRAME AND COVERS, INCLUDING MANHOLES OUTSIDE OF PAVEMENT.
2. ADJUSTMENT SHALL BE IN ACCORDANCE WITH MAG SECTION 345 AND CITY SUPPLEMENTS.
3. ADJUSTMENT RINGS PER CITY LIST OF APPROVED PRODUCTS. USE ONLY APPROVED FLAT OR SLOPED SPACER RINGS AS REQUIRED. NO OTHER SPACERS OF ANY KIND ALLOWED INCLUDING GROUT, ROCKS, STICKS, WOOD SHIMS, BRICK ETC.
4. INSTALLATION SHALL BE IN ACCORDANCE WITH MANUFACTURER'S RECOMMENDATION WITH A $\frac{3}{8}$" DIAM. (OR $\frac{1}{2}$" SQ) BUTYL RUBBER MASTIC ROPE (OR APPROVED EQUAL) INSTALLED BETWEEN EACH OF THE RINGS, THE CONE AND THE BOTTOM RING, AND FRAME & COVER AND TOP RING.
5. ADJUSTMENT RING PRODUCTS SHALL NOT BE MIXED IN SAME MH.
6. CARE SHALL BE TAKEN TO ENSURE NO SHIFTING OF RINGS, AND FRAME & COVER OCCURS WITH BACKFILLING.
7. CORROSION PROTECTIVE COATING PER CITY LIST OF APPROVED PRODUCTS SHALL BE APPLIED TO ALL EXPOSED MORTAR AS REQUIRED PER TDM 1 & 2.

HINGED FRAME AND COVERS SHALL BE ADJUSTED SO THAT COVER OPENS AS SHOWN.

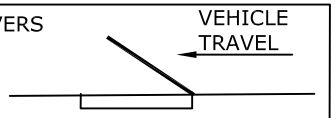

DETAIL NO.					DETAIL NO.
C-401	CITY OF CHANDLER STANDARD DETAIL	**MANHOLE CONCRETE COLLAR AND ADJUSTMENT TYPES**	APPROVED: CITY ENGINEER		**C-401**
NTS			DATE: 01-09-2020		NTS

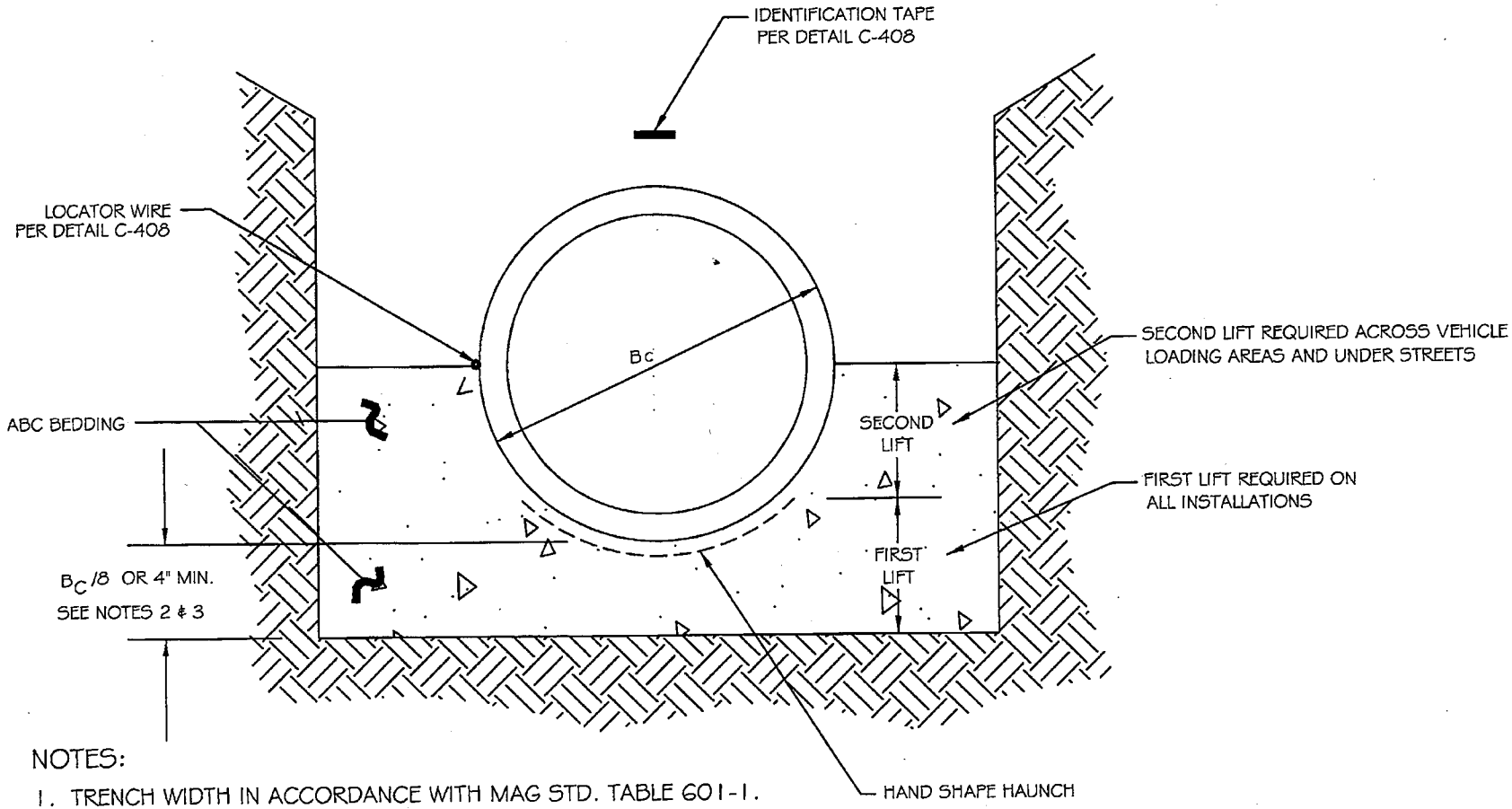

NOTES:

1. TRENCH WIDTH IN ACCORDANCE WITH MAG STD. TABLE 601-1.
2. MINIMUM 4" FOR PIPES 12" OR SMALLER.
3. MINIMUM 6" FOR PIPES LARGER THAN 12".
4. SEWER PIPE SHALL BE EXTRA-STRENGTH VITRIFIED CLAY PIPE PER MAG SPEC 743. PVC PER MAG SPEC 745 IS PERMITTED AT DEPTHS OF COVER LESS THAN 10'. SOILS INVESTIGATION, TRENCH DETAIL, STRUCTURAL ANALYSIS, AND CITY ENGINEER'S APPROVAL IS REQUIRED FOR PERMITTING PVC PIPE AT GREATER THAN 10' COVER.

DETAIL NO.					DETAIL NO.
C-402	CITY OF CHANDLER STANDARD DETAIL	**SEWER PIPE BEDDING DETAIL**	APPROVED: CITY ENGINEER		**C-402**
NTS			DATE: 01/06/09		NTS

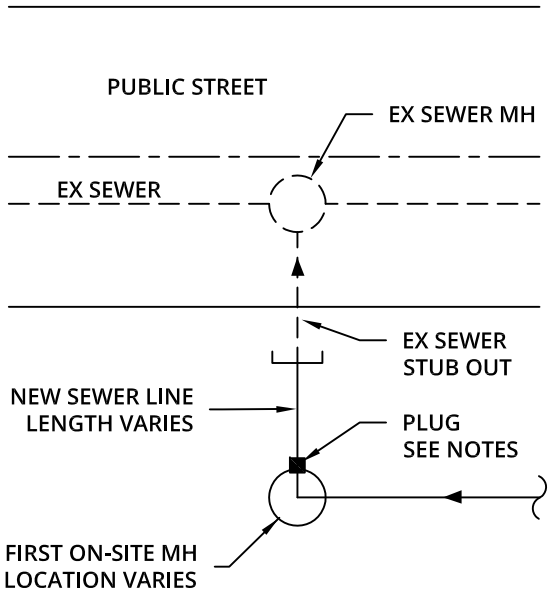

STUB OUT (OR PHASED) CONNECTION

1. NEW SEWER AND STUB OUT LINE TO THE EXISTING MANHOLE SHALL BE VACTORED AFTER CONNECTIONS ARE COMPLETE AND PLUG SHALL BE IMMEDIATELY INSTALLED.
2. PLUG MAY ONLY BE REMOVED AFTER PASSING ALL REQUIRED TESTING (PRESSURE, MANDREL AND CCTV), AND WITH APPROVAL OF THE CITY INSPECTOR.
3. LINES SHALL BE VACTORED PRIOR TO REQUESTING CCTV INSPECTION, AND WITH CITY INSPECTOR PRESENT, A SUFFICIENT VOLUME OF WATER SHALL BE ADDED TO THE SYSTEM FOR CCTV INSPECTION.
4. PLUG SHALL BE IMMEDIATELY REINSTALLED AFTER COMPLETION OF CCTV INSPECTION OR DAILY IF INSPECTION SPANS MULTIPLE DAYS.

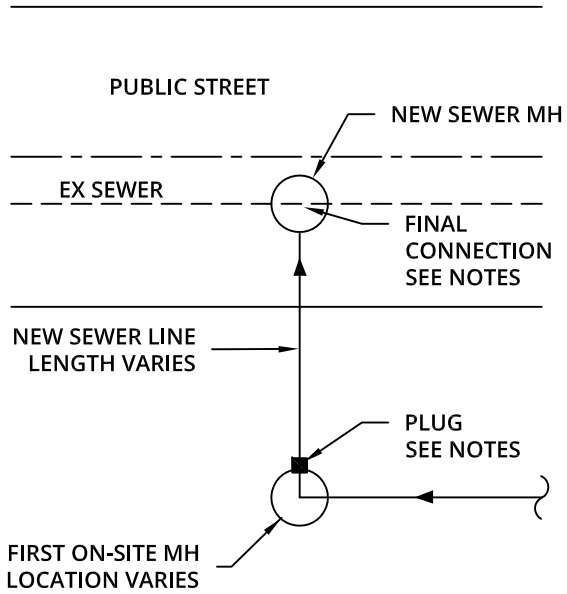

NEW MH (IN PUBLIC STREET) CONNECTION

1. NEW SEWER LINE TO THE NEW MANHOLE SHALL BE VACTORED AFTER CONNECTIONS ARE COMPLETE AND PLUG SHALL BE IMMEDIATELY INSTALLED.

< SAME NOTES (2-4) APPLY

5. FINAL CONNECTION IN NEW MANHOLE SHALL OCCUR NEAR PROJECT COMPLETION AND EXISTING SEWER LINE WITHIN MANHOLE REMAINS FULLY INTACT. WHEN ALL TESTING HAS BEEN COMPLETED AND ACCEPTED BY THE CITY, TOP HALF OF PIPE IS REMOVED AND CHANNEL(S) ARE TO BE FORMED. SEE DETAIL A.

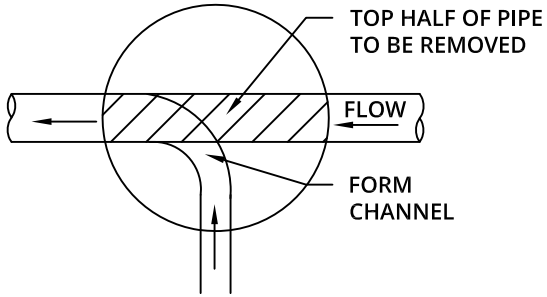

DETAIL A

GENERAL NOTES:

1. PLUGS SHALL BE INSTALLED AS SHOWN TO PROTECT THE CITY SANITARY SYSTEM.
2. PLUGS SHALL REMAIN IN PLACE UNTIL ALL TESTING HAS BEEN COMPLETED AND ACCEPTED BY THE CITY.
3. MECHANICAL OR PNEUMATIC PLUGS MAY BE USED AND INSTALLED TO ACHIEVE A WATER TIGHT SEAL.
4. CCTV TESTING SHALL BE IN ACCORDANCE WITH MAG SECTION 611 AND CITY PROCESS.
5. ALL OTHER CONSTRUCTION AND TESTING TO BE IN ACCORDANCE WITH MAG AND CITY SUPPLEMENTS.
6. THE CONTRACTOR SHALL UNCOVER ALL EXISTING CITY UTILITY LINES BEING TIED INTO TO VERIFY THEIR TYPE, CONDITION, LOCATION, INVERT, SLOPE, AND ANY OTHER INFORMATION NEEDED TO DETERMINE THAT THE UTILITY CONNECTION WILL FUNCTION AS DESIGNED. THE CONTRACTOR IS RESPONSIBLE FOR MAKING ANY REPAIRS NECESSARY TO THE LATERAL OR MAIN LINES OF THE CITY SYSTEM NECESSARY FOR THE CONNECTION TO FUNCTION AS DESIGNED. THE CONTRACTOR SHALL LOCATE OR HAVE LOCATED ALL EXISTING UNDERGROUND PRIVATE UTILITIES (ELECTRIC, TELEPHONE, PIPELINES, ETC.) AND STRUCTURES IN ADVANCE OF CONSTRUCTION AND SHALL ELIMINATE ALL CONFLICTS PRIOR TO START OF CONSTRUCTION. BLUE STAKE TELEPHONE (602) 263-1100.

DETAIL NO.					DETAIL NO.
C-403	CITY OF CHANDLER STANDARD DETAIL	SEWER CONNECTIONS	APPROVED: CITY ENGINEER		C-403
NTS			DATE: 01-09-2020		NTS

RECLAIMED WATER SERVICE CONNECTIONS SIZING TABLE

SERVICE CONNECTION FLOW RATE (GPM)	IRRIGATION SERVICE LINE SIZE (AFTER PUMP)	RECLAIMED WATER SERVICE CONNECTION LINE SIZE (FROM MAIN TO PUMP)	WET WELL PUMP SEE PAGES:	CAN PUMP SEE PAGES:
UP TO 80	2"	4"	PAGE 3	-
80 TO 70	3"	4"	PAGE 4	-
170 TO 300	4"	6"	PAGES 5 & 6	PAGES 9 & 10
300 TO 700	6"	8"	PAGES 7 & 8	PAGES 11 & 12

NOTES:

1. THE DATA FORM ON DETAIL C-404 PAGE 2 MUST BE COMPLETED AND SUBMITTED WITH THE BUILDING PERMIT APPLICATION FOR THE INLINE PUMP AND CAN PUMP SERVICE CONNECTIONS.

2. THESE RECLAIMED WATER SERVICE CONNECTION DETAILS PRESENT THE MINIMUM REQUIREMENTS TO ENSURE THE INTEGRITY OF THE CITY OF CHANDLER'S RECLAIMED WATER DISTRIBUTION SYSTEM. ALL RECLAIMED WATER SERVICE CONNECTIONS MUST BE DESIGNED IN ACCORDANCE WITH THESE DETAILS AND THE SITE-SPECIFIC REQUIREMENTS INCLUDING: THE GROUND ELEVATION, IRRIGATION SYSTEM FLOW REQUIREMENTS, AND IRRIGATION SYSTEM PRESSURE REQUIREMENTS.

3. ALL RECLAIMED WATER SERVICE CONNECTIONS SHALL BE DESIGNED IN ACCORDANCE WITH MARICOPA COUNTY ENVIRONMENTAL SERVICES DEPARTMENT (MCESD) AND ARIZONA DEPARTMENT OF ENVIRONMENTAL QUALITY (ADEQ) REQUIREMENTS.

4. AN APPROVAL TO CONSTRUCT PERMIT FROM MCESD IS REQUIRED FOR ALL RECLAIMED WATER SERVICE CONNECTIONS PRIOR TO CONSTRUCTION. A COPY OF THE APPROVAL OF CONSTRUCTION FROM MCDES MUST BE SUBMITTED TO THE CITY OF CHANDLER PRIOR TO PLACING THE RECLAIMED WATER SERVICE CONNECTION IN SERVICE.

5. ALL ABOVE GROUND PIPING SHALL BE PAINTED PURPLE OR STENCILED IN ACCORDANCE WITH MARICOPA ASSOCIATION OF GOVERNMENTS (MAG) STANDARDS SECTION 616.4.2.

DEVELOPER: _____

TURNOUT ADDRESS: _____

FLOW RATE CRITERIA

ANNUAL AVERAGE _____ ACRE FT/YEAR

MAXIMUM MONTH _____ ACRE FT

INSTANTANEOUS _____ GPM

SUCTION HEAD CALCULATION

1. LENGTH AND DIAMETER OF PIPING FROM NEAREST RECLAIMED WATER TRANSMISSION MAIN (RWTM) TO TURNOUT _____

2. FRICTION LOSSES IN PIPING FROM RWTM TO TURNOUT AT INSTANTANEOUS FLOW RATE _____ FEET

3. HGL IN RWTM 1330 TO 1345 FEET

4. HGL AT TURNOUT (HGL OF RWTM LESS FRICTION LOSSES CALCULATED ABOVE) _____ TO _____ FEET

5. ELEVATION AT TURNOUT _____ FEET

6. SUCTION PRESSURE AT TURNOUT _____ TO _____ PSI

7. PUMP TDH _____ FEET

8. DISCHARGE PRESSURE _____ PSI

DETAIL NO. **C-404** PAGE 2 OF 14	CITY OF CHANDLER STANDARD DETAIL	**RECLAIMED WATER SERVICE CONNECTION DATA FORM**	APPROVED: _____ CITY ENGINEER DATE: June 12/08	DETAIL NO. **C-404** PAGE 2 OF 12

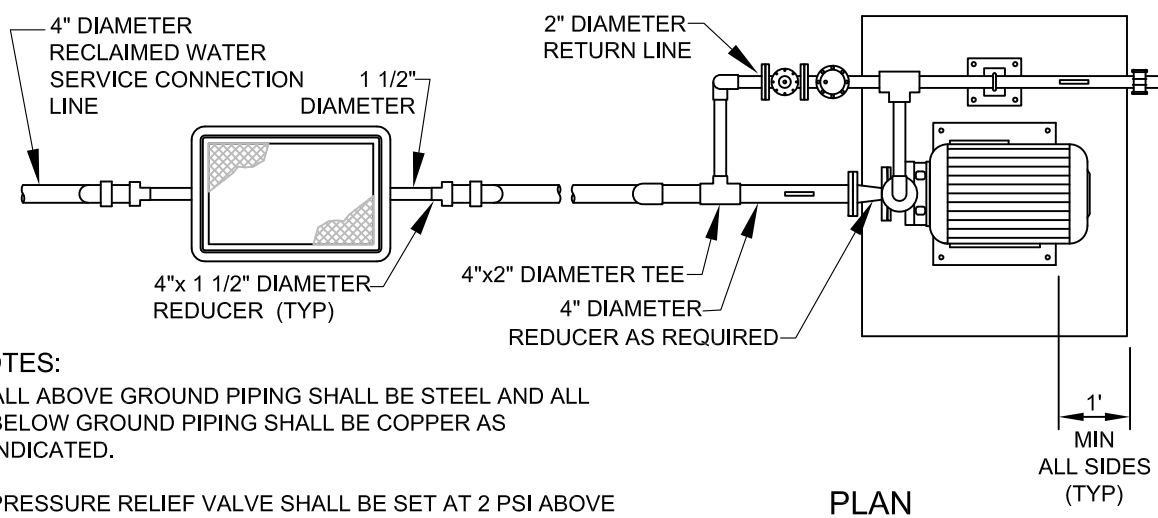

PLAN

1. PRESSURE RELIEF VALVE: CLA VAL MODEL 50-01 OR APPROVED EQUAL
2. SILENT CHECK VALVE: APCO SERIES 600 OR APPROVED EQUAL
3. MOTORIZED BUTTERFLY VALVE: WATTS MODEL BF-03 WITH ACTUATOR MODEL ER350 OR APPROVED EQUAL
4. SPLIT CASE CENTRIFUGAL PUMP
5. PUMP CONCRETE SUPPORT PAD
6. 1/2" THREADED OUTLET, BALL VALVE, SS DIAPHRAGM, AND ASHCROFT TYPE 1009 PRESSURE GAUGE (0-150 PSI) OR APPROVED EQUAL
7. PIPE SUPPORT: B-LINE FIGURE B3088T, B3089, AND B3090 OR APPROVED EQUAL
8. AIR RELEASE VALVE: APCO MODEL 50 WITH 1/2" THREADED INLET OR APPROVED EQUAL

NOTES:

1. ALL ABOVE GROUND PIPING SHALL BE STEEL AND ALL BELOW GROUND PIPING SHALL BE COPPER AS INDICATED.
2. PRESSURE RELIEF VALVE SHALL BE SET AT 2 PSI ABOVE SPRINKLER DESIGN PRESSURE.
3. DEVELOPER SHALL PROVIDE UTILITY SERVICES TO THE FACILITY AS REQUIRED.
4. DEVELOPER MAY USE VARIABLE FREQUENCY DRIVE WITH PUMP IN LIEU OF RETURN LINE.
5. DEVELOPER SHALL INTERLOCK MOTORIZED BUTTERFLY VALVE TO OPEN/CLOSE ON PUMP START/STOP.

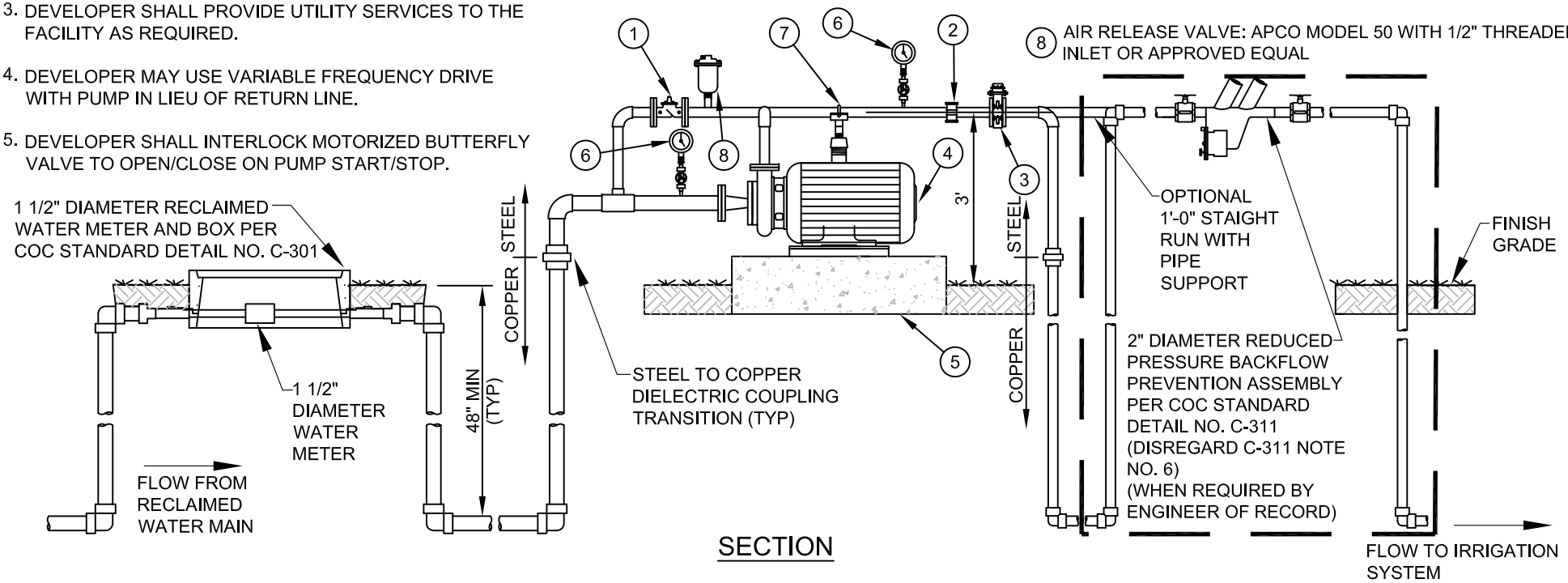

SECTION

DETAIL NO. C-404 PAGE 3 OF 12	CITY OF CHANDLER STANDARD DETAIL	**2" RECLAIMED WATER IRRIGATION SERVICE LINE INLINE PUMP TYPE**	APPROVED: CITY ENGINEER DATE: 01-09-2020	DETAIL NO. C-404 PAGE 3 OF 12

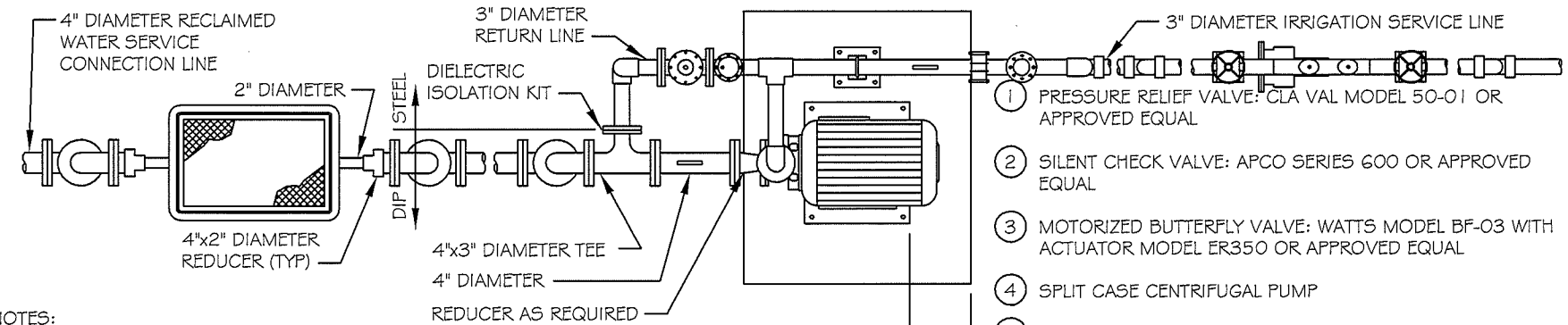

PLAN

1. PRESSURE RELIEF VALVE: CLA VAL MODEL 50-01 OR APPROVED EQUAL
2. SILENT CHECK VALVE: APCO SERIES 600 OR APPROVED EQUAL
3. MOTORIZED BUTTERFLY VALVE: WATTS MODEL BF-03 WITH ACTUATOR MODEL ER350 OR APPROVED EQUAL
4. SPLIT CASE CENTRIFUGAL PUMP
5. PUMP CONCRETE SUPPORT PAD
6. 1/2" THREADED OUTLET, BALL VALVE, SS DIAPHRAGM, AND ASHCROFT TYPE 1009 PRESSURE GAUGE (0-150 PSI) OR APPROVED EQUAL
7. PIPE SUPPORT: B-LINE FIGURE B3088T, B3089, AND B3090 OR APPROVED EQUAL
8. AIR RELEASE VALVE: APCO MODEL 50 WITH 1/2" THREADED INLET OR APPROVED EQUAL

NOTES:

1. ALL ABOVE GROUND PIPING SHALL BE STEEL AND ALL BELOW GROUND PIPING SHALL BE COPPER OR DIP AS INDICATED.
2. PRESSURE RELIEF VALVE SHALL BE SET AT 2 PSI ABOVE SPRINKLER DESIGN PRESSURE.
3. DEVELOPER SHALL PROVIDE UTILITY POWER TO THE FACILITY AS REQUIRED.
4. DEVELOPER MAY USE VARIABLE FREQUENCY DRIVE WITH PUMP IN LIEU OF RETURN LINE.
5. DEVELOPER SHALL INTERLOCK MOTORIZED BUTTERFLY VALVE TO OPEN/CLOSE ON PUMP START/STOP.

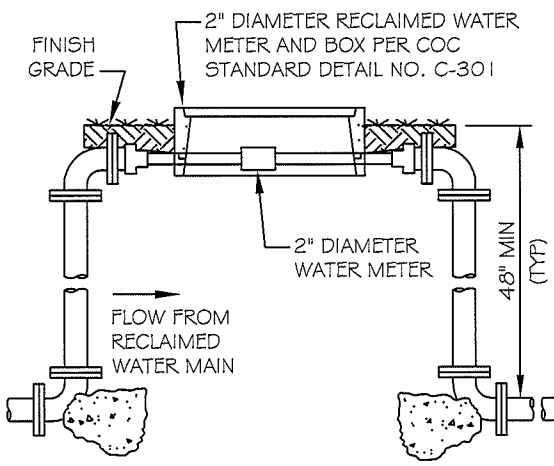

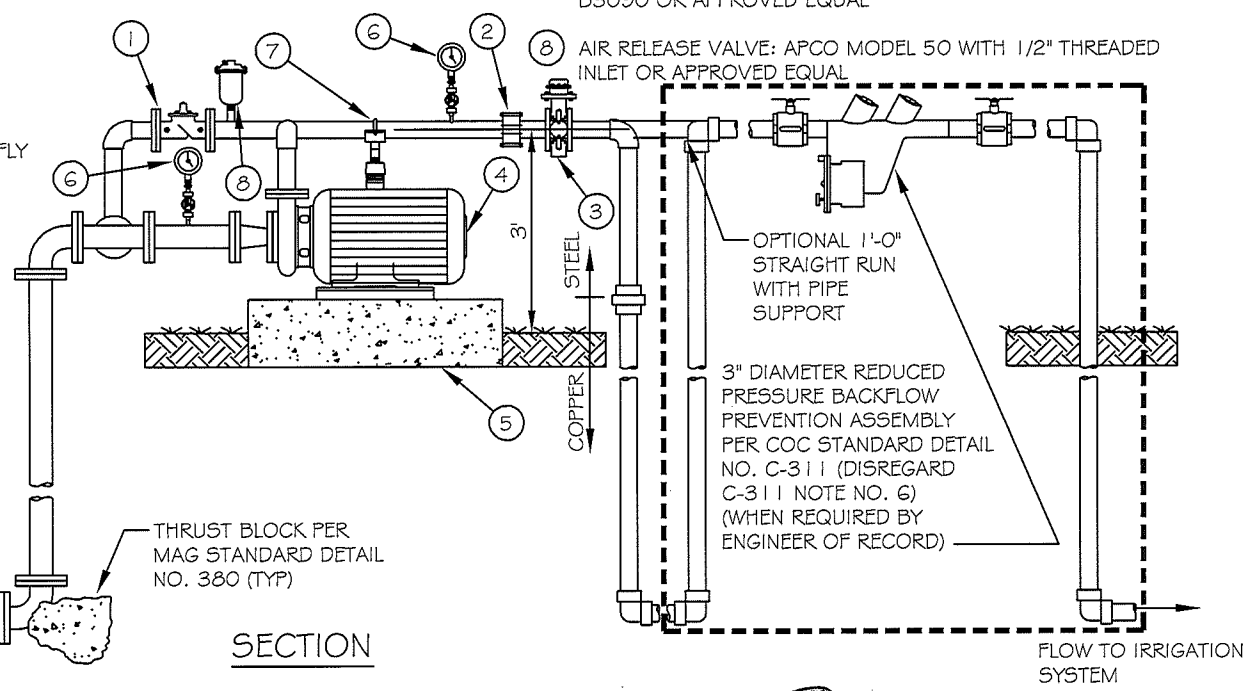

SECTION

DETAIL NO. C-404 PAGE 4 OF 12	CITY OF CHANDLER STANDARD DETAIL	**3" RECLAIMED WATER IRRIGATION SERVICE LINE INLINE PUMP TYPE**	APPROVED: CITY ENGINEER DATE: 1-9-14	DETAIL NO. C-404 PAGE 4 OF 12

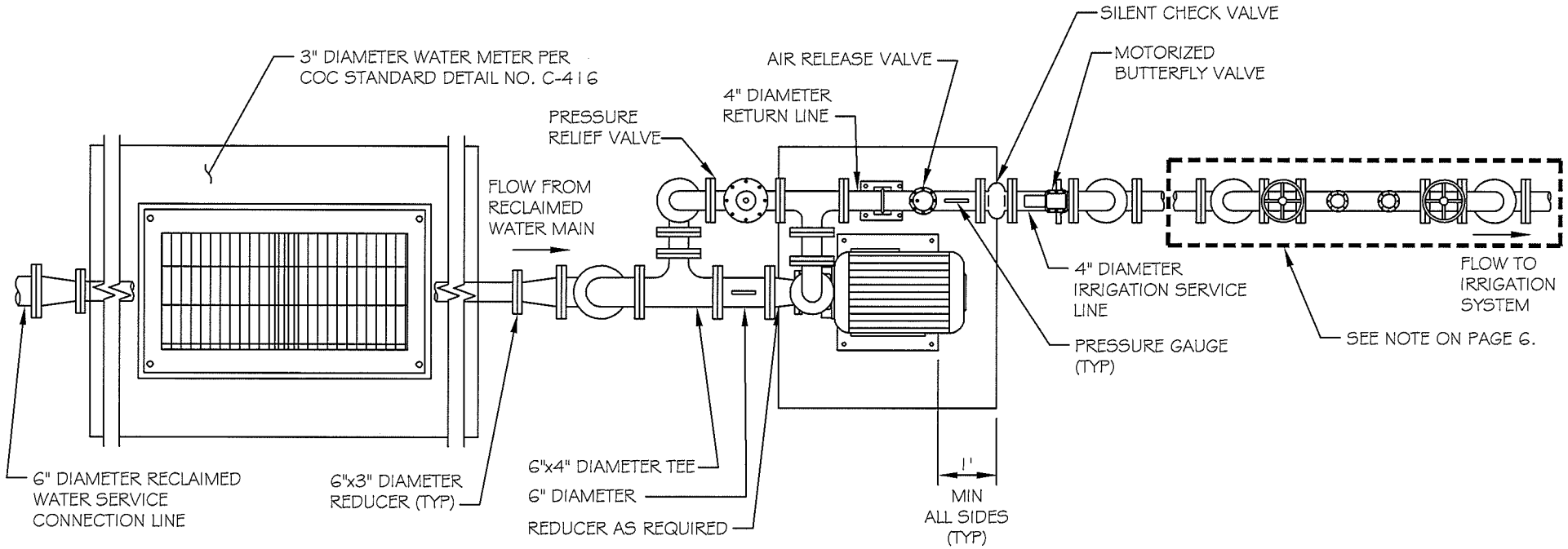

PLAN

NOTES:

1. ALL PIPING SHALL BE DUCTILE IRON (DIP) AS SHOWN.
2. PRESSURE RELIEF VALVE SHALL BE SET AT 2 PSI ABOVE SPRINKLER DESIGN PRESSURE.
3. DEVELOPER SHALL PROVIDE UTILITY SERVICES TO THE FACILITY AS REQUIRED.
4. DEVELOPER MAY USE VARIABLE FREQUENCY DRIVE WITH PUMP IN LIEU OF RETURN LINE.
5. DEVELOPER SHALL INTERLOCK MOTORIZED BUTTERFLY VALVE TO OPEN/CLOSE ON PUMP START/STOP.

DETAIL NO. C-404 PAGE 5 OF 12	CITY OF CHANDLER STANDARD DETAIL	**4" RECLAIMED WATER IRRIGATION SERVICE LINE INLINE PUMP TYPE**	APPROVED: CITY ENGINEER DATE: 1-9-14	DETAIL NO. C-404 PAGE 5 OF 12

1. PRESSURE RELIEF VALVE: CLA VAL MODEL 50-01 OR APPROVED EQUAL
2. SILENT CHECK VALVE: APCO SERIES 600 OR APPROVED EQUAL
3. MOTORIZED BUTTERFLY VALVE: MUELLER LINE SEAL III OR APPROVED EQUAL
4. SPLIT CASE CENTRIFUGAL PUMP
5. PUMP CONCRETE SUPPORT PAD
6. 1/2" THREADED OUTLET, BALL VALVE, SS DIAPHRAGM, AND ASHCROFT TYPE 1009 PRESSURE GAUGE (0-150 PSI) OR APPROVED EQUAL
7. PIPE SUPPORT: B-LINE FIGURE B3088T, B3089, AND B3090 OR APPROVED EQUAL
8. AIR RELEASE VALVE: APCO MODEL 50 WITH 1" THREADED INLET OR APPROVED EQUAL

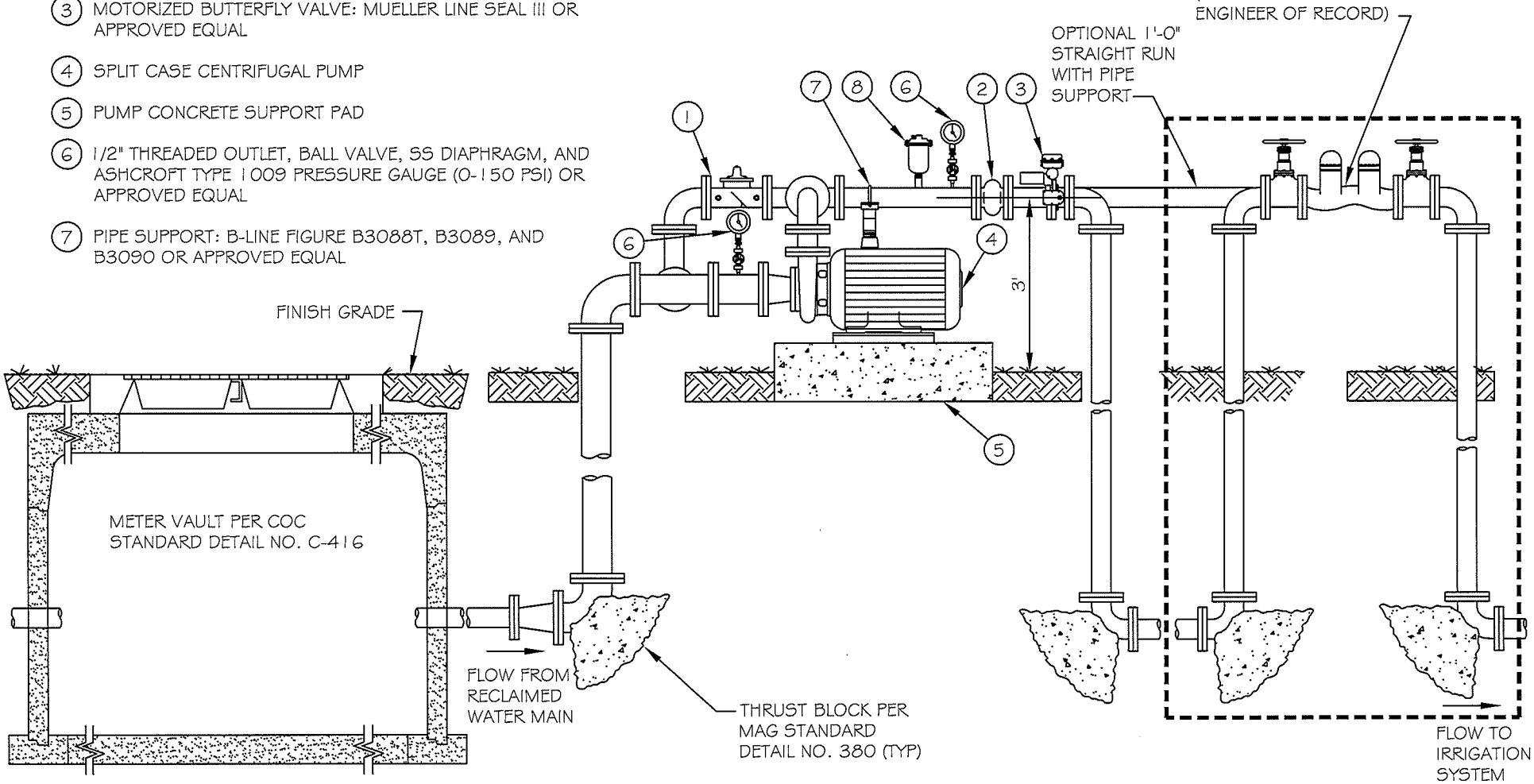

SECTION

DETAIL NO. C-404 PAGE 6 OF 12	CITY OF CHANDLER STANDARD DETAIL	**4" RECLAIMED WATER IRRIGATION SERVICE LINE INLINE PUMP TYPE**	APPROVED: CITY ENGINEER DATE: 1-9-14	DETAIL NO. C-404 PAGE 6 OF 12

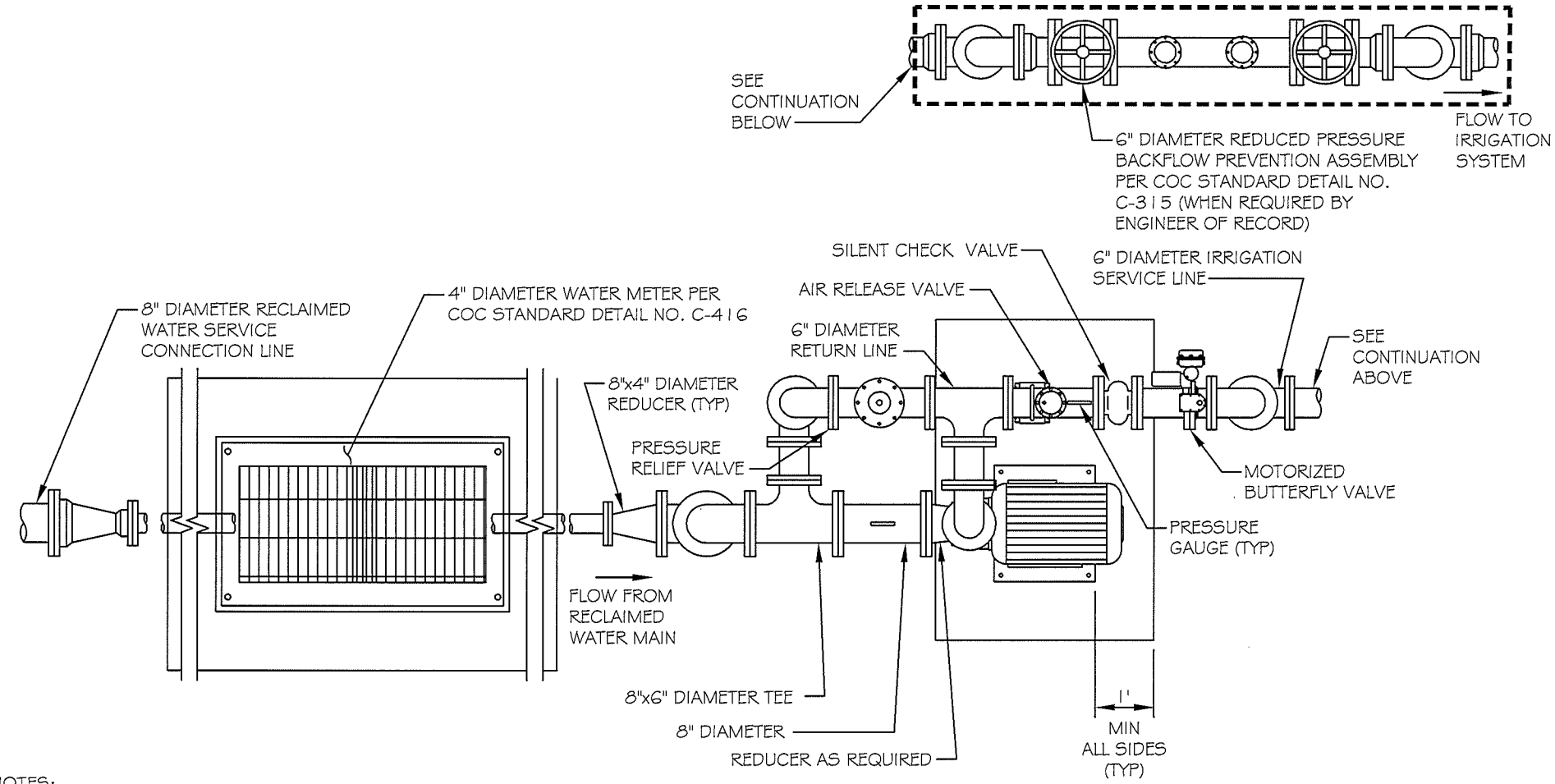

PLAN

NOTES:

1. ALL PIPING SHALL BE DUCTILE IRON (DIP) AS SHOWN.
2. PRESSURE RELIEF VALVE SHALL BE SET AT 2 PSI ABOVE SPRINKLER DESIGN PRESSURE.
3. DEVELOPER SHALL PROVIDE UTILITY SERVICES TO FACILITY AS REQUIRED.
4. DEVELOPER MAY USE VARIABLE FREQUENCY DRIVE WITH PUMP IN LIEU OF RETURN LINE.
5. DEVELOPER SHALL INTERLOCK MOTORIZED BUTTERFLY VALVE TO OPEN/CLOSE ON PUMP START/STOP.

DETAIL NO.					DETAIL NO.
C-404	CITY OF CHANDLER STANDARD DETAIL	**6" RECLAIMED WATER IRRIGATION SERVICE LINE INLINE PUMP TYPE**	APPROVED: CITY ENGINEER		**C-404**
PAGE 7 OF 12			DATE: 1-9-14		PAGE 7 OF 12

1. PRESSURE RELIEF VALVE: CLA VAL MODEL 50-01 OR APPROVED EQUAL
2. SILENT CHECK VALVE: APCO SERIES 600 OR APPROVED EQUAL
3. MOTORIZED BUTTERFLY VALVE: MUELLER LINE SEAL III OR APPROVED EQUAL
4. SPLIT CASE CENTRIFUGAL PUMP
5. PUMP CONCRETE SUPPORT PAD
6. 1/2" THREADED OUTLET, BALL VALVE, SS DIAPHRAGM, AND ASHCROFT TYPE 1009 PRESSURE GAUGE (0-150 PSI) OR APPROVED EQUAL
7. PIPE SUPPORT: B-LINE FIGURE B3088T, B3089, AND B3090 OR APPROVED EQUAL
8. AIR RELEASE VALVE: APCO MODEL 50 WITH 1" THREADED INLET OR APPROVED EQUAL

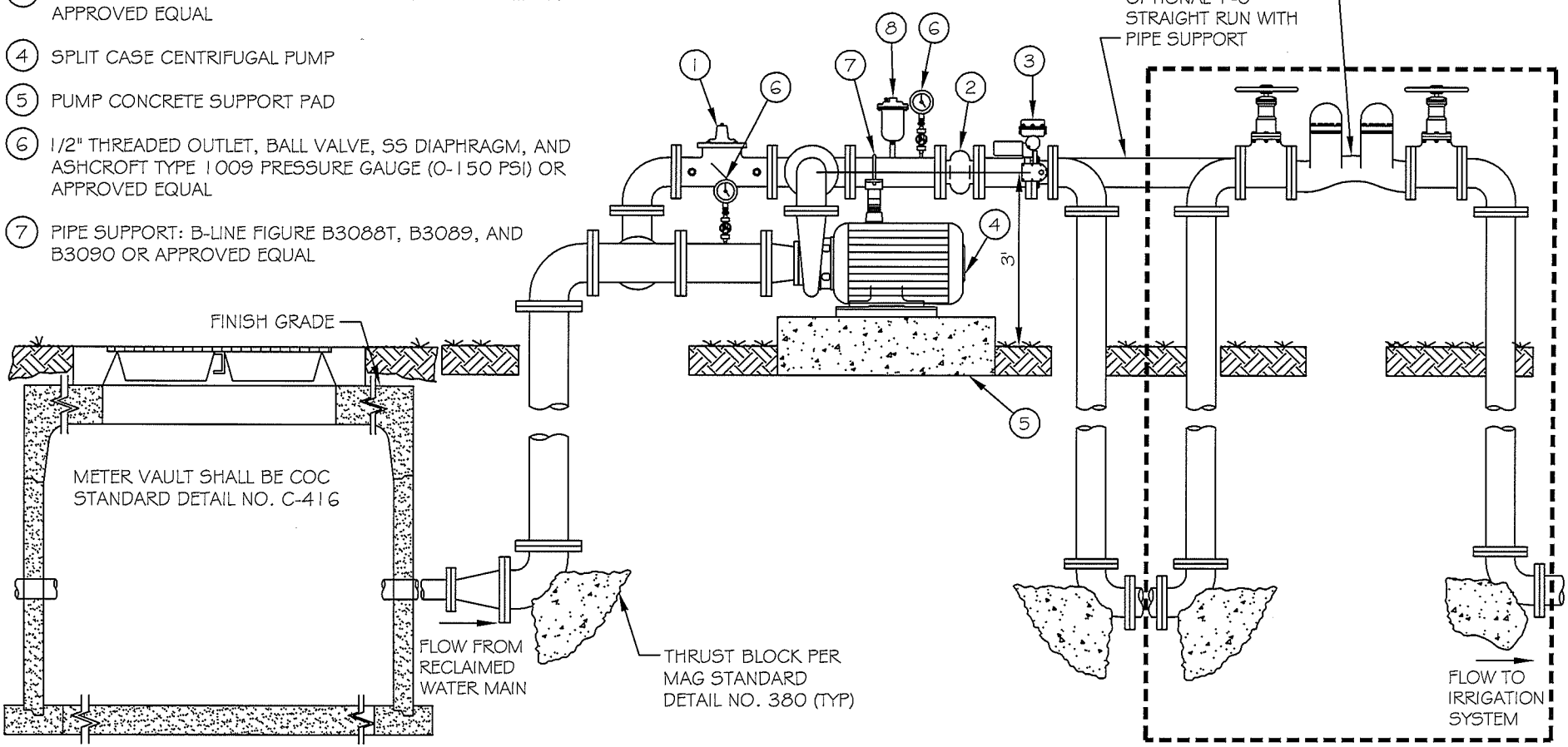

SECTION

DETAIL NO. C-404 PAGE 8 OF 12	CITY OF CHANDLER STANDARD DETAIL	6" RECLAIMED WATER IRRIGATION SERVICE LINE INLINE PUMP TYPE	APPROVED: CITY ENGINEER DATE: 1-9-14	DETAIL NO. C-404 PAGE 8 OF 12

1. PRESSURE RELIEF VALVE : CLA VAL MODEL 6506-01B OR APPROVED EQUAL
2. THRUST BLOCK PER MAG STANDARD DETAIL NO. 380 (TYP)
3. PROPERTY SHALL BE FENCED WITH 6 FOOT BLOCK WALL TO MATCH THE SURROUNDING WALL THEME
4. PROVIDE 6"x3" REDUCER FOR CONTINUATION OF INSTALLATION OF 6" DIAMETER WATER SERVICE CONNECTION LINE, REDUCER SHALL BE LOCATED 2'-0" MAX FROM METER VAULT
5. AIR RELEASE VALVE: APCO MODEL 50 WITH 1/2" THREADED INLET OR APPROVED EQUAL

NOTES:

1. PRESSURE RELIEF VALVE SHALL BE SET AT 2 PSI ABOVE SPRINKLER DESIGN PRESSURE.
2. DEVELOPER SHALL PROVIDE UTILITY SERVICES TO THE FACILITY AS REQUIRED.
3. DEVELOPER MAY USE VARIABLE FREQUENCY DRIVE WITH PUMP IN LIEU OF RETURN LINE.
4. DEVELOPER SHALL INTERLOCK MOTORIZED BUTTERFLY VALVE TO OPEN/CLOSE ON PUMP START/STOP.

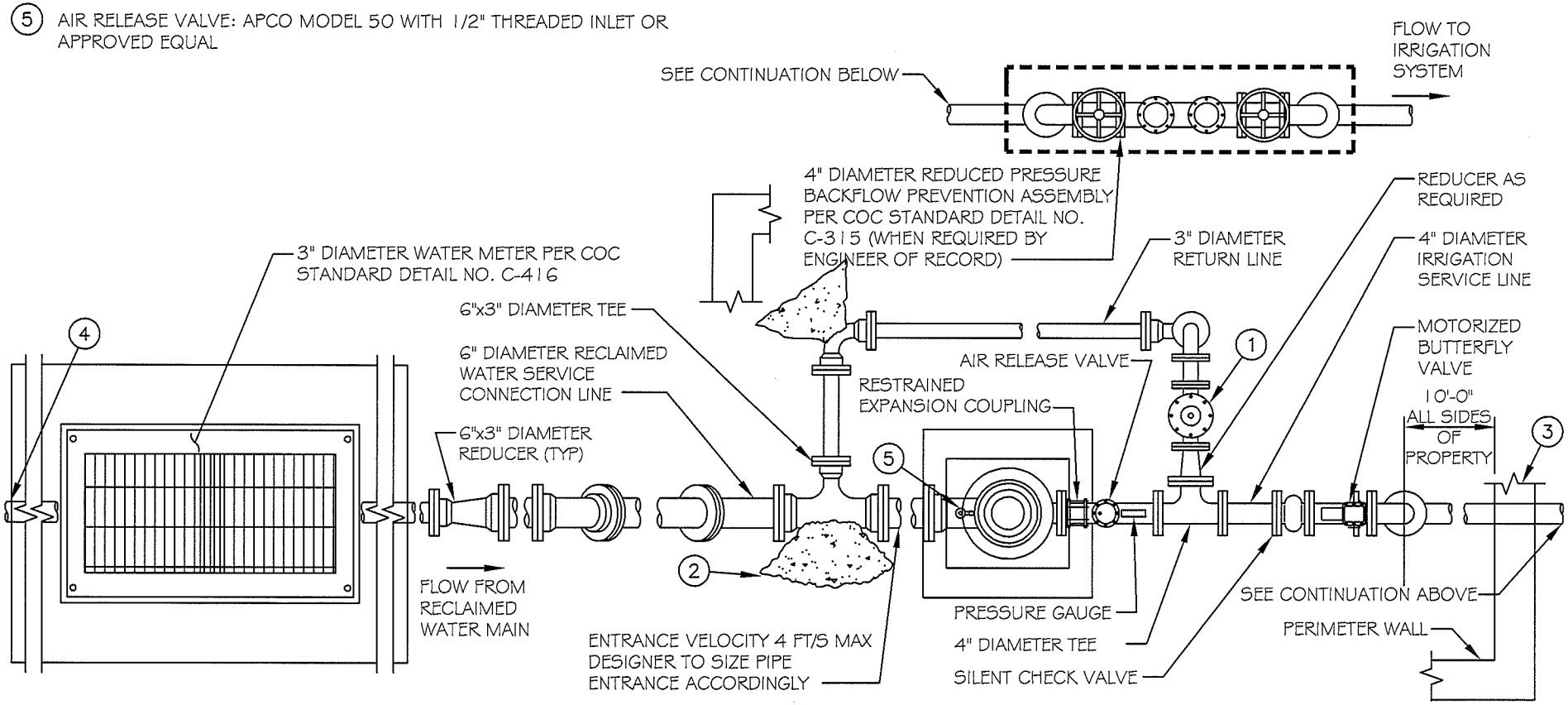

PLAN

DETAIL NO. C-404 PAGE 9 OF 12	CITY OF CHANDLER STANDARD DETAIL	4" RECLAIMED WATER IRRIGATION SERVICE LINE CAN PUMP TYPE	APPROVED: CITY ENGINEER DATE: 1-9-14	DETAIL NO. C-404 PAGE 9 OF 12

1. EPOXY LINED STEEL PUMP CAN, THICKNESS PER PUMP MANUFACTURER
2. 6" CEMENT GROUT SEAL AROUND ENTIRE CAN
3. 4" WIDE BY 1/2" THICK STEEL THRUST COLLAR FULL WELD TO PUMP CAN
4. PUMP SUPPORT BLOCK
5. VERTICAL TURBINE PUMP
6. SILENT CHECK VALVE: APCO SERIES 600 OR APPROVED EQUAL
7. MOTORIZED BUTTERFLY VALVE: MUELLER LINE SEAL III OR APPROVED EQUAL
8. RESTRAINED EXPANSION COUPLING: DRESSER STYLE 127 OR APPROVED EQUAL
9. 1/2" THREADED OUTLET, BALL VALVE, SS DIAPHRAGM, AND ASHCROFT TYPE 1009 PRESSURE GAUGE (0-150 PSI) OR APPROVED EQUAL
10. PROPERTY SHALL BE FENCED WITH 6 FOOT BLOCK WALL TO MATCH THE SURROUNDING WALL THEME
11. DIELECTRIC COUPLING
12. GROUT AROUND ENTIRE MECHANICAL JOINT
13. AIR RELEASE VALVE: APCO MODEL 50 WITH 1" THREADED INLET OR APPROVED EQUAL

NOTE:

1. ALL PIPING SHALL BE DUCTILE IRON (DIP) AS SHOWN.

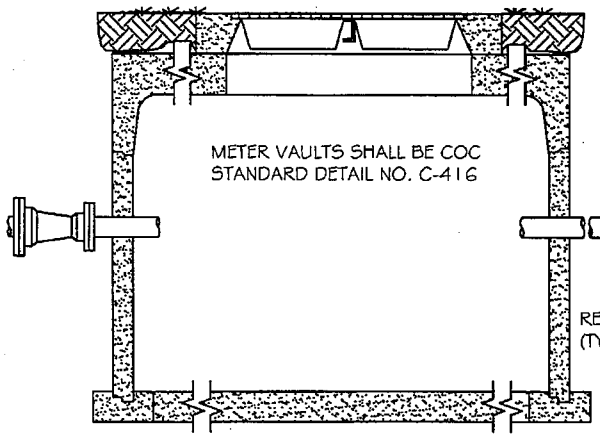

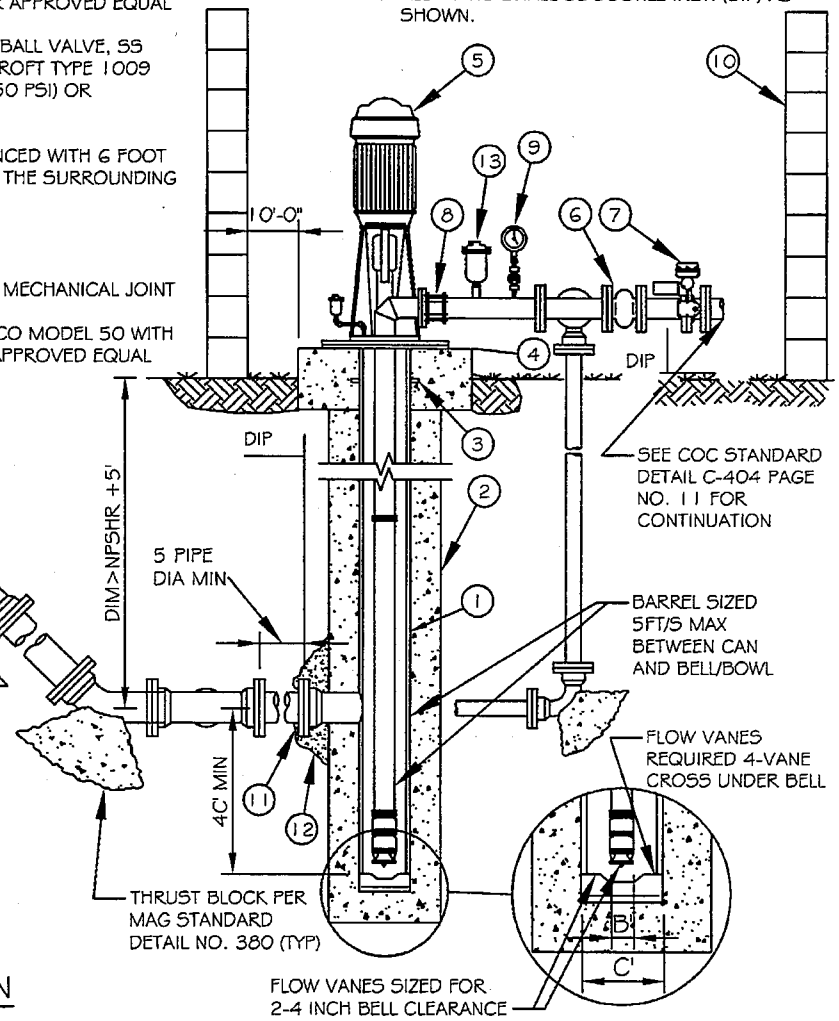

NPSHR= PUMP NET POSITIVE SUCTION HEAD REQUIRED
B' = PUMP SUCTION BELL DIA
C' = CAN OUTSIDE DIA

SECTION

DETAIL NO. C-404 PAGE 10 OF 12	CITY OF CHANDLER STANDARD DETAIL	4" RECLAIMED WATER IRRIGATION SERVICE LINE CAN PUMP TYPE	APPROVED: CITY ENGINEER DATE: June 12/08	DETAIL NO. C-404 PAGE 10 OF 12

1. PRESSURE RELIEF VALVE - CLA VAL MODEL 6506-01B OR APPROVED EQUAL
2. THRUST BLOCK PER MAG STANDARD DETAIL NO. 380 (TYP)
3. PROPERTY SHALL BE FENCED WITH 6 FOOT BLOCK WALL TO MATCH THE SURROUNDING WALL THEME
4. PROVIDE 8"x4" REDUCER FOR CONTINUATION OF INSTALLATION OF 8" DIAMETER WATER SERVICE CONNECTION LINE, REDUCER SHALL BE LOCATED 2' MAX FROM METER VAULT
5. AIR RELEASE VALVE: APCO MODEL 50 WITH 1/2" THREADED INLET OR APPROVED EQUAL

NOTES:

1. PRESSURE RELIEF VALVE SHALL BE SET AT 2 PSI ABOVE SPRINKLER DESIGN PRESSURE.
2. DEVELOPER SHALL PROVIDE UTILITY SERVICES TO THE FACILITY AS REQUIRED.
3. DEVELOPER MAY USE VARIABLE FREQUENCY DRIVE WITH PUMP IN LIEU OF RETURN LINE.
4. DEVELOPER SHALL INTERLOCK MOTORIZED BUTTERFLY VALVE TO OPEN/CLOSE ON PUMP START/STOP.

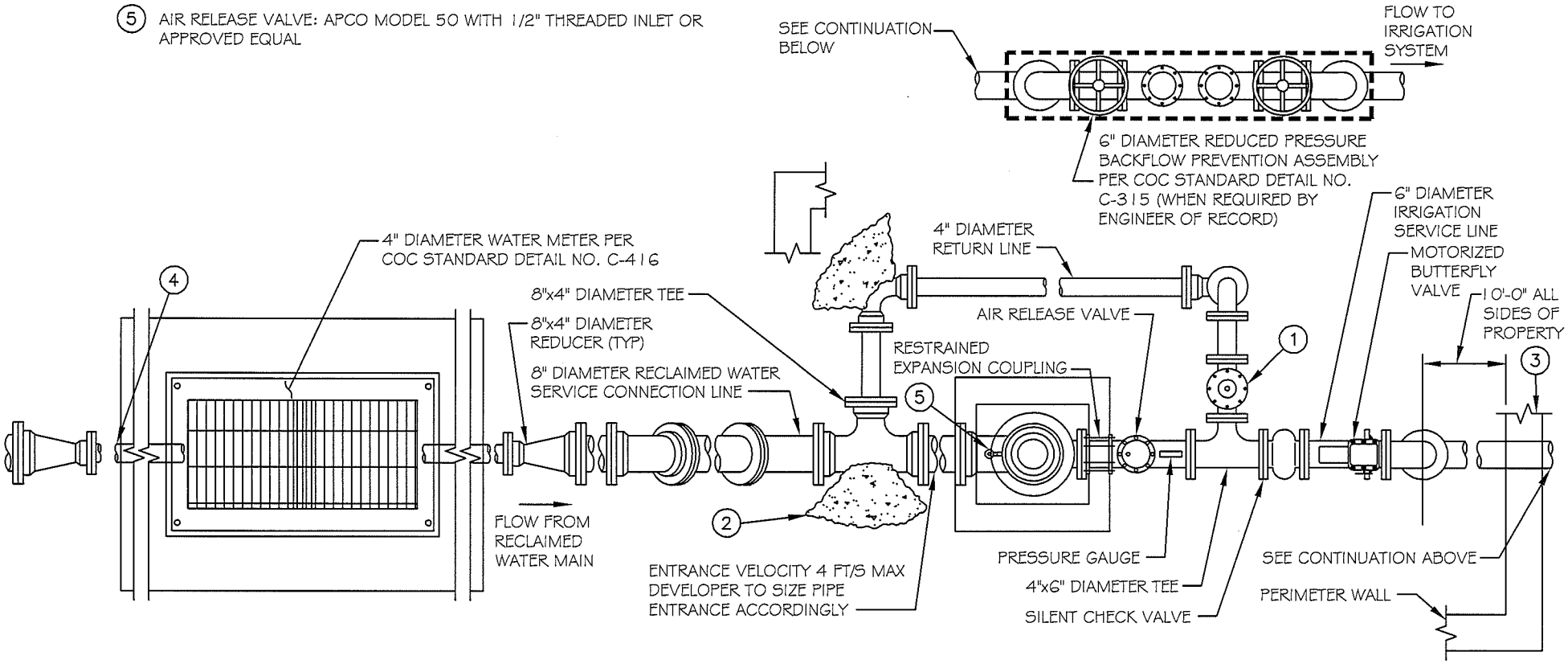

DETAIL NO.					DETAIL NO.
C-404	CITY OF CHANDLER STANDARD DETAIL	**6" RECLAIMED WATER IRRIGATION SERVICE LINE CAN PUMP TYPE**	APPROVED: CITY ENGINEER		**C-404**
PAGE 11 OF 12			DATE: 1-9-14		PAGE 11 OF 12

1. EPOXY LINED STEEL PUMP CAN, THICKNESS PER PUMP MANUFACTURER
2. 6" CEMENT GROUT SEAL AROUND ENTIRE CAN
3. 4" WIDE BY 1/2" THICK STEEL THRUST COLLAR FULL WELD TO PUMP CAN
4. PUMP SUPPORT BLOCK
5. VERTICAL TURBINE PUMP
6. SILENT CHECK VALVE: APCO SERIES 600 OR APPROVED EQUAL
7. MOTORIZED BUTTERFLY VALVE: MUELLER LINE SEAL III OR APPROVED EQUAL
8. RESTRAINED EXPANSION COUPLING: DRESSER STYLE 127 OR APPROVED EQUAL
9. 1/2" THREADED OUTLET, BALL VALVE, SS DIAPHRAGM, AND ASHCROFT TYPE 1009 PRESSURE GAUGE (0-150 PSI) OR APPROVED EQUAL
10. PROPERTY SHALL BE FENCED WITH 6 FOOT BLOCK WALL TO MATCH THE SURROUNDING WALL THEME
11. DIELECTRIC COUPLING
12. GROUT AROUND ENTIRE MECHANICAL JOINT
13. AIR RELEASE VALVE: APCO MODEL 150 WITH 1" THREADED INLET OR APPROVED EQUAL

NOTE:

1. ALL PIPING SHALL BE DUCTILE IRON (DIP) AS SHOWN

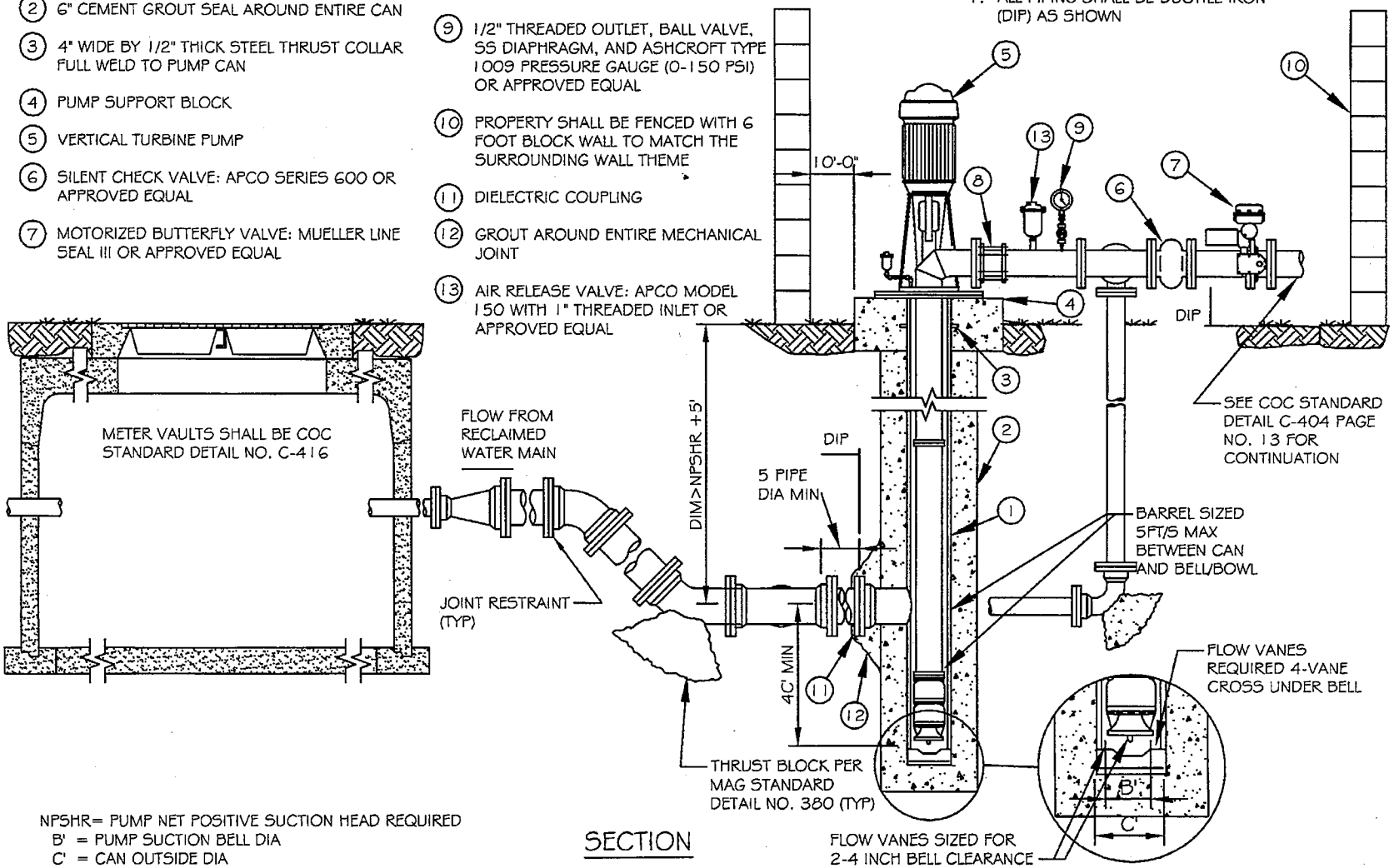

NPSHR= PUMP NET POSITIVE SUCTION HEAD REQUIRED
B' = PUMP SUCTION BELL DIA
C' = CAN OUTSIDE DIA

SECTION

DETAIL NO. C-404 PAGE 12 OF 12	CITY OF CHANDLER STANDARD DETAIL	6" RECLAIMED WATER IRRIGATION SERVICE LINE CAN PUMP TYPE	APPROVED: CITY ENGINEER DATE: June 12/08	DETAIL NO. C-404 PAGE 12 OF 12

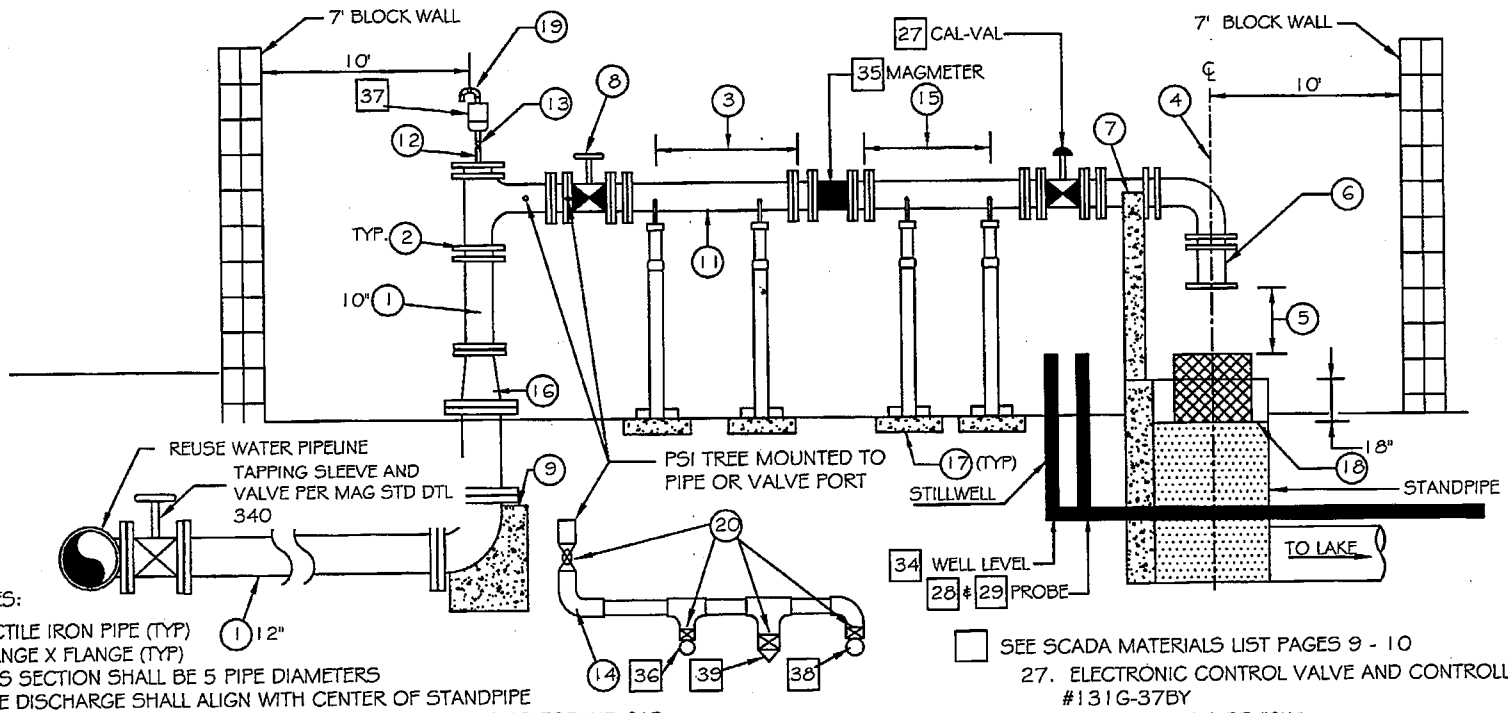

NOTES:

1. DUCTILE IRON PIPE (TYP)
2. FLANGE X FLANGE (TYP)
3. THIS SECTION SHALL BE 5 PIPE DIAMETERS
4. PIPE DISCHARGE SHALL ALIGN WITH CENTER OF STANDPIPE
5. THIS SPACING SHALL BE GREATER THAN 2 PIPE DIAMETERS FOR AIR GAP
6. 1' SPOOL PIECE
7. PROVIDE CONCRETE SUPPORTS AS SHOWN
8. PROVIDE RESILIENT SEAT GATE VALVE
9. PROVIDE THRUST BLOCK PER MAG STD DTL 380
10. (NOT USED)
11. 10" D.I.P., TYP.
12. ALL 2" & 1" PIPE SHOULD BE BRASS
13. 2" BALL-CORP VALVE BRASS MALE IN/OUT
14. 1" PSI TREE-SEE DETAIL-BRASS
15. THIS SECTION SHALL BE 3 PIPE DIAMETERS
16. REDUCER MAY BE INSTALLED 12" X 10"
17. PIPE SUPPORTS BOLTED TO 6" CONCRETE FOOTING (TYP)
18. METAL GRATE BOX OVER TOP OF STANDPIPE
19. ALL BRASS FITTINGS
20. 1" BALL-CORP VALVE BRASS

SEE SCADA MATERIALS LIST PAGES 9 - 10

27. ELECTRONIC CONTROL VALVE AND CONTROLLER CLA-VAL #131G-37BY
28. LEVEL PROBE WIRE #3WI
29. PROBE FITTING 3E-3B
34. WELL LEVEL TRANSDUCER CWLTY
35. MAG METER CADILLAC #CMAGxRCF150SSFM
36. GAUGE #AX9831741-4
37. AIR RELIEF/VACUUM CHECK 2" #144DAT.1-F2-16/57
38. PRESSURE TRANSMITTER #CPLVY-0303-2013-Z-RNG
39. CALIBRATION PORT: BRASS

NOTES:

1. PROPERTY SHALL BE DEDICATED TO CITY AND KEYED TO CITY LOCK SYSTEM.
2. PROPERTY SHALL BE FENCED WITH 7' BLOCK WALL TO MATCH THE SURROUNDING WALL THEME.
3. THE TURNOUT STRUCTURE SHALL HAVE THE CAPACITY TO CONVEY 2,000 GPM WITHOUT OVERFLOWING.
4. WIRING TRENCH AND JUNCTION BOXES SHALL BE LOCATED ON FAR SIDE OF PIPE AWAY FROM GATE.

DETAIL NO. C-405 NTS	CITY OF CHANDLER STANDARD DETAIL	LARGE WATER USER (WITH LAKE) RECLAIMED WATER TURNOUT	APPROVED: CITY ENGINEER DATE: 01/08/09	DETAIL NO. C-405 PAGE 1 OF 12

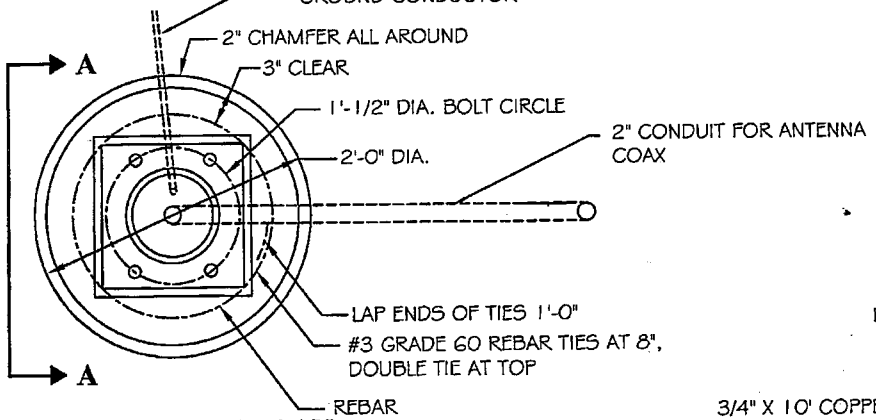

FOUNDATION PLAN

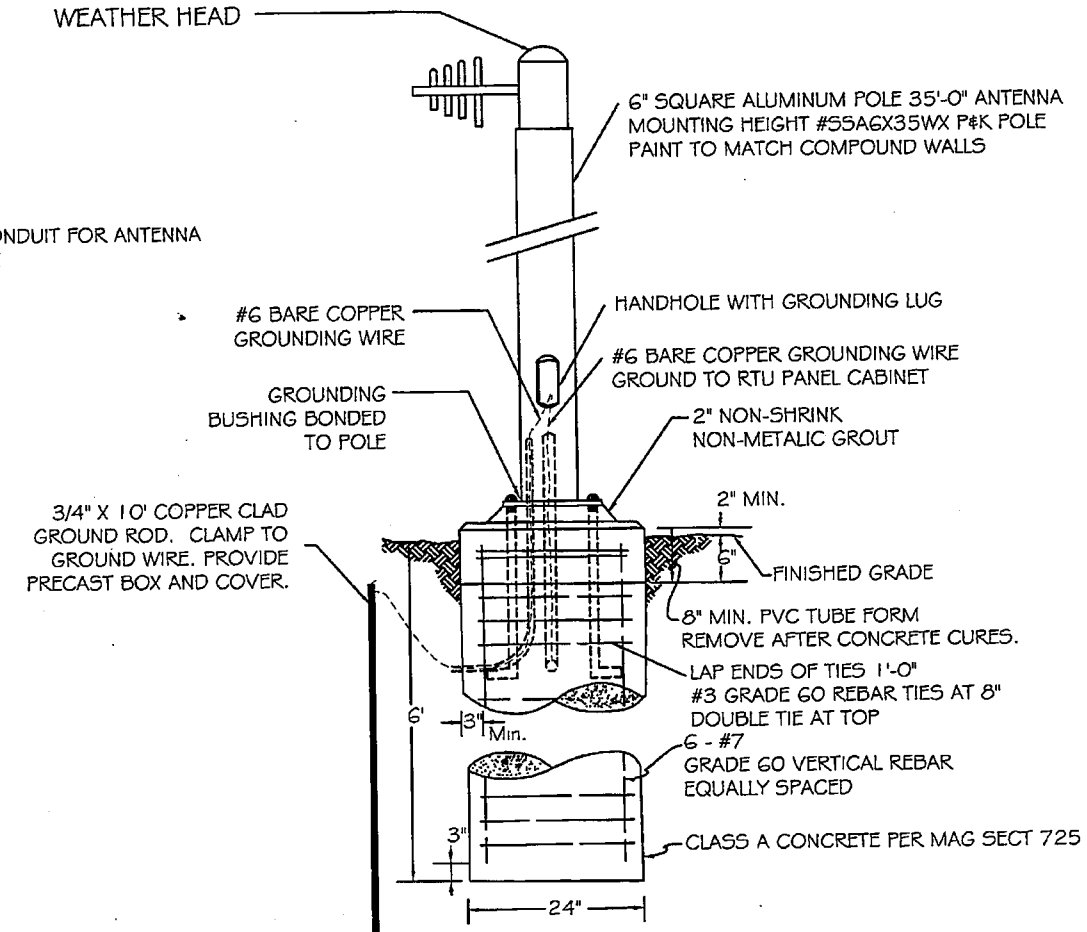

SECTION A-A

NOTES:

1. THE COMPLETE INSTALLATION SHALL WITHSTAND 110 MHP WINDS.
2. ANCHOR BOLTS, LEVELING NUTS, AND POLE BASE SHALL BE FABRICATED BY POLE MANUFACTURER.

DETAIL NO. **C- 405** NTS	CITY OF CHANDLER STANDARD DETAIL	**ANTENNA**	APPROVED: CITY ENGINEER DATE: 01/08/09	DETAIL NO. **C- 405** PAGE 2 OF 12

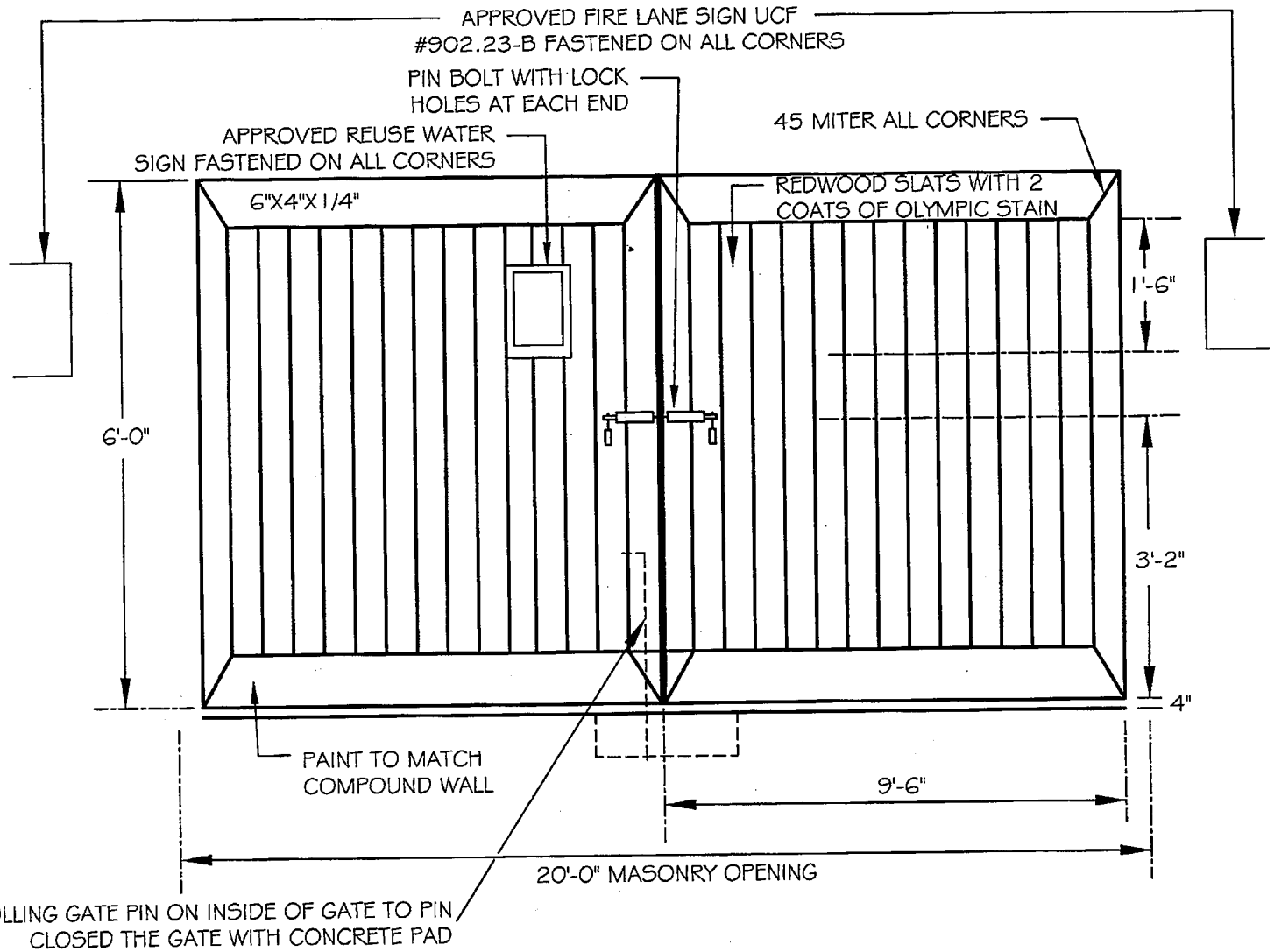

DETAIL NO. **C- 405** NTS	CITY OF CHANDLER STANDARD DETAIL	**ROLLING GATE**	APPROVED: CITY ENGINEER DATE: 01/08/09	DETAIL NO. **C- 405** PAGE 3 OF 12

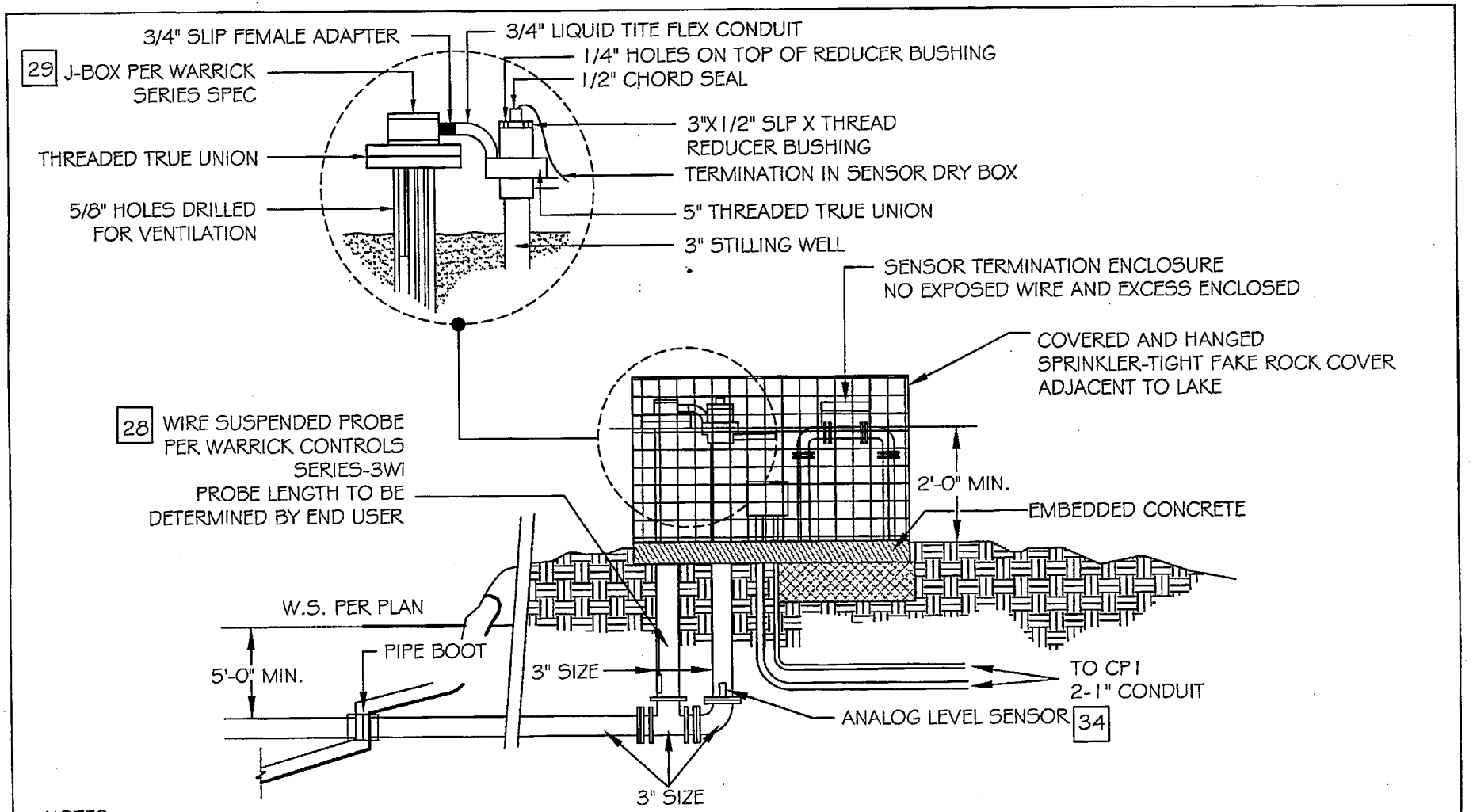

NOTES:

1. LEVEL SENSORS MAY BE LOCATED WITHIN WALLED TURNOUT COMPOUND OR ADJACENT TO LAKE.
2. WHERE ADJACENT TO LAKE, LEVEL SENSORS SHALL BE PROTECTED BY A SCREENED ENCLOSURE COVER BY SIMULATED ROCK.
3. SIMULATED ROCK SHALL BE KRUP.COM INC #AE-CROWN, ORBIT IRRIGATION PRODUCTS INC #35016 GRANITE ROCK BOX, OR ARMORCAST PRODUCTS #P218
4. LEVEL CONTROL LOCATION SHALL BE FIELD LOCATED IN CONSULTATION WITH MR. DAVID CLARK (480) 783-3720

DETAIL NO.					DETAIL NO.
C- 405 NTS	CITY OF CHANDLER STANDARD DETAIL	**LEVEL SENSORS**	APPROVED: CITY ENGINEER DATE: 01/08/09		**C- 405** PAGE 4 OF 12

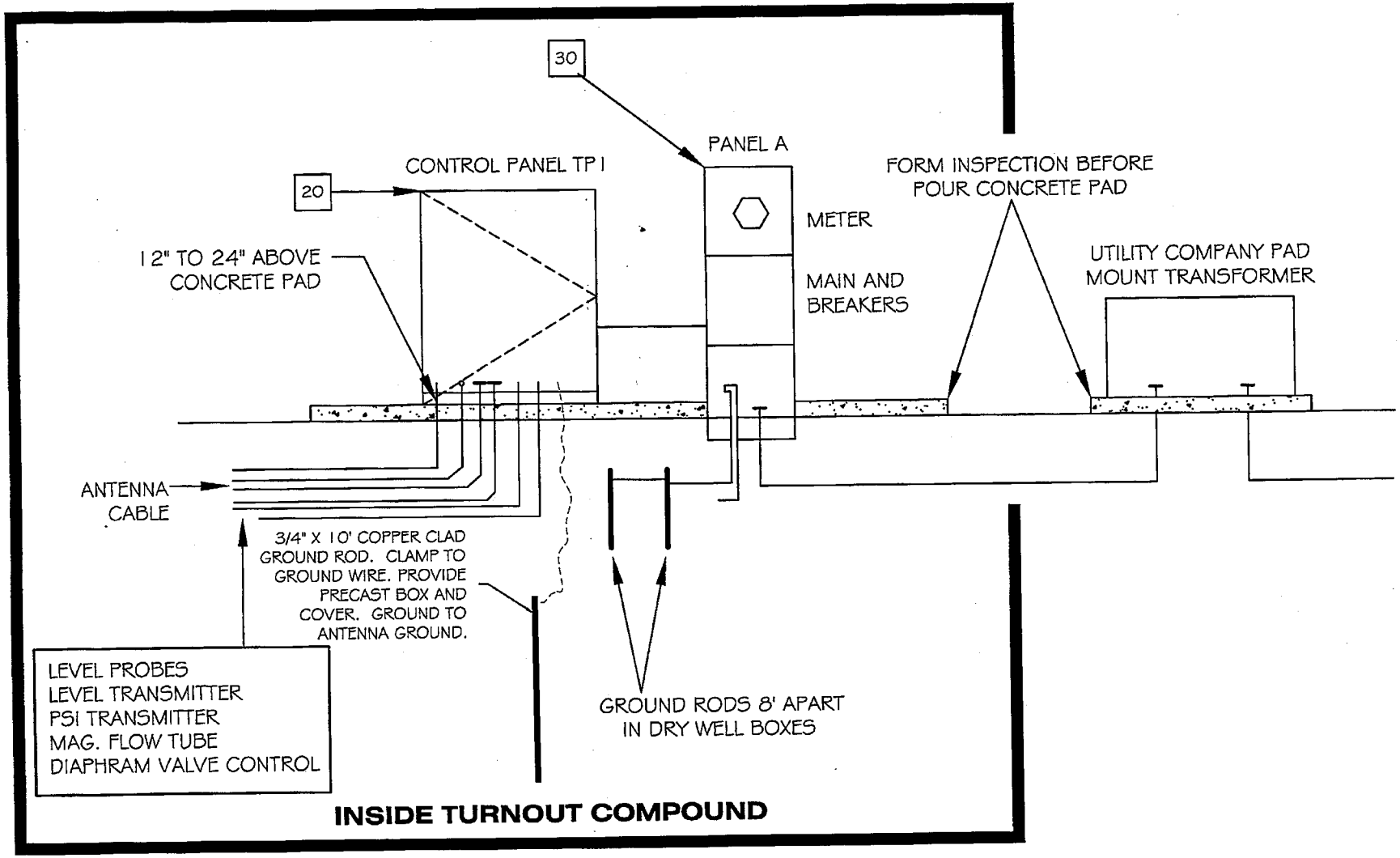

INSIDE TURNOUT COMPOUND

DETAIL NO.					DETAIL NO.
C- 405 NTS	CITY OF CHANDLER STANDARD DETAIL	**METERPED**	APPROVED: CITY ENGINEER DATE: 01/08/09		**C- 405** PAGE 5 OF 12

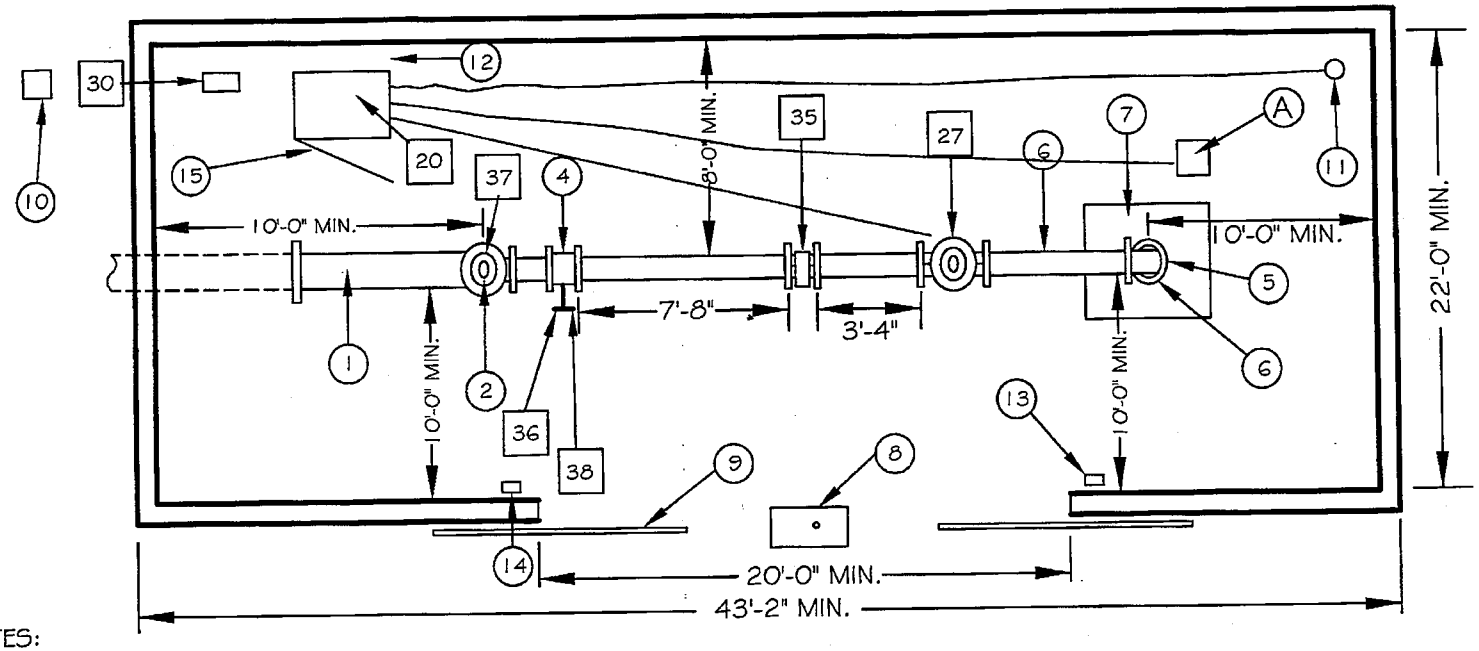

NOTES:

1 12" DUCTILE IRON PIPE
2 2" BALL-CORP. STOP-MALE BRASS PIPE IN/OUT
3 12"X10" CONCENTRIC REDUCER (NOT SHOWN)
4 10" VALVE PER "KENNEDY VALVE" KENSEAL II WITH FLANGED ENDS
5 10" DUCTILE IRON 90 DEGREE ELBOW
6 10" DUCTILE IRON SPOOL PIECE
7 SAFETY SCREEN
8 ROLLING GATE PIN PAD
9 ROLLING GATE PIN ON INSIDE
10 UTILITY COMPANY PAD MOUNT TRANSFORMER
11 ANTENNA
12 MAINTAIN 2' CLEARANCE
13 LIGHT & AC OUTLET
14 LIGHT AC OUTLET & SWITCH
15 DOOR OPENING AS SHOWN
A LEVEL SENSORS

BOXED NOTES - SEE SCADA MATERIAL LISTS PAGES 9 & 10

20 CONTROL PANEL
27 CLA-VAL ELECTRIC VALVE
30 SRP METER PAD
35 10" MAG. METER
36 4" PRESSURE GAUGE
37 2" AIR RELEASE VALVE/VACUUM CHECK
38 PRESSURE TRANSMITTER

ALL CONDUIT RUNS SHALL BE LOCATED ON CONTROL PANEL SIDE OF COMPOUND.

DETAIL NO. C- 405 NTS	CITY OF CHANDLER STANDARD DETAIL	TURNOUT COMPOUND	APPROVED: CITY ENGINEER DATE: 01/05/09	DETAIL NO. C- 405 PAGE 6 OF 12

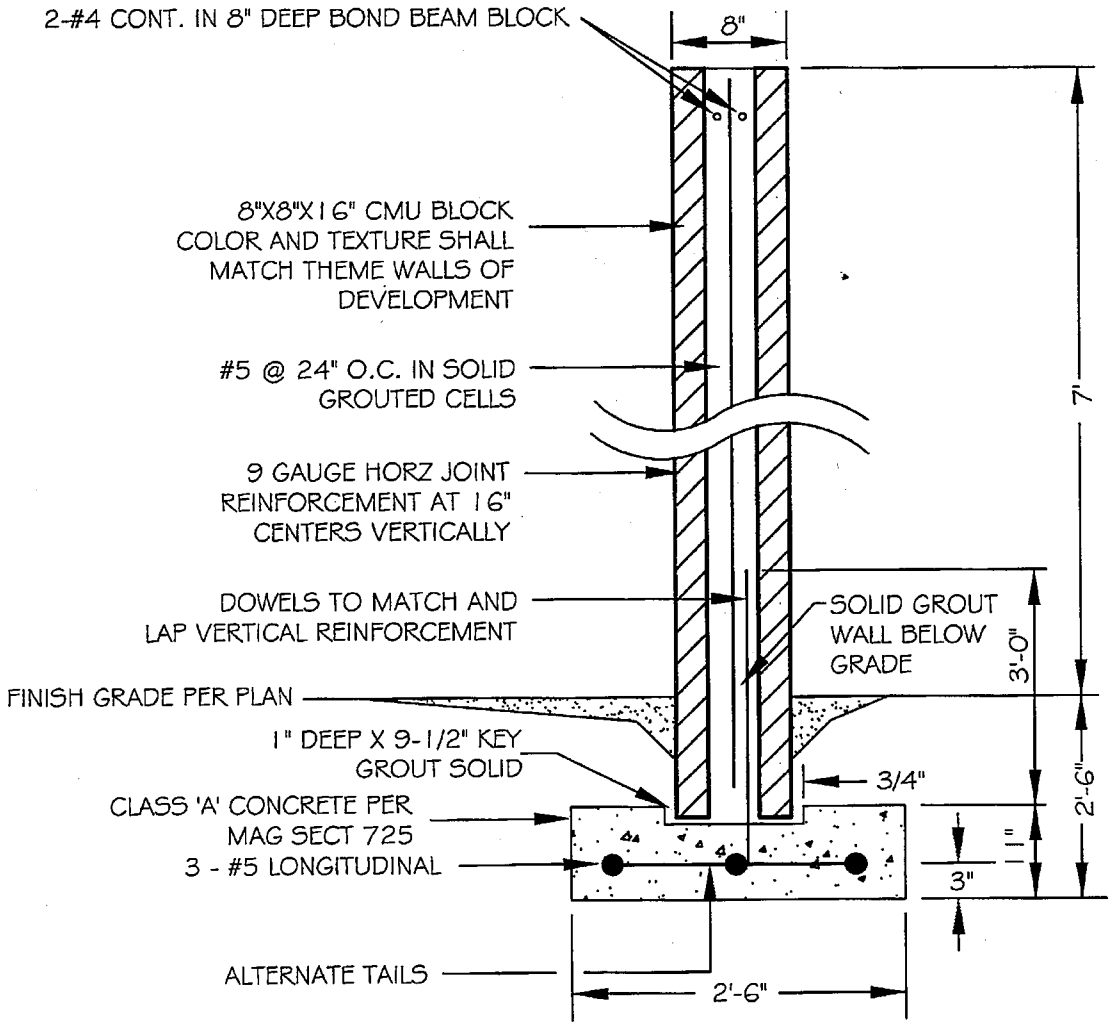

NOTES

CONSTRUCTION IN ACCORDANCE WITH MAG SECT 510

CONCRETE SHALL BE IN ACCORDANCE WITH MAG SECT 725

REINFORCING STEEL SHALL CONFORM TO ASTM SPEC A615 GRADE 60

CONTROL JOINTS AT 24' INTERVALS

MASONRY: f'm=1500 psi, ASTM C90, MEDIUM OR NORMAL WEIGHT, RUNNING BOND, SLUMP BLOCK.

MORTAR: ASTM C270, TYPE S

GROUT: ASTM C476, TYPE COARSE

JOINT REINFORCEMENT: 9 GAUGE LADDER OR TRUSS TYPE, STANDARD WEIGHT, fy=33,000psi, WIRE PER ASTM A82

DETAIL NO. C-405 NTS	CITY OF CHANDLER STANDARD DETAIL	COMPOUND WALL	APPROVED: CITY ENGINEER DATE: 01/08/09	DETAIL NO. C-405 PAGE 7 OF 12

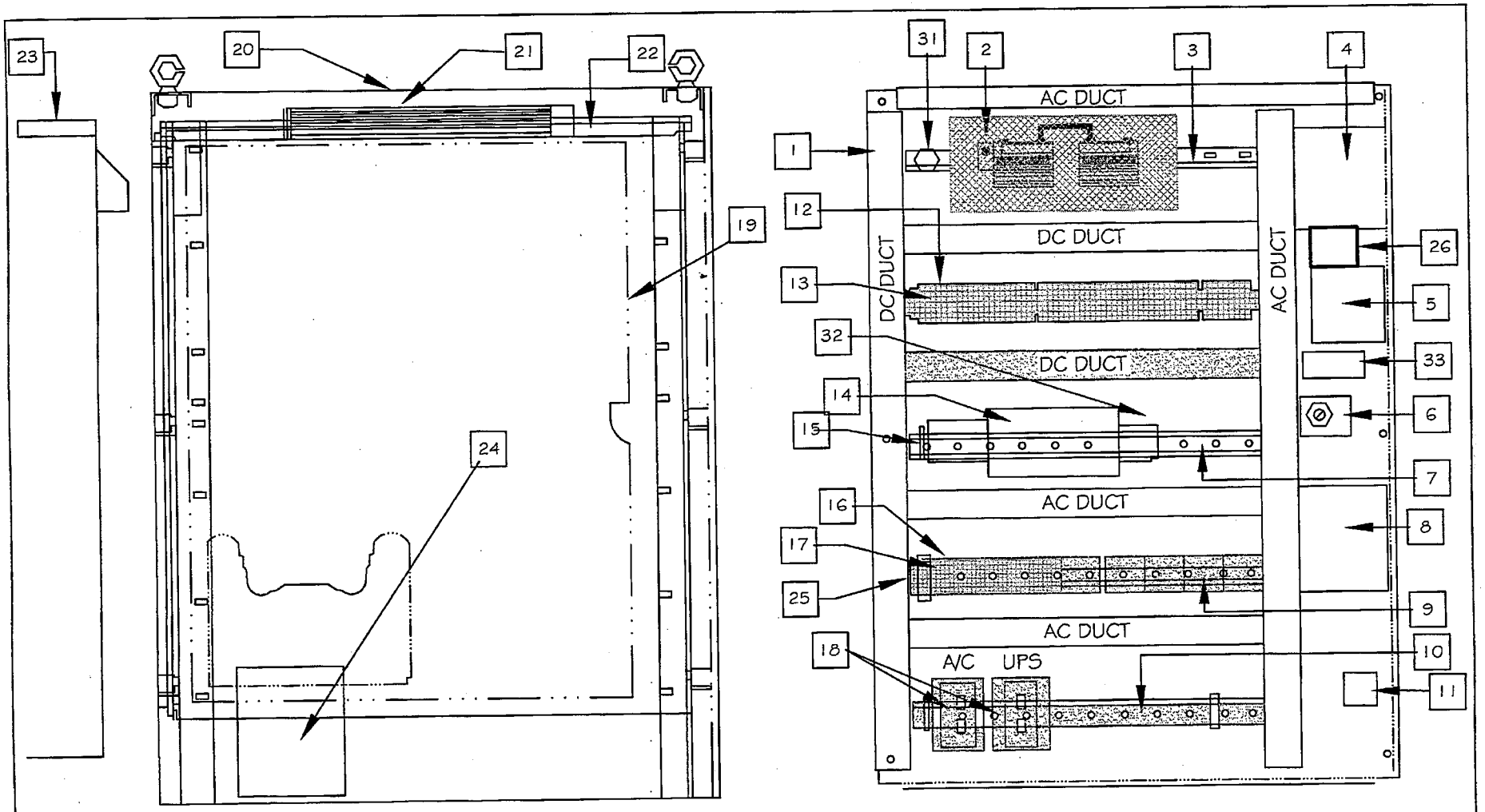

SEE SCADA MATERIAL LIST
PAGES 9 - 10

AC WIRING - RED COLORING HOT
AC WIRING - WHITE COLORING COMMON
AC WIRING - GREEN COLORING EARTH GROUND
DC WIRING - BLUE COLORING +
DC WIRING - WHITE/BLUE COLORING -
ANALOG WIRING - CABLE SHIELDED
AC & DC NOT IN SAME RACEWAY

DETAIL NO.					DETAIL NO.
C- 405	CITY OF CHANDLER STANDARD DETAIL	**SCADA CABINET**	APPROVED: CITY ENGINEER		C- 405
NTS			DATE: 01/08/09		PAGE 8 OF 12

ITEM	DESCRIPTION	MFG	CATALOG	QTY
1	PLASTIC WIRE DUCT	PANDUIT		
2	DIGITAL 16 INPUT/16OUTPUT BASE	MODICON Summit 602-267-1000	MODEL 170 ADM35010	1
2	I/O BUS ADAPTER	MODICON	MODEL 170 INT11000	1
2	ANALOG INPUT BASE	MODICON	Model 170AAI1400	1
2	PROCESOR WITH INTERBUS PORT	MODICON	Model 171CCS76000	1
2	PROCESSOR OPTION ADATOR (REDUNDANT MB+)CLOCK	MODICON	Model 172PNN26022	1
2	I/O BUS ADAPTER CABLE	MODICON		1
3	STANDARD DIN RAIL 35 MM X 7.5 MM	'ALLEN BRADLEY	199-DR1	1
4	MAG FLOWMETER CONVERTER PANEL MOUNT 120 VAC, 4-20 MA, HART, LCD DISPLAY FOR <16 INCH DETECTORMAG FLOW TUBE SEPARATE ELECTRONICS	Cadillac-AXIOM SOUTHWEST 480-814-7706	CMCRUXXFTFM 2AS Length in feet 3AE Length in ft	1
5	PROTOCOL CONVERTER HART TO MODBUS RTU W/CONFIGURATION SOFTWARE	ARCOM 1-913-549-1000	HT-DS-1	1
6	SELECTOR SW--3 POS MAINT, NEMA 4/13 30.5 MM, KNOB 1NO-1NC SCREW TERMINALS	SQUARE D	9001KS43BH13	1
7, 10, 12 & 25	RAISED DIN RAIL 35 MM X 7.5 MM	ALLEN BRADLEY BORDER 602-244-0331	1492-DR6	4
8	RADIO TRANSCIEVER LICENSED 800 TO 960 MHZ, 5 WATTS, -30 DEG C TO + 60 DEG.C	MDS Radio Border States Electric 602-244-0331	9710A	1
9	LEVEL RELAY PLUG-IN DRDT, 10KOHM, 120 VAC, 10 SEC W/ BASE	WARRICK	16DMB1A0-X-10-10	2
9	RELAY--ICE CUBE ICE CUBE 24 VDC COIL DPDT, 10 A CONTACTS W/NR51 BASE	SQUARE D	8591KP12V14	2
9	RELAY--ICE CUBE ICE CUBE 120 VAC COIL DPDT, 10 A CONTACTS W/NR51 BASE	SQUARE D	8501KP12V20	1
11	LIGHTNING PROTECTOR FLANGE MOUNT 1225-1000MHZ, F/F 220 ? J	POLYPHASER	IS-50NX-C2	1
13 & 16	TERMINAL BLOCK DOUBLE FEED--THROUGH BLUE, 24-12 AWG 32 A .25 INCH	PHOENIX CONTACT	UDK 4 BU	74
14	POWER SUPPLY TRACK MOUNTED 24VDC, 240W, 10A W/INTERNAL FUSING	IDEC	PSR5-G24	1
15	POWER SUPPLY TRACK MOUNTED 12VDC, 30W, 2.5A W/INTERNAL FUSING	IDEC	PSR5-C12	1
17	TERMINAL BLOCK DOUBLE FEED--THROUGH GRAY, 24-12 AWG 32 A .25 INCH	PHOENIX CONTACT	UDK 4	26
18	DUPLEX RECEPTACLE TRACK MOUNTED 120V, 15A	PHOENIX CONTACT	EM-DUO/120/15	2
19	BACKPANEL, PAINTED STEEL FOR F5 ENCLOSURE	HOFFMAN BrownWholeSale 602-275-8521	A60P36F1	1
20	ENCLOSURE, FREE STANDING, NEMA 12, PAINTED STEEL	HOFFMAN	A603624FS	1
21	LIGHTING PACKAGE, FLUORESCENT, 115 VAC .63 AMPS PROVIDE BULBS (NOT IN PACKAGE)	HOFFMAN	A-LFM16D18	1
22	DRIP SHIELD FOR NEMA 12, 4 NEMA 3R, 36 IN WIDE	HOFFMAN	ADK36A	1
23	AIR CONDITIONER SIDE PANEL MOUNT 115 VAC, 4000 BTU	HOFFMAN	M33-0416-G010	1
24	UPS PRO LINE 850 VA FOR 9 MINUTES 26 MINUTES AT HALF POWER	TRIPPLITE	BCPRO850	1
26	ELECTRONIC VALVE CONTROLLER AND SIGNAL RETRANSMISSION MODULES	CLA-VAL ESCO Phone # (602) 264-7946	131VC-1	1
27	10" PIPE DIAMETER WITH HEAVIER SPRING ELECTRIC VALVE	CLA-VAL ESCO Phone # (602) 264-7946	131G-37BY	1
28	LEVEL PROBE WIRE SUSPENDED STAINLESS STEEL W/PVC COATED WIRE	WARRICK	3W1	3

DETAIL NO.
C- 405
NTS

CITY OF CHANDLER STANDARD DETAIL

MATERIALS LIST 1 OF 2

APPROVED: _____ CITY ENGINEER
DATE: 01/08/09

DETAIL NO.
C- 405

ITEM	DESCRIPTION	MFG	CATALOG	QTY
29	PROBE FITTING, PIPE MOUNT, 2 IN , 3 PROBE, BRASS	WARRICK	3E-3B	1
30	LOW PROFILE PEDESTALS	TESCO #(916) 395-8800	26-000 typeIIIAF	1
31	TYPE T THERMOCOUPLE XMTR MINATURE SCALED 0 - 250 DEG F	AXIOM	AXT251-T-0-250F	1
32	1 POLE CIRCUIT BREAKER MINIATURE TRACK MOUNTED 16 A, B (FAST) CURVE MERLIN GERIN	SQUARE D	MG24118	1
33	LCD DISPLAY SCALEABLE FOR ENG UNITS INCHES AND FEET	AXIOM SOUTHWEST 480-814-7706	AX685	
34	WELL LEVEL TRANSDUCER .1% ACCURACY, HART DIGITAL PROTOCOL, RANGE 16.7 ' SPAN,CABLE LENGTH 20' WITH REMOTE DISPLAY	AXIOM SOUTHWEST 480-814-7706	CWLTY-0303-26-26 W-05-RNG16.7ft-02-1907-LEN20ft/CWD50 -0325-2603	1
35	MAGMETER CADILLAC MAG FLOW TUBE 10", ANSI 150LB, 316SS, RUBBER	Cadillac-AXIOM SOUTHWEST 480-814-7706	Model CMAGIRCF150SDSFM	1
36	GAUGE MODEL 30 INWC/0/+100PSI	AXIOM SOUTHWEST 480-814-7706	Ax9831741-4	1
37	AIR RELIEF/VACUUM CHECK 2"	GOBLE SAMPSON 480-969-3667	MODEL# 144DAT.1-F2-16/57	1
38	PRESSURE TRANSMITTER WITH LOCAL DISPLAY TX -15 TO +285 PSI, CONFIGURATION, HART COMPATIBLE, 1/2" CONNECTION, LOOP POWERED 4 - 20 MA OUTPUT.	AXIOM SOUTHWEST 480-814-7706	CPLVY-0303-0213-Z-RNG(-15to+285psig)-02-1916-1326-22	1
39	BRASS CALIBRATION PORT¼ WITH CHECK AND CAP	RALSTON INDUSTRIES (800) 347-6575	#QTFT 2MBI	1
	COAXIAL CABLE --HELIAX 7/8 INCH W/CONNECTORS	ANDREW	LDF5-50	2
	MULTI-CONDUCTOR CABLE--BRAID SHIELDED CONTROL CABLE--18AWG--2 CONDUCTOR (19 X 30) 600V. -65 TO 200 DEG C	BELDEN	83321	9
	CABLE ASSEMBLY--CUSTOM--22AWG	GENERIC	RS323C	1
	RESISTOR 250 OHM, 1 WATT	GENERIC	RES-250	1
	PLUG NEMA 5-15P, 15A, 125 VAC	HUBBEL	HBL5266C	2
	BARE THERMOCOUPLE TYPE T 20 GA. 12" LONG PLUS 3" LEADS	OMEGA	BARE-20-T-12	1
	ANTENNA YAGI 890-960 MHZ W/ MOUNTING HARDWARE	SCALA	TY-900	1
	PANEL SUPPORT, STEEL	HOFFMAN	A60FSHDPS	1
	END BRACKET UNIVERSAL FOR 2 OR 3 LEVEL GRAY	PHOENIX CONTACT	E/UK 1	8
	FUSE TERMINAL BLOCK WITH SCREW CAP TRACK MOUNTED 250 VAC, 20 A FOR BUSSMAN GMC GLASS FUSES	PHOENIX CONTACT	UK 10-DREHSLA 250 (5 X 20)	4
	FUSE, GLASS 5 MM X 20 MM 250 VAC 3.15 AMP MEDIUM TIME DELAY	BUSSMAN	GMC 3.15A	
	END COVER UNIVERSAL GRAY	PHOENIX CONTACT	D-UDK 4	6
	TERMINAL BLOCK DOUBLE FEED--THROUGH GRN-YLW, 24-12 AWG, 32A GROUND TO RAIL .25 INCH	PHOENIX CONTACT	UDK 4-PE	8
	NAMEPLATE ENGRAVED PLASTIC BLACK W/ WHITE LETTERING 1 X 0.25 INCH, TEXT .1 IN TALL	GENERIC	NPGN1X.250LT	24
	NAMEPLATE ENGRAVED PLASTIC BLACK W/ WHITE LETTERING 3 X 1 INCH, TEXT .1 & .2 IN TALL	GENERIC	NPGN312LT	2
	NAMEPLATE ENGRAVED PLASTIC BLACK W/ WHITE LETTERING 3 X 1 INCH, TEXT .1, .2 , & .15 IN TALL	GENERIC	NPGN312L3PT	1
	NAMEPLATE ENGRAVED PLASTIC BLACK W/ WHITE LETTERING 3 X 1 INCH, TEXT .5 IN TALL	GENERIC	NPGN311L	1
	CUSTOM BRACKET PAINTED STEEL 18 GA DIMENSIONS AS SHOWN	GENERIC	BRKT-1	1
	METAL LEGS TO RAISE PANEL A MINIMUM OF 12" --MAXIMUM 24" ABOVE THE PAD	HOFFMAN	SEE OPTION	1 set

DETAIL NO.
C- 405
NTS

CITY OF CHANDLER STANDARD DETAIL

MATERIALS LIST 2 OF 2

APPROVED: _____ CITY ENGINEER
DATE: 01/08/09

DETAIL NO.
C- 405

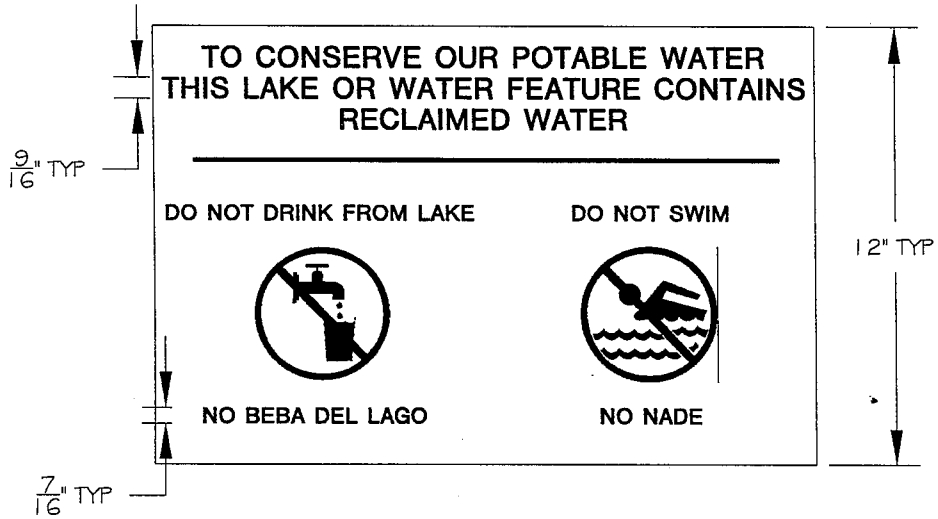

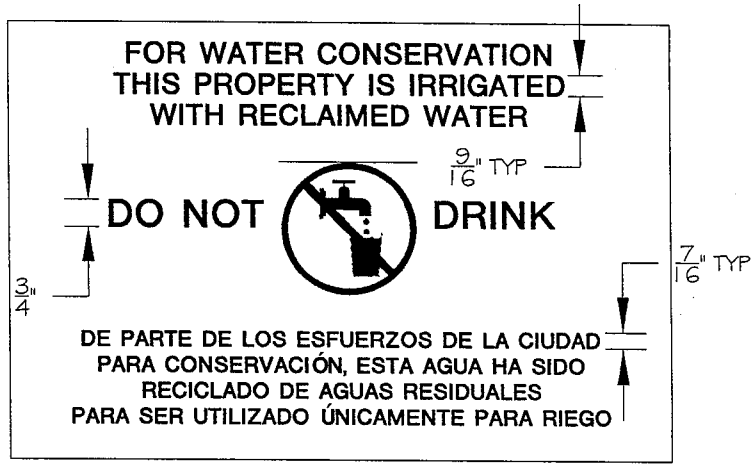

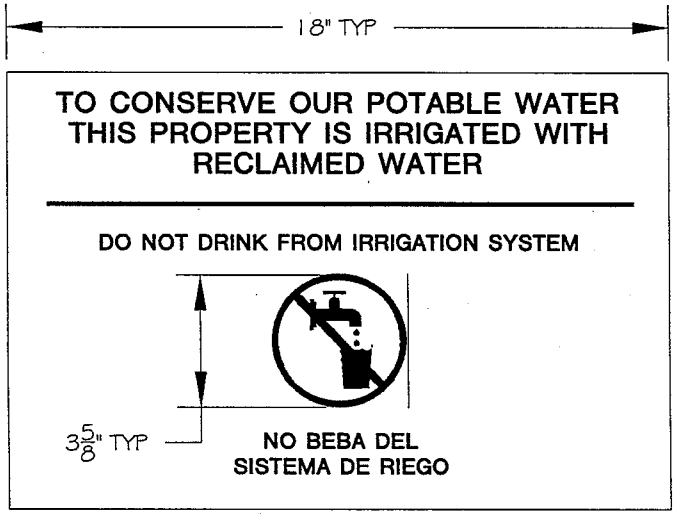

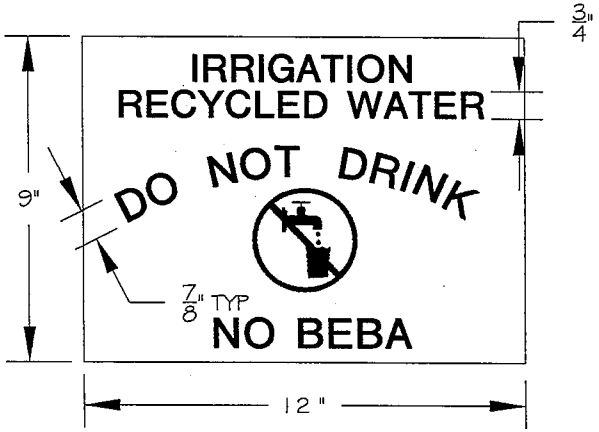

NOTES:

COLOR: COPY: WHITE
BACKGROUND: PURPLE (PANTONE 512)

SIGN PANEL: 1/8" ALUMINUM ALLOY 5052-H38 PER ASTM B 209

PROVIDE 3/8" BORDER BETWEEN PANEL AND BACKGROUND

DETAIL NO.					DETAIL NO.
C- 405	CITY OF CHANDLER STANDARD DETAIL	SIGNAGE	APPROVED: FOR CITY ENGINEER		C-405
NTS			DATE: 11-30-09		PAGE 11 OF 12

ALL EQUIPMENT FURNISHED SHALL BE NEW AND OF CURRENT DESIGN. LIKE EQUIPMENT SHALL BE OF SAME MANUFACTURER.

THE CONTRACTOR SHALL PURCHASE LABOR, MATERIALS,, APPARATUS, APPLIANCES, AND INSTRUMENTATION FROM LOCAL ARIZONA-BASED, AUTHORIZED, FACTORY-TRAINED ENGINEERING REPRESENTATIVES, NOT JUST A STOCKING DISTRIBUTOR. THEY SHALL BE LOCATED WITHIN A 100-MILE RADIUS OF THE PROJECT AND HAVE BEEN IN THE VICINITY FOR A MINIMUM OF 5 YEARS.

DESCRIPTIVE DATA: SUBMIT COPIES OF COMPLETE DESCRIPTIVE LITERATURE, PERFORMANCE DATA, PHYSICAL DIMENSIONS, POWER AND SIGNAL CONNECTIONS FOR EACH COMPONENT AND EQUIPMENT TO BE FURNISHED. PROVIDE NAME OF MANUFACTURER, STYLE, AND COMPLETE MODEL NUMBER. LISTING ITEMS "AS SPECIFIED" WITHOUT BOTH MAKE AND MODEL OR TYPE DESIGNATION IS NOT ACCEPTABLE. SUBSTITUTIONS SHALL NOT BE ALLOWED WITHOUT PRIOR APPROVAL.

COMPONENT DATA SHEETS: SUBMIT A COMPONENT DATA SHEET FOR EACH PIECE OF INSTRUMENTATION EQUIPMENT SIMILAR TO AN ISA S20 FORM. INCLUDE EQUIPMENT TAG NUMBER, MANUFACTURER'S MODEL NUMBER, LOCATION OF SERVICE, MATERIALS OF CONSTRUCTION, SIZE AND SCALE RANGE, CALIBRATED RANGE, SET POINTS, OPTIONAL ACCESSORIES AND ANY OTHER USEFUL INFORMATION.

CONTROL SYSTEM DRAWINGS: SUBMIT 11" X 17" DETAILED SHOP DRAWINGS INDICATING DIMENSIONS, COMPONENT LAYOUT, MOUNTING DETAILS, WIRING DIAGRAMS, NAMEPLATE LEGENDS AND BILL OF MATERIALS FOR EACH CONTROL PANEL.

WIRING DIAGRAMS SHALL INCLUDE ALL INTERCONNECTIONS, INTER-WIRING AND TERMINALS BETWEEN ALL ELECTRICAL AND/OR INSTRUMENTATION UNITS. WIRE NUMBERS SHALL BE CONTINUOUS FROM START TO FINISH. WIRE NUMBERS SHALL NOT CHANGE WHEN GOING FROM ONE UNIT, CABINET, ENCLOSURE, TERMINAL OR ANY DEVICE TO ANOTHER.

THE SPECIFICATIONS REFERENCE KNOWN STANDARDS AND CODES. EACH SUCH STANDARD REFERENCED SHALL BE CONSIDERED A PART OF THE SPECIFICATIONS TO THE SAME EXTENT AS IF REPRODUCED THEREIN IN FULL. THE FOLLOWING IS A REPRESENTATIVE LIST OF SUCH ASSOCIATIONS, INSTITUTES AND SOCIETIES, TOGETHER WITH THE ACRONYM BY WHICH EACH IS IDENTIFIED:

AIEE	AMERICAN INSTITUTE OF ELECTRICAL ENGINEERS	NEC	NATIONAL ELECTRICAL CODE
ANSI	AMERICAN NATIONAL STANDARDS INSTITUTE	NEMA	NATIONAL ELECTRICAL MANUFACTURER'S ASSOCIATION
ASTM	AMERICAN SOCIETY FOR TESTING AND MATERIALS	NETA	NATIONAL ELECTRICAL TESTING ASSOCIATION
ICEA	INSULATED CABLE ENGINEERS ASSOCIATION	NFPA	NATIONAL FIRE PROTECTION ASSOCIATION
IEEE	INSTITUTE OF ELECTRICAL AND ELECTRONIC ENGINEERS	UL	UNDERWRITER'S LABORATORIES, INC.

EVERY REFERENCE IN THE SPECIFICATIONS SHALL MEAN THE LATEST PRINTED EDITION OF EACH IN EFFECT AT THE CONTRACT DATE OR LATEST EDITION AS ADOPTED BY THE LOCAL GOVERNING AUTHORITY.

SYSTEM RESPONSIBILITY INCLUDES BUT IS NOT NECESSARILY LIMITED TO FURNISHING SYSTEM COMPONENTS, SYSTEM INTEGRATION AND DESIGN, WIRING DIAGRAMS, INSTALLATION SUPERVISION, FIELD INSTRUMENT CALIBRATION, STARTUP, TESTING AND OPERATOR TRAINING. THE I&C CONTRACTOR SHALL COORDINATE WITH THE CITY AND THE PROGRAMMER FOR IMPLEMENTING AND TESTING THE PLC PROGRAMS PRIOR TO THE RTU DELIVERY TO THE SITE.

THE I&C CONTRACTOR SHALL BE A REPUTABLE SYSTEM INTEGRATOR AND BE AN UNDERWRITERS LABORATORY (UL) 508A RECOGNIZED PANEL FABRICATOR. THE I & C CONTRACTOR AND PROGRAMMER MUST BE SEPARATE SUBCONTRACTORS TO THE ELECTRICAL CONTRACTOR. THE I&C CONTRACTOR AND THE ELECTRICAL CONTRACTOR SHALL BE LOCATED WITHIN A 100-MILE RADIUS OF THE PROJECT AND HAVE BEEN IN THAT VICINITY FOR A MINIMUM OF FIVE (5) YEARS. THE I&C CONTRACTOR AND THE ELECTRICAL CONTRACTOR CANNOT BE ONE AND THE SAME.

PROGRAMMER SHALL PROVIDE FULL DOCUMENTATION--BOTH PAPER DOCUMENT OF PROCESS DESCRIPTIONS WITH PAGE NUMBERS AND INDEX AND IN-SOFTWARE NETWORKS, CONTACTS, COILS, AND REGISTERS WITH DESCRIPTIONS AT ALL POINTS. THE PROGRAMMING LANGUAGE SHALL BE PROWORX NXT.

THE TURNOUT STRUCTURE MUST BE CAPABLE OF RECEIVING A MINIMUM OF 2,000 GPM THROUGH THE RECEIVING BOX BELOW THE AIR GAP WITHOUT OVERFLOWING.

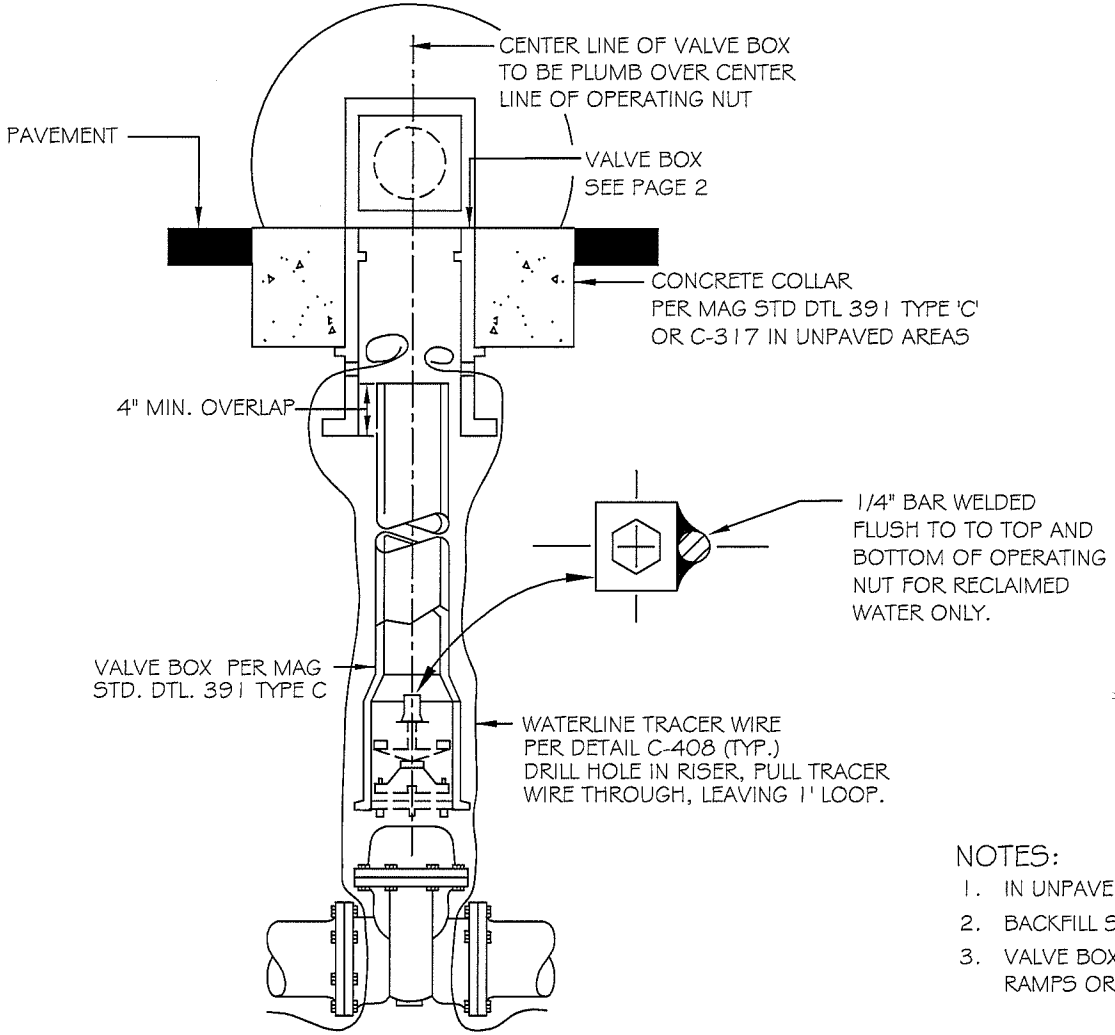

NOTES:

1. IN UNPAVED AREAS, CONCRETE COLLAR SHALL CONFORM TO DETAIL C-317.
2. BACKFILL SHALL BE 1/2 SACK CLSM. PER MAG. SPECIFICATION 718.
3. VALVE BOXES SHALL NOT BE INSTALLED WITHIN CONCRETE GUTTER, SIDEWALK, RAMPS OR VALLEY GUTTER.

DETAIL NO.					
C- 406	CITY OF CHANDLER STANDARD DETAIL	**VALVE BOX INSTALLATION (RECLAIMED WATER)**	APPROVED: CITY ENGINEER		DETAIL NO. **C- 406**
PAGE 1 OF 2			DATE: 07-09-2015		PAGE 1 OF 2

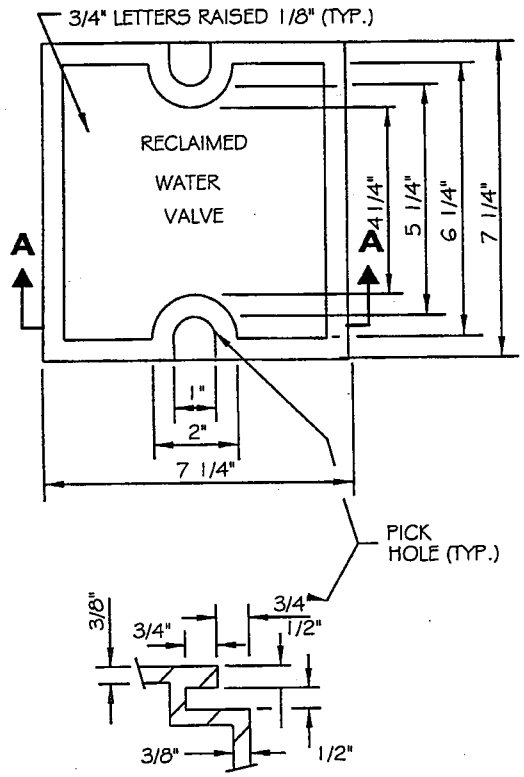

SECTION

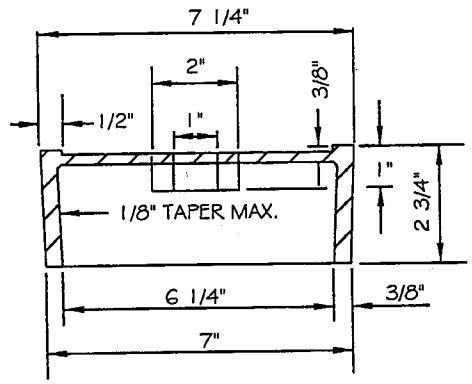

SECTION A - A
COVER

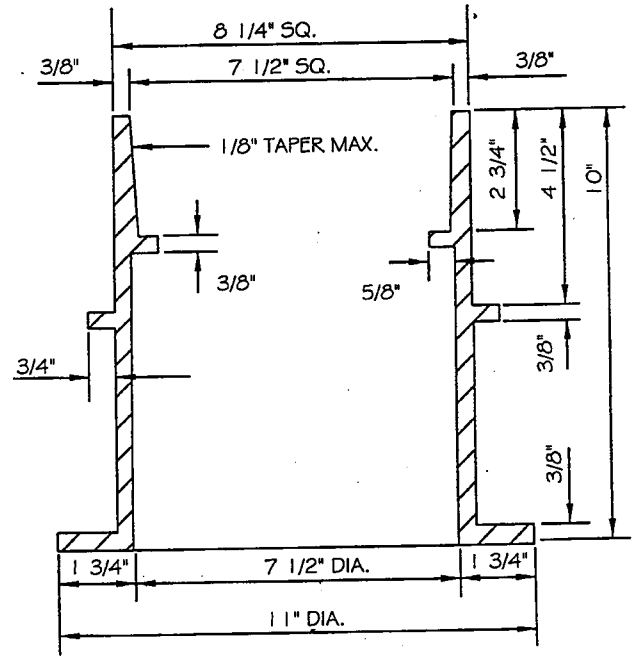

SECTION
VALVE BOX

NOTES:

1. ALL MATERIAL SHALL BE CAST IRON PER ASTM. A-48, CLASS 30 B.
2. THE SURFACES OF THE COVER AND BOX WHICH COME IN CONTACT WITH EACH OTHER MUST BE SMOOTH AND FREE OF ALL CASTING RIDGES AND BURRS TO PROVIDE A SNUG FIT.
3. THE VALVE BOX SHALL HAVE A ROUND BOTTOM TO ACCOMMODATE RISER PIPE. THE TOP OF THE VALVE BOX SHALL BE SQUARE.
4. THE LID AND INSIDE AND OUTSIDE OF THE RISER PIPE SHALL BE COLORED PURPLE. COLOR MAY BE INCORPORATED INTO PIPE DURING MANUFACTURE OR PAINTED ONTO PIPE SURFACE. WHEN PAINTED THE PAINT SHALL BE SEYMOUR SAFETY PURPLE.
5. LETTERING SHALL BE RESTRICTED TO THAT SHOWN ON THE VALVE BOX COVER.

DETAIL NO.					DETAIL NO.
C- 406	CITY OF CHANDLER STANDARD DETAIL	**VALVE BOX INSTALLATION (RECLAIMED WATER)**	APPROVED: CITY ENGINEER DATE: 11-19-99		C- 406 PAGE 2 OF 2

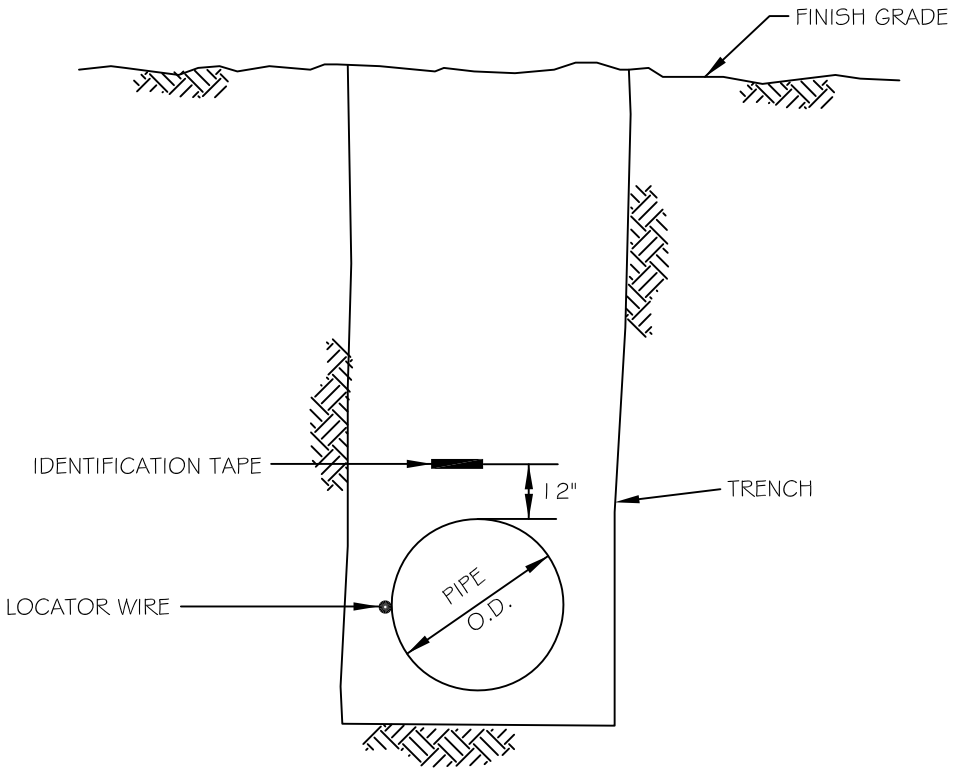

NOTES:

1. I.D. TAPE AND LOCATOR WIRE SHALL BE INSTALLED ON PUBLIC DISTRIBUTION AND COLLECTION MAINS FOR ALL PIPE MATERIALS AND SIZES 4" AND LARGER.
2. I.D. TAPE AND MARKINGS SHALL BE PER MAG STD. SPEC. SEC. 616.4, EXCEPT AS MODIFIED HEREON.
3. LOCATOR WIRE SHALL BE AWG #14 THWN COPPER WIRE, TAPED TO PIPE EVERY 8-10 FEET.
4. LOCATOR WIRE SHALL ORIGINATE/ TERMINATE AT VALVE BOXES AND MANHOLES AND BE SECURED TO VALVE BOX OR MANHOLE NO MORE THAN 12" BELOW COVER.
5. LOCATOR WIRE SHALL BE VERIFIED FOR ELECTRICAL CONTINUITY ALONG THE ENTIRE LENGTH.

IDENTIFICATION TAPE & WIRE COLOR AND MARKING SCHEDULE

PIPELINE USE	COLOR	PRINTED MESSAGE
RECLAIMED WATER	MAG SPEC SEC 616.4	MAG SPEC SEC 616.4
POTABLE WATER	SOLID COLUMBIA BLUE	CAUTION POTABLE WATER LINE
SEWER	GREEN	CAUTION: SANITARY SEWER

C-408	CITY OF CHANDLER STANDARD DETAIL	PIPE LOCATOR WIRE & I.D. TAPE	APPROVED: CITY ENGINEER DATE: 01-09-2020	DETAIL NO. C-408 NTS

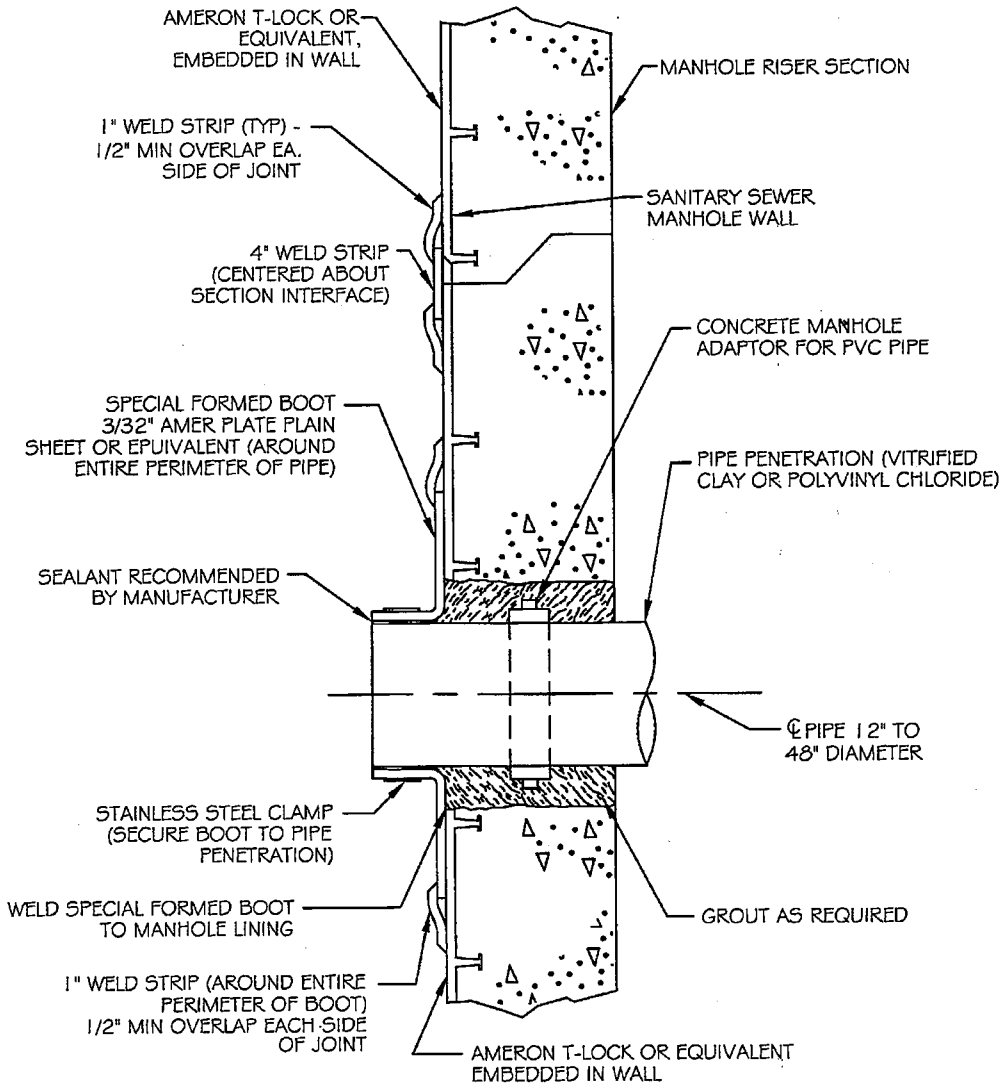

PIPE PENETRATION DETAIL

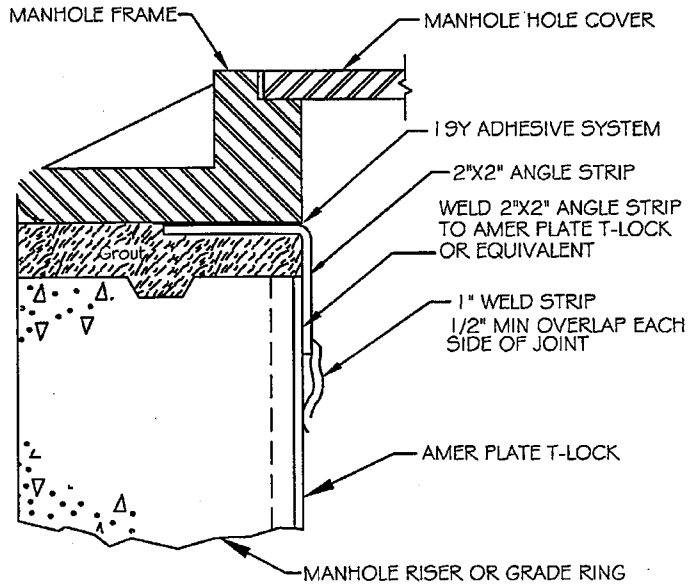

NOTE:
2" X 2" ANGLE STRIP TO BE ATTACHED TO MANHOLE FRAME USING 19Y ADHESIVE PRIOR TO SETTING FRAME.

MANHOLE FRAME TERMINATION DETAIL

NOTE:
ALL FIELD JOINTS FOR T-LOCK LINED MANHOLE SECTIONS SHALL BE TYPE P-1 JOINTS WITH 4" WELD STRIP WITH 2-1" WELD STRIPS SECURING THE JOINT STRIP IN PLACE.

DETAIL NO.					DETAIL NO.
C-409 NTS	CITY OF CHANDLER STANDARD DETAIL	**PIPE PENETRATION AND MANHOLE FRAME TERMINATION DETAIL**	APPROVED: CITY ENGINEER DATE: 01/08/09		**C-409** NTS

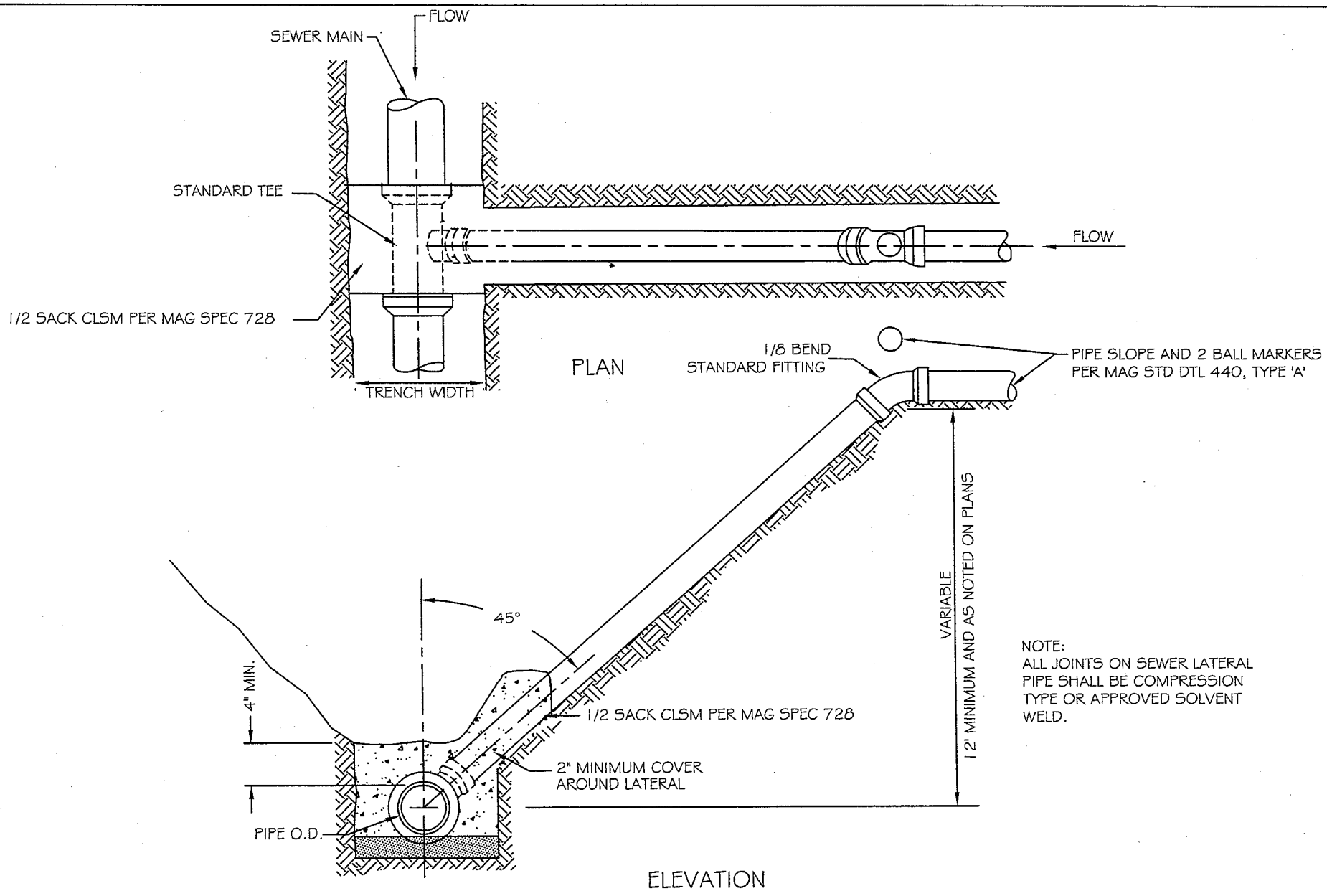

NOTE:
ALL JOINTS ON SEWER LATERAL PIPE SHALL BE COMPRESSION TYPE OR APPROVED SOLVENT WELD.

DETAIL NO.					
C-410	CITY OF CHANDLER STANDARD DETAIL	**DEEP CUT SEWER CONNECTION (SEWER LATERAL)**	APPROVED: CITY ENGINEER	DETAIL NO.	
NTS			DATE: 01/14/10	**C-410**	
				NTS	

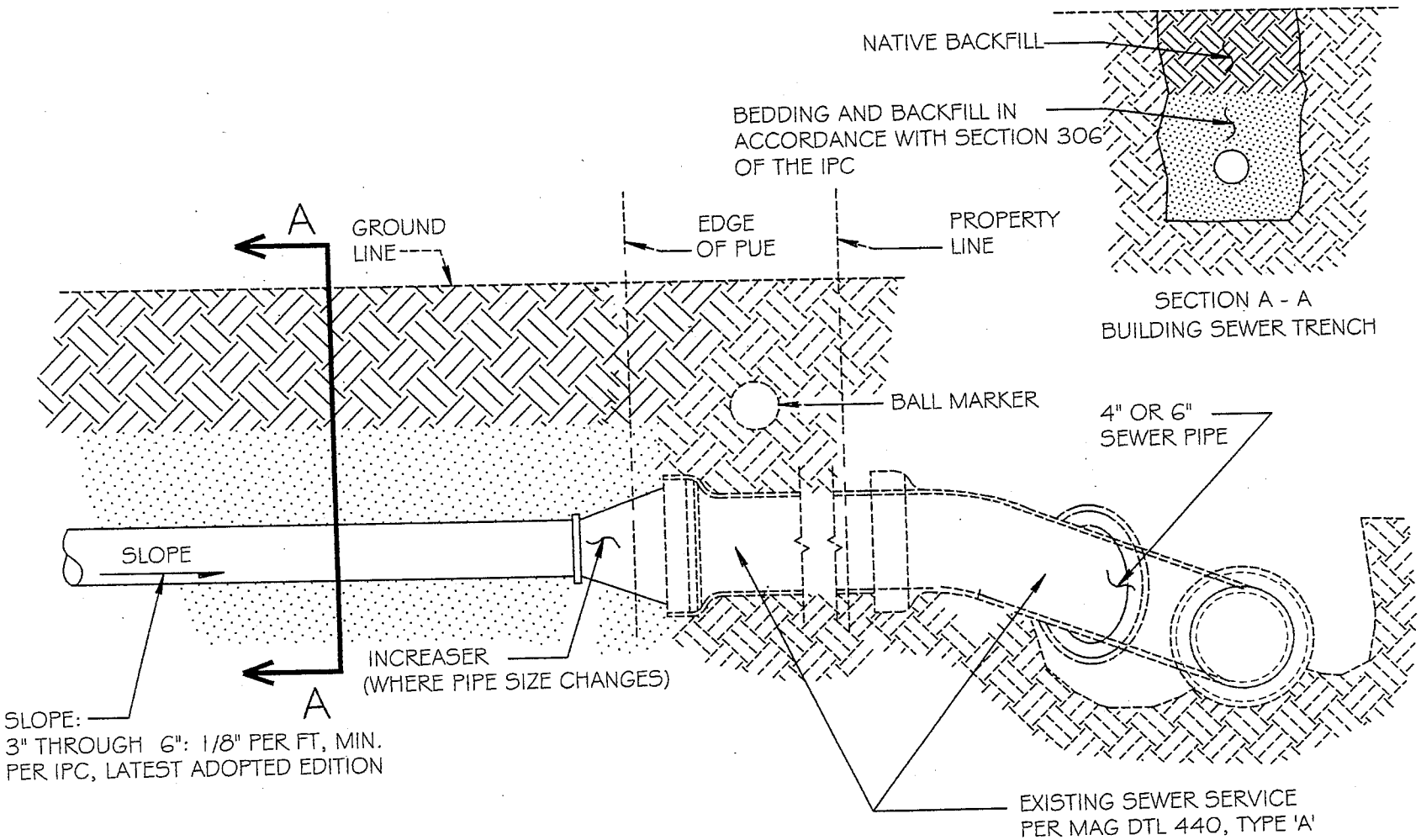

NOTES:

1. ALL CONSTRUCTION SHALL BE IN ACCORDANCE WITH THE INTERNATIONAL PLUMBING CODE (IPC), LATEST ADOPTED EDITION.
2. NO PIPE SHALL BE BACKFILLED UNTIL THE LINE HAS BEEN INSPECTED AND APPROVED BY THE DEVELOPMENT INSPECTOR.

DETAIL NO. **C-411** NTS	CITY OF CHANDLER STANDARD DETAIL	**BUILDING SEWER CONNECTION**	APPROVED: CITY ENGINEER DATE: 01/14/10	DETAIL NO. **C-411** NTS

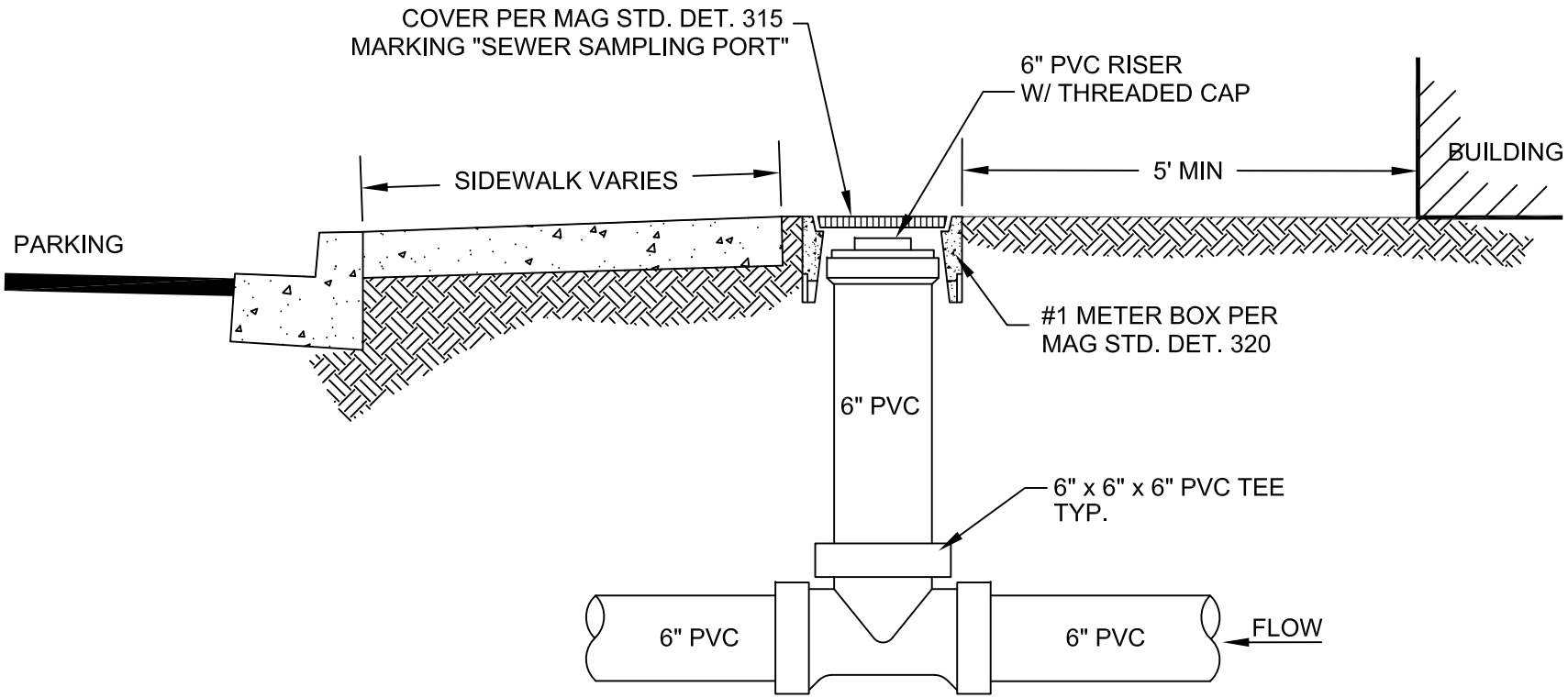

NOTES:

1. CONSTRUCTION SHALL MEET INTERNATIONAL PLUMBING CODE REQUIREMENTS.

DETAIL NO.					DETAIL NO.
C-412	CITY OF CHANDLER STANDARD DETAIL	**6" SEWER SAMPLING PORT**	APPROVED: CITY ENGINEER		**C-412**
NTS			DATE: 05-10-2018		NTS

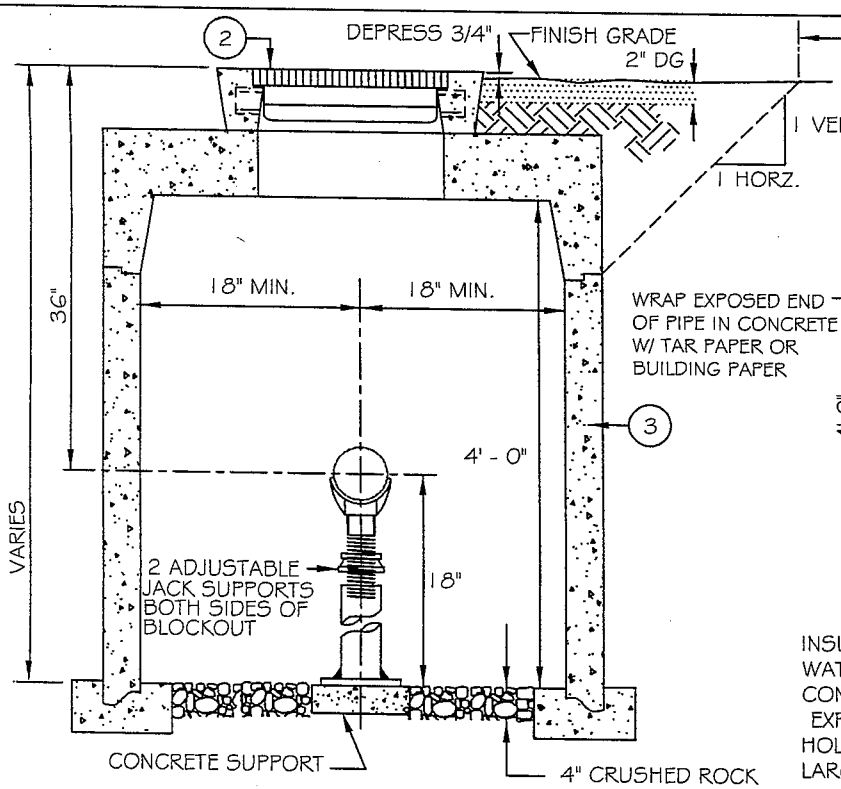

SECTION A-A

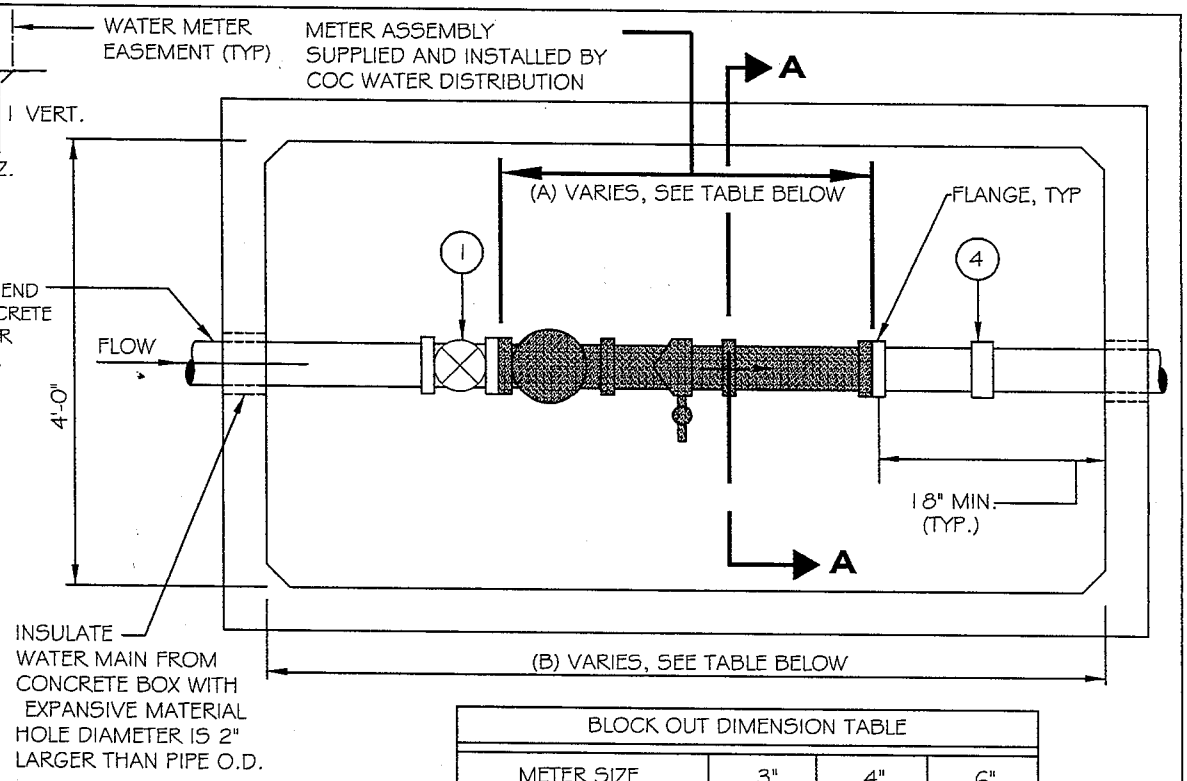

BLOCK OUT DIMENSION TABLE			
METER SIZE	3"	4"	6"
METER ASSEMBLY (A) BLOCK OUT	1'- 6-3/4"	1'- 10-1/4"	2'- 3-3/4"
VAULT LENGTH (B)	4' - 8"	5' - 0"	5' - 6"

NOTES:

1. METER VAULTS MAY BE EITHER CAST-IN-PLACE OR PRE-CAST CONCRETE. SEE MAG STANDARD DETAIL 321 FOR VAULT CONSTRUCTION.
2. STAINLESS BOLTS AND NUTS REQUIRED FOR ENTIRE ASSEMBLY.
3. PIPE MAIN SHALL BE FULLY RESTRAINED BEYOND INLET AND OUTLET OF VAULT.
4. CONTRACTOR SHALL PROVIDE FLANGED SPOOL IN METER ASSEMBLY BLOCK-OUT TO PROVE CORRECT ALIGNMENT. SPOOL MAY BE SALVAGED AFTER METER INSTALLATION.
5. VAULT LID SHALL NOT BE INSTALLED UNTIL AFTER METER IS INSTALLED BY CITY. CALL (480) 782-3700.
6. CONTRACTOR SHALL DRILL 1-3/4" DIAMETER HOLE IN CENTER OF HATCH.

LEGEND:

1. O.S. & Y. GATE VALVE, FLANGED WITH HAND WHEEL OPEN LEFT, AND RISING STEM.
2. METER HATCH PER SYRACUSE CASTINGS "CH-AL" STYLE PEDESTRIAN RATED ALUMINUM WITH SLAM LOCK OR APPROVED EQUAL. CH-5AL 42" X 42"
3. METER VAULT PER UTILITY VAULT COC STANDARD DETAIL OR APPROVED EQUAL.
4. PROVIDE 1" TO 1-1/2" OF PLAY IN THE FLEX COUPLING - CAULDER OR EQUAL.

DETAIL NO. C-416 NTS	CITY OF CHANDLER STANDARD DETAIL	3" THROUGH 6" RECLAIMED WATER METER VAULT	APPROVED: CITY ENGINEER DATE: 01-27-11	DETAIL NO. C-416 NTS

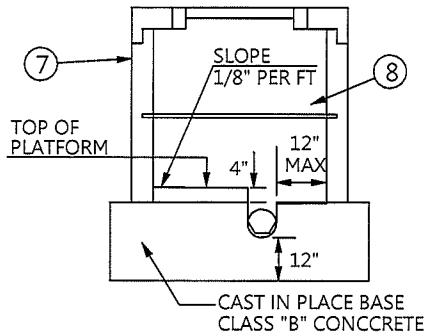

SECTION

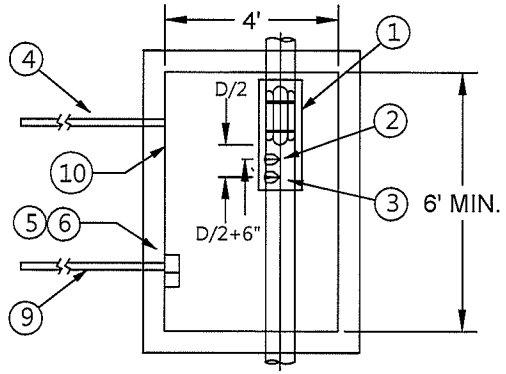

PLAN VIEW WITH COVER REMOVED

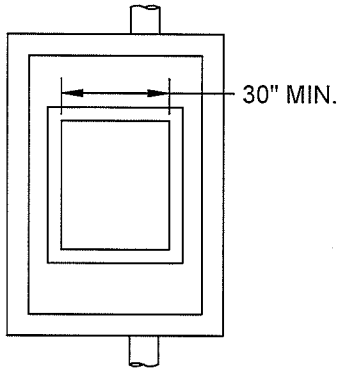

TOP VIEW

CONSTRUCTION NOTES

1. FLUME INSERT (IF REQUIRED).
2. 1/4" 316 SST BUBBLE PIPE IN RECESS.
3. 3/8" 316 SST SAMPLE PIPE IN RECESS.
4. 2" SCH 40 PVC CONDUIT (FOR SAMPLE AND BUBBLE TUBING) WITH THREADED FITTING AND CAP - SEE DETAIL C-417 (PAGE 2) FOR CONTINUATION
5. 120 VAC JUNCTION BOX (EXPLOSION PROOF)-TO BE INSTALLED WITH FLUME.
6. JUNCTION BOX WITH APHENOL CONNECTOR FOR 4-20 MA OUTPUT OR PULSE OUTPUT - TO BE INSTALLED WITH FLUME.
7. PRECAST CONCRETE VAULT AND COVER. ALL VAULTS EXCEEDING HEIGHT OF 5 FEET SHALL BE DESIGNED BY THE APPROPRIATE DESIGN PROFESSIONAL(S).
8. INSTALL 3/4" DIA. 316 SST BAR 24" ABOVE TOP OF PLATFORM AT LOCATION RECOMMENDED BY MANUFACTURER - TO BE WITH FLUME.
9. PROVIDE CONDUIT AND PULL WIRE FOR FUTURE 120 VAC - 30 AMP SERVICE (SEE DETAIL C-417 (PAGE 2) FOR CONTINUATION.
10. INSIDE OF VAULT AND CONCRETE BASE SHALL BE SPRAYED WITH A CITY APPROVED RESIN.

NOTES

1. MINIMUM INSIDE DIMENSIONS OF VAULT SHALL BE 48 INCHES WIDE BY 72 INCHES LONG WITH A MINIMUM HEIGHT OF 42" FROM THE TOP OF THE PLATFORM. ANY MODIFICATIONS TO THESE REQUIREMENTS WILL NEED TO BE REVIEWED AND APPROVED BY COC.
2. ACCESS TO THE VAULT SHALL BE BY A BILCO-STYLE DOOR WITH AN INSIDE OPENING OF AT LEAST 30 INCHES. LOAD SPECIFICATION WILL DEPEND ON INSTALLATION.
3. THE SEWER UPSTREAM OF THE VAULT SHALL BE STRAIGHT FOR LENGTH UPSTREAM OF THE VAULT EQUAL TO AT LEAST 25 PIPE DIAMETERS AND SLOPE OF UPSTREAM SEWER SHALL NOT EXCEED 1%.
4. THE TOP OF THE VAULT SHALL BE BETWEEEN 3 AND 12 INCHES ABOVE FINISHED GRADE.
5. THE HEIGHT OF THE VAULT SHALL NOT EXCEED 18 FEET.
6. THE ELECTRICAL JUNCTION BOX REQUIRES A CITY PERMIT BEFORE CONSTRUCTION BEGINS.

DETAIL NO.					
C-417	CITY OF CHANDLER STANDARD DETAIL	**INDUSTRIAL MONITORING VAULT DETAILS**	APPROVED: CITY ENGINEER	DETAIL NO. **C-417**
NTS			DATE: 07-09-2015	PAGE 1 OF 2

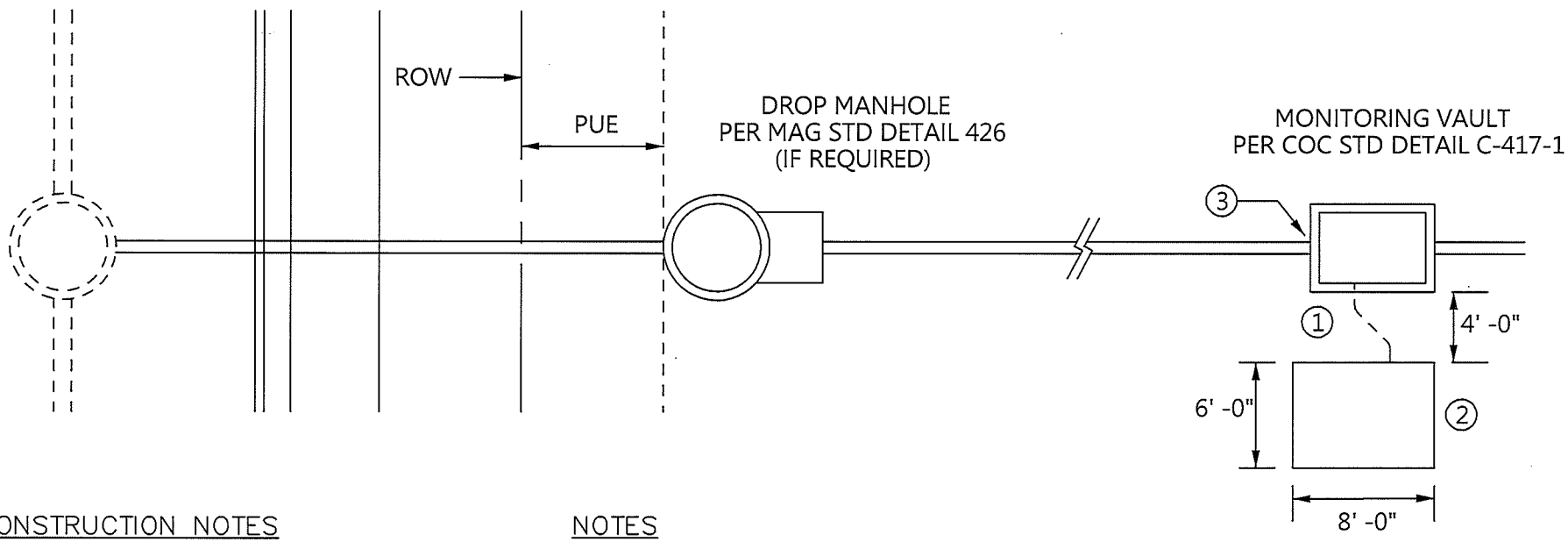

CONSTRUCTION NOTES

1. PROVIDE CONDUIT WITH PULL WIRES FOR FUTURE 120 VAC 30 AMP SERVICE FROM VAULT TO SLAB.

2. PROVIDE 4" THK CONCRETE PAD.

3, PROVIDE MINIMUM OF 1 INCH DROP AT THE DOWNSTREAM END OF THE VAULT.

NOTES

1. PROVIDE CONDUIT AND PULL WIRES TO CONCRETE PAD FOR FUTURE 120 VAC 30 AMP SERVICE.

2. DISTANCE FROM TOP OF VAULT TO TOP OF CONCRETE PLATFORM SHALL BE 5 FT. OR LESS UNLESS OTHERWISE APPROVED BY COC STAFF.

3. COORDINATE SITE PLAN WITH COC PRETREATMENT MONITORING STAFF.

4. TERMINATE ALL CONDUIT WITH AIR TIGHT SERVICE CAPS ABOVE FINISHED GRADE.

DETAIL NO.					DETAIL NO.
C-417	CITY OF CHANDLER STANDARD DETAIL	**INDUSTRIAL MONITORING VAULT SITE PLAN**	APPROVED: CITY ENGINEER		**C-417**
NTS			DATE: 1-9-14.		PAGE 2 OF 2