SIGNAGE
C-600 TO C-623

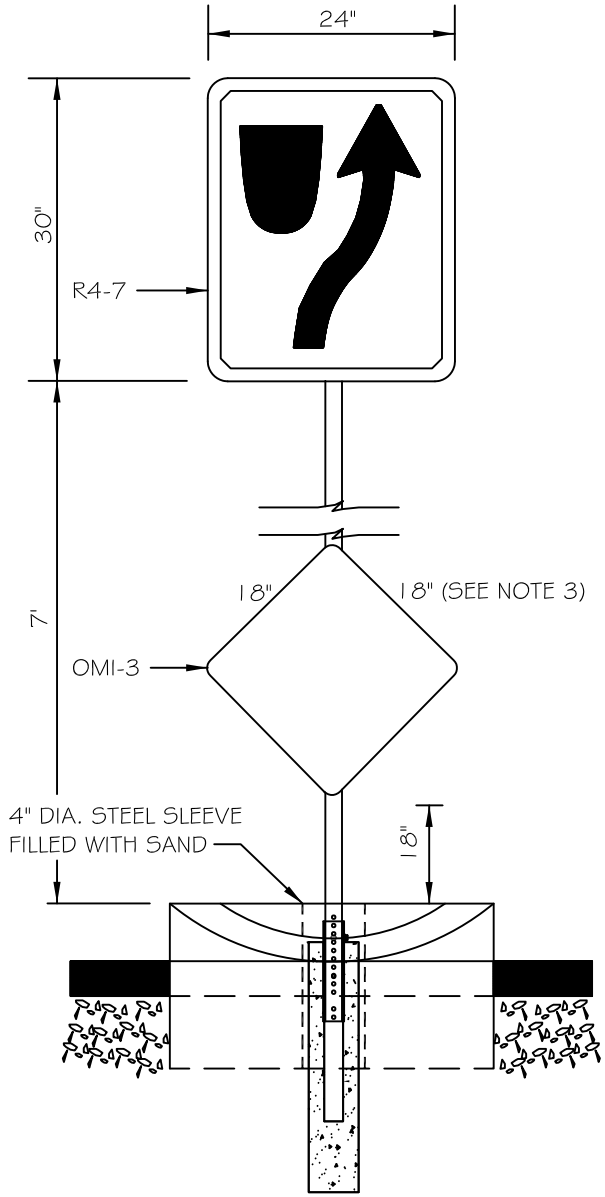

ARTERIAL INTERSECTIONS

NOTES:

1. SIGNS SHALL BE INSTALLED 6' BACK OF FACE OF BULLNOSE ON MEDIANS 4' IN WIDTH OR LESS AND 10' BACK ON MEDIAN WIDTHS GREATER THAN 4'.
2. MUTCD R4-7 AND OBJECT MARKER SIGNS SHALL BE INSTALLED AT ALL ARTERIAL / ARTERIAL INTERSECTIONS.
3. FOR MEDIANS LESS THAN 3' IN WIDTH, USE 12" X 12" OBJECT MARKER.
4. USE SAME POST SECTION, SIGN MOUNTING AND ANCHOR ASSEMBLY AS SHOWN ON COC STANDARD DETAIL C-613.
5. SEE COC STANDARD DETAIL C-225 FOR BULLNOSE REQUIREMENTS.

DETAIL NO.					DETAIL NO.
C-600	CITY OF CHANDLER STANDARD DETAIL	**MEDIAN SIGNAGE**	APPROVED: CITY ENGINEER		**C-600**
NTS			DATE: 05-10-2018		NTS

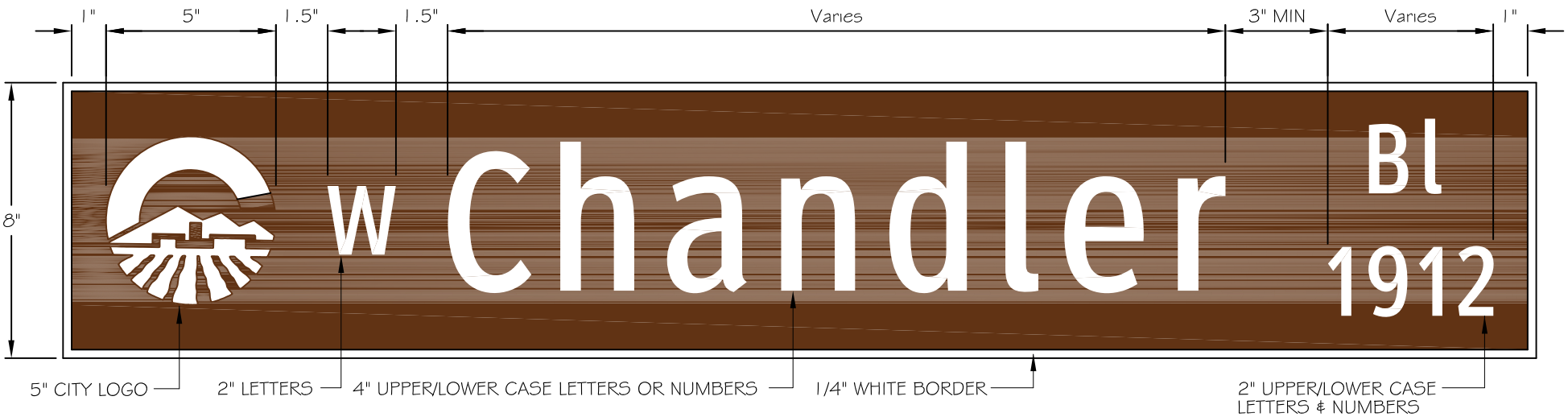

BLANKS - 8" FLAT 0.125" THICK ALUMINUM BLADES
8" x 27" to 8" x 48" AS REQUIRED.
CUT LENGTH TO FIT.

BACKGROUND - 3M WHITE HIGH INTENSITY PRISMATIC SHEETING SERIES 3930 COVERED WITH 3M BROWN ELECTRO CUT FILM SERIES 1179C

4" LETTERS - ClearviewHwy® 2-W Font*
2" LETTERS - ClearviewHwy® 2-W Font*

* WHERE LENGTH EXCEEDS 48", USE 1-W FONT. WHERE LENGTH STILL EXCEEDS 48", CONTACT CITY FOR PROPER ABBREVIATIONS.

DETAIL NO.					DETAIL NO.
C-601	CITY OF CHANDLER STANDARD DETAIL	**STREET NAME SIGNS (FOR PUBLIC STREETS)**	APPROVED: CITY ENGINEER		**C-601**
PAGE 1 OF 2			DATE: 05-10-2018		PAGE 1 OF 2

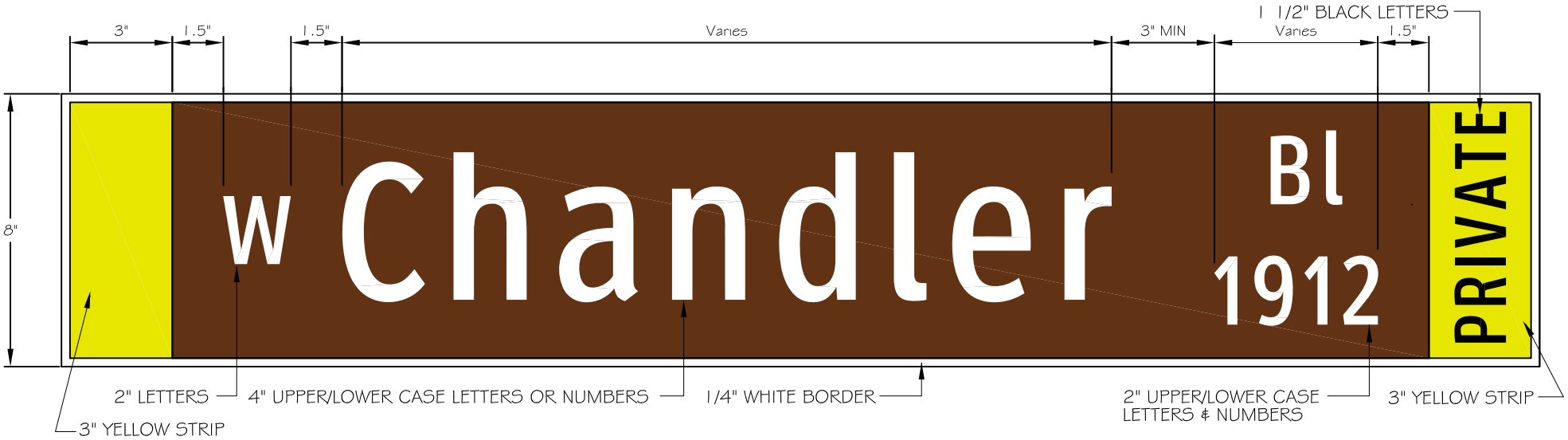

BLANKS - 8" FLAT 0.125" THICK ALUMINUM BLADES
8" x 27" to 8" x 48" AS REQUIRED.
CUT LENGTH TO FIT.

BACKGROUND - 3M WHITE HIGH INTENSITY PRISMATIC SHEETING SERIES 3930 COVERED WITH 3M BROWN ELECTRO CUT FILM SERIES 1179C

4" LETTERS - ClearviewHwy® 2-W Font*
2" LETTERS - ClearviewHwy® 2-W Font*
1 1/2" LETTERS - ClearviewHwy® 2-W Font

* WHERE LENGTH EXCEEDS 48", USE 1-W FONT. WHERE LENGTH STILL EXCEEDS 48", CONTACT CITY FOR PROPER ABBREVIATIONS.

DETAIL NO.					DETAIL NO.
C-601	CITY OF CHANDLER STANDARD DETAIL	**STREET NAME SIGNS (FOR PRIVATE STREETS)**	APPROVED: CITY ENGINEER		**C-601**
PAGE 2 OF 2			DATE: 05-10-2018		PAGE 2 OF 2

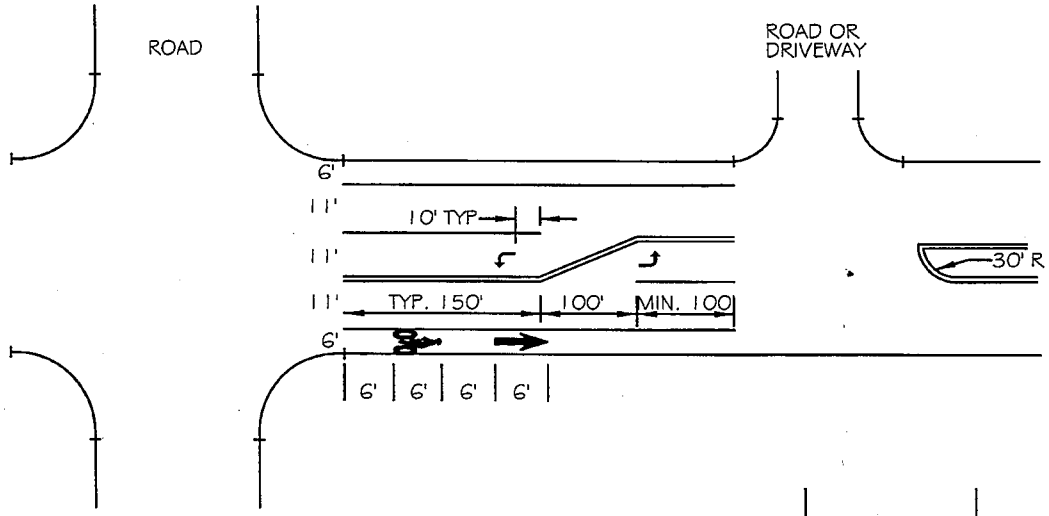

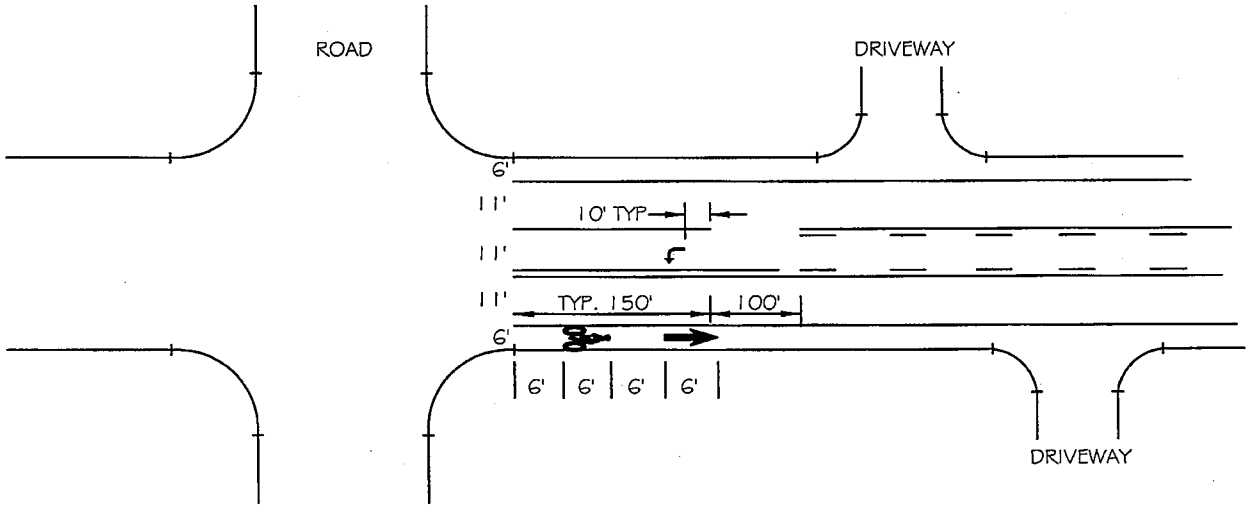

NOTES:

1. ALL DIMENSIONS TO BACK OF CURB.
2. DO NOT INSTALL REFLECTORS ON COLLECTOR ROADS.
3. INSTALL BIKE SYMBOL AND ARROW DOWNSTREAM FROM ALL INTERSECTIONS.
4. BREAK TWO-WAY LEFT TURN PAVEMENT MARKINGS FOR INTERSECTIONS. DO NOT BREAK FOR DRIVEWAYS.

DETAIL NO.				DETAIL NO.
C-602 NTS	CITY OF CHANDLER STANDARD DETAIL	**COLLECTOR ROAD PAVEMENT MARKINGS**	APPROVED: Elizabeth M. [signature] CITY ENGINEER DATE: January 21, 2002	**C-602** NTS

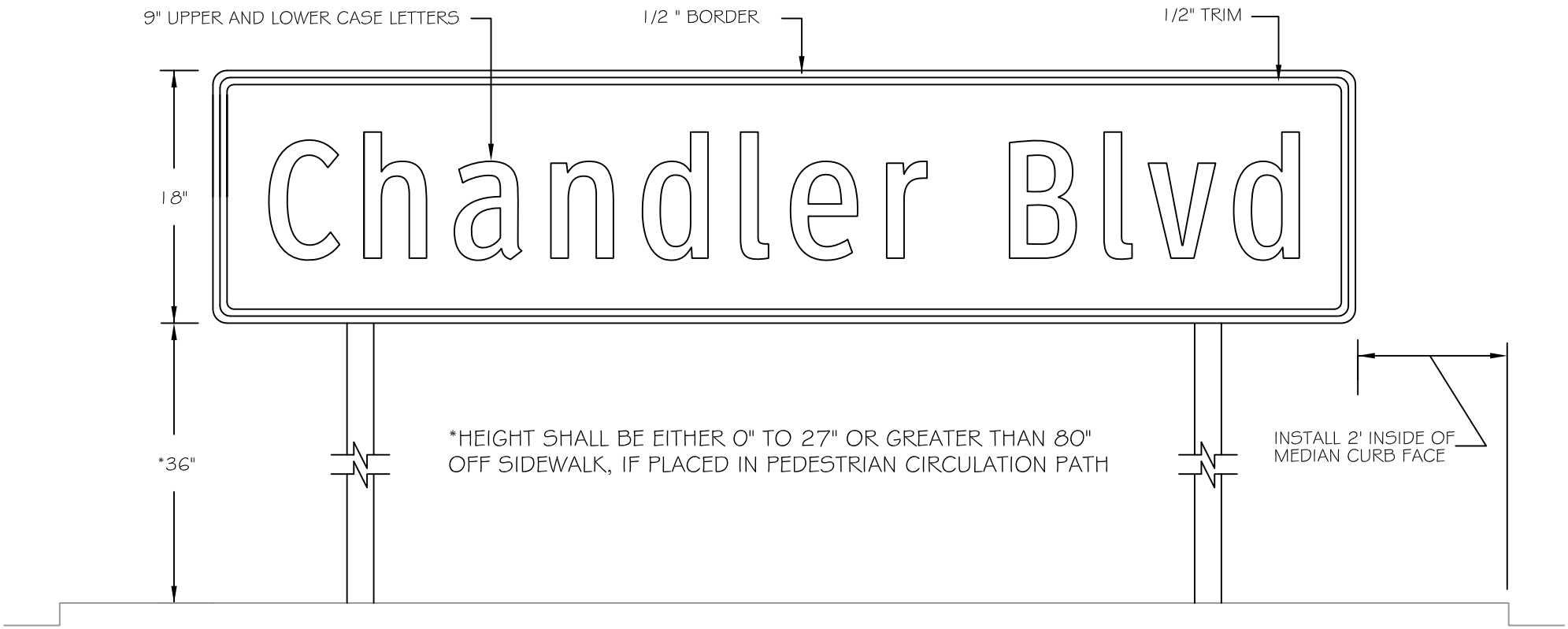

BLANKS - 18" ALUMINUM BLADES
18" x 48" to 18" x 120" AS REQUIRED

9" LETTERS/NUMBERS - ClearviewHwy® 2-W Font

BACKGROUND - 3M WHITE HIGH INTENSITY PRISMATIC SHEETING SERIES 3930 COVERED WITH 3M BROWN ELECTRO CUT FILM SERIES 1179C

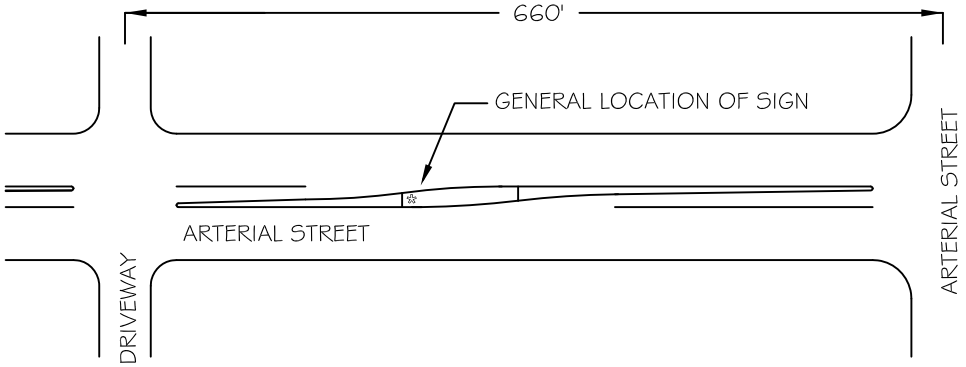

DETAIL NO.					DETAIL NO.
C-603	CITY OF CHANDLER STANDARD DETAIL	**ADVANCED STREET NAME SIGNS**	APPROVED: CITY ENGINEER		**C-603**
NTS			DATE: 05-10-2018		NTS

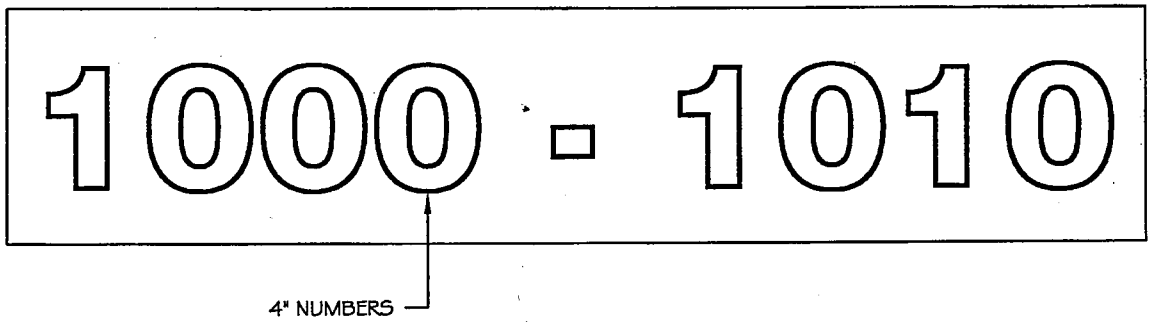

BLANKS - EXTRUDED ALUMINUM BLADES
MIN. 6" x 18" MAX. 6" x 48" AS REQUIRED
HS-1 OR VSS-1 EXTRUSION

BACKGROUND - 3M BROWN REFLECTIVE SHEETING,
HIGH INTENSITY GRADE, CODE NO. 2279 S/L

4" NUMBERS - 3M (PARKWAY WHITE) SERIES 'C'
HIGH INTENSITY GRADE

C-604 **REPLACES** **113B**	CITY OF CHANDLER STANDARD DETAIL	**ADDRESS IDENTIFICATION FOR CLUSTER DEVELOPMENTS**	APPROVED: Roger D. Patterson CITY ENGINEER DATE: 11-19-99	DETAIL NO. **C-604** NTS

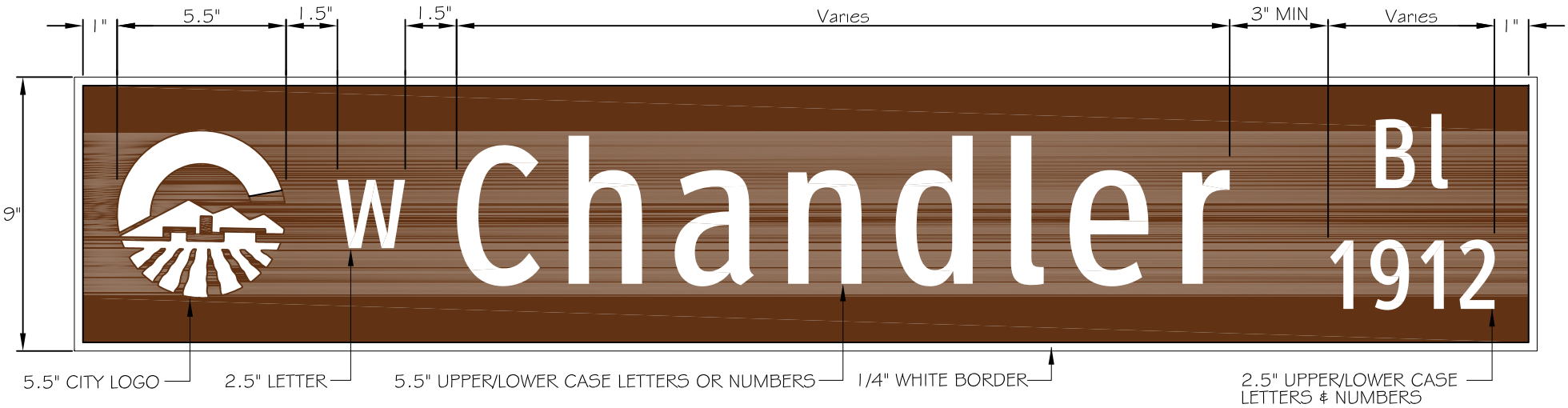

BLANKS - 9" ALUMINUM BLADES
9" x 36" to 9" x 78" AS REQUIRED

BACKGROUND - 3M WHITE HIGH INTENSITY PRISMATIC SHEETING SERIES 3930 COVERED WITH 3M BROWN ELECTRO CUT FILM SERIES 1179C

5 1/2" LETTERS - ClearviewHwy® 2-W Font
2 1/2" LETTERS - ClearviewHwy® 2-W Font

CITY LOGO - 5.5" WHITE, PRESSURE SENSITIVE, 3M HIGH INTENSITY PRISMATIC SHEETING SERIES 3930

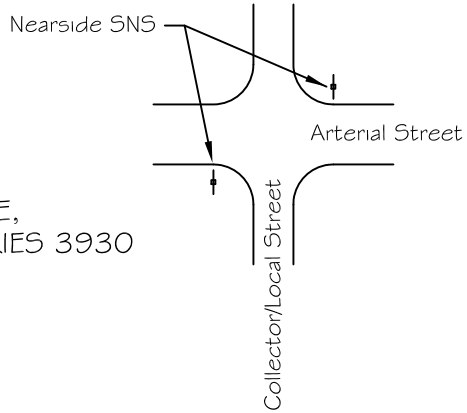

DETAIL NO. C-605 PAGE 1 OF 2	CITY OF CHANDLER STANDARD DETAIL	**NEARSIDE STREET NAME SIGNS (FOR PUBLIC STREETS)**	APPROVED: CITY ENGINEER DATE: 05-10-2018	DETAIL NO. C-605 PAGE 1 OF 2

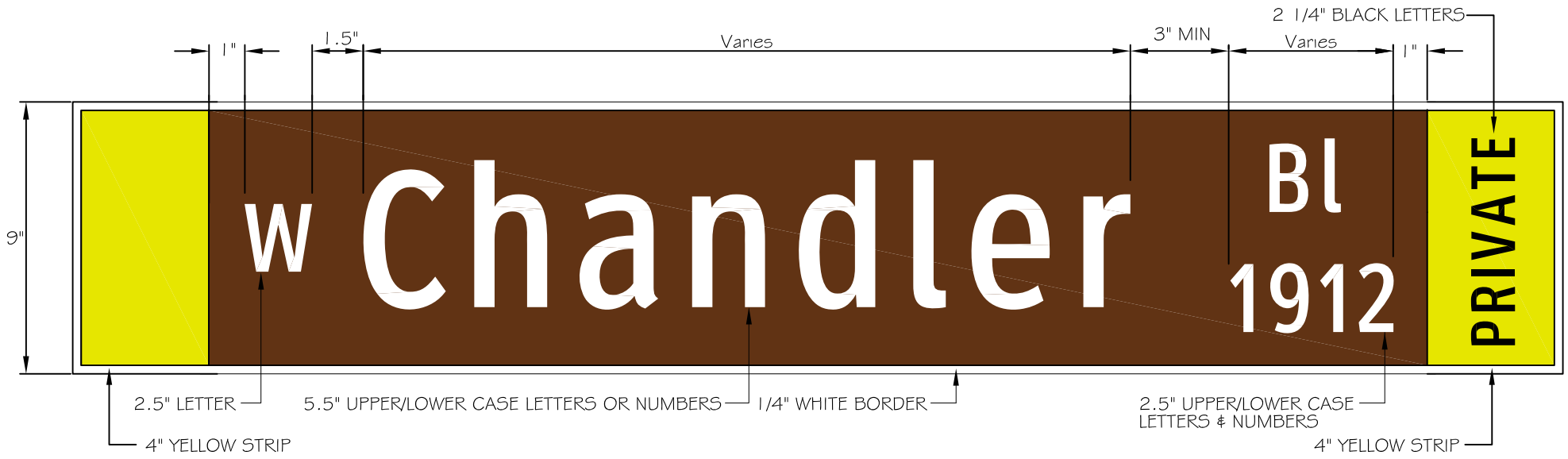

BLANKS - 9" ALUMINUM BLADES
9" x 36" to 9" x 78" AS REQUIRED

BACKGROUND - 3M WHITE HIGH INTENSITY PRISMATIC SHEETING SERIES 3930 COVERED WITH 3M BROWN ELECTRO CUT FILM SERIES 1179C

5 1/2" LETTERS - ClearviewHwy® 2-W Font
2 1/2" LETTERS - ClearviewHwy® 2-W Font
2 1/4" LETTERS - ClearviewHwy® 2-W Font

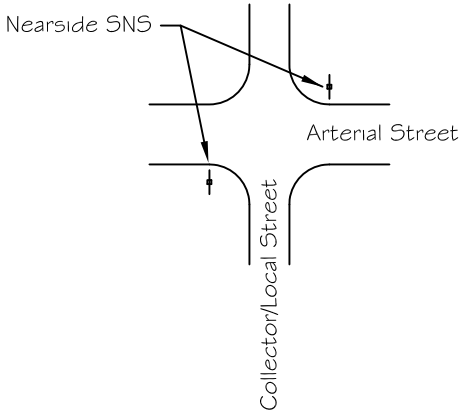

DETAIL NO. C-605 PAGE 2 OF 2	CITY OF CHANDLER STANDARD DETAIL	NEARSIDE STREET NAME SIGNS (FOR PRIVATE STREETS)	APPROVED: CITY ENGINEER DATE: 05-10-2018	DETAIL NO. C-605 PAGE 2 OF 2

OPPOSITE FACE

MOUNTING BRACKET IS ON THIS SIDE OF SIGN CABINET

F96T12CW/HO LAMPS
51-792R SIGN BALLAST
BI-PIN LAMP SOCKETS OPERATED BY PHOTOCELL ON POWER METER PEDESTAL;
SAME CIRCUIT AS STREETLIGHTS ON SIGNAL POLES

1/2 SPACE SEPARATION BETWEEN NUMBER AND LETTER (TYP)

6" ARROWS (TYP) ALL SIGNS (TIP TO TIP)

8'-1/8"

4" | 10-1/2" DIA | 2"

1-1/2" SPACE

5-1/2" TO CENTER OF ARROW

4-1/2" | 10-1/2" DIA | 1-1/2" | 9" | 4-1/2" = 30"

6-1/2"
4"

STANDARD SPACING FOR ADDRESS NUMERALS

4-1/2"
4-1/2"

MOUNTING BRACKET IS ON THIS SIDE OF SIGN CABINET

EQUAL | EQUAL

1-1/2" RETAINERS (TYP.)

TO BE CENTERED WITHIN THIS AREA EXCEPT WHEN THE AMOUNT OF CHARACTERS EXCEEDS THE ALLOWABLE SPACE. SPACING HAS BEEN INCREASED BY 70% WHEN ALLOWABLE.

CABINET: EXTRUDED ALUMINUM 12" DEEP PRIMED AND PAINTED M.A.P. #41-342 BRUSHED ALUMINUM, SATIN FINISH. INCLUDE HINGED FACE WITH PROP ROD FOR SERVICE. RETAINERS PRIMED AND PAINTED SIMILARLY.

FACES: 3/16" THICK FLAT WHITE POLYCARBONATE SHEET WITH 1ST SURFACE APPLIED VINYL AS FOLLOWS:
ENTIRE BACKGROUND: #230-59 DARK BROWN
SKY SEMI-CIRCLE SHAPE: #230-35 DARK BLUE
MOUNTAINS: #230-61 SLATE GREY
FURROWS: #230-49 BURGUNDY
ALL TEXT AND CIRCULAR BACKGROUND FOR THE LOGO ARE WHITE POLYCARBONATE FACES SHOWING THROUGH.

TYPESTYLE: HELVETICA FONT & LOWERCASE STD. SPACING FOR THE ADDRESS NUMERALS AND OPENED-UP SPACING FOR THE ST. NAMES IF ALLOWABLE

ILLUMINATION: FLUORESCENT INTERNAL 800 M.A. AS REQUIRED.

DETAIL NO.					DETAIL NO.
C-606	CITY OF CHANDLER STANDARD DETAIL	**INTERNALLY ILLUMINATED STREET NAME SIGN**	APPROVED: CITY ENGINEER		**C-606**
NTS			DATE: 01-09-2020		NTS

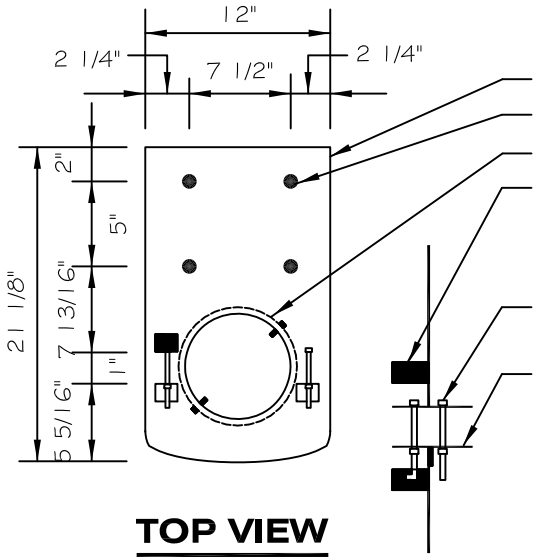

3/8" THICK STEEL PLATE, PAINTED BRUSHED ALUMINUM

3/4" DIA. X 1" SLOTTED HOLES (4 REQD.)

EXISTING SIGNAL STRUCTURE PIPE, 8 5/8" DIA.

1/4" THICK TAB, 1 1/2"X2" DRILLED AND TAPPED TO RECEIVE A 3/8" X 1-1/2" LONG BOLT. TAB TO BE WELDED TO PLATE (2 TYP)

1/2" PLATED BOLT 4" LONG WITH STEEL NUT WELDED TO FLANGE OF PLATE

ANGLE CLIPS 2"X2", 1 1/2" WIDE WELDED TO PLATE TOP AND BOTTOM

TOP VIEW

CHANDLER EXTENSION POLE

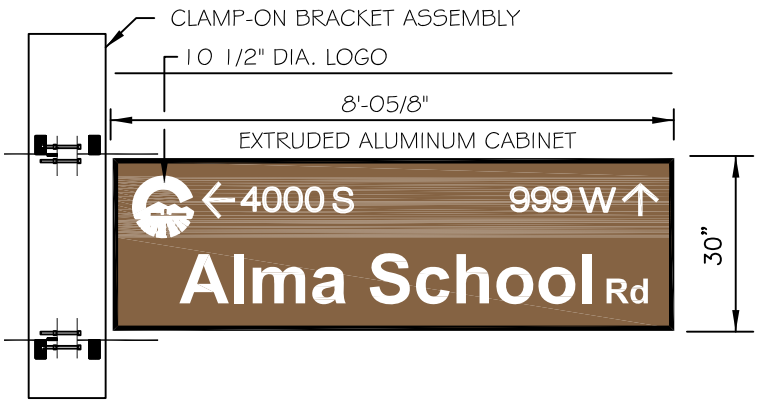

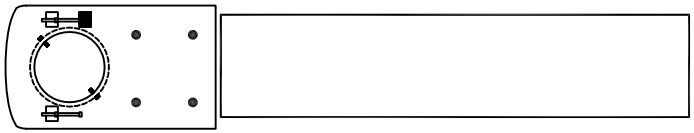

TOP VIEW

FRONT AND FACE DETAIL

DETAIL NO. **C-607** NTS	CITY OF CHANDLER STANDARD DETAIL	**INTERNALLY ILLUMINATED STREET NAME SIGN - BRACKET ASSEMBLY**	APPROVED: CITY ENGINEER DATE: 01-09-2020	DETAIL NO. **C-607** NTS

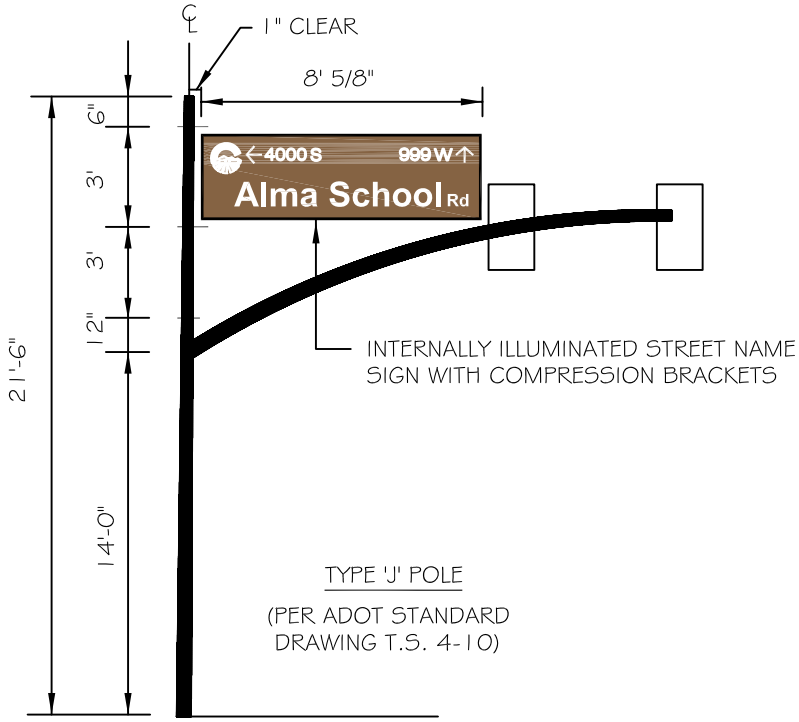

ELEVATION

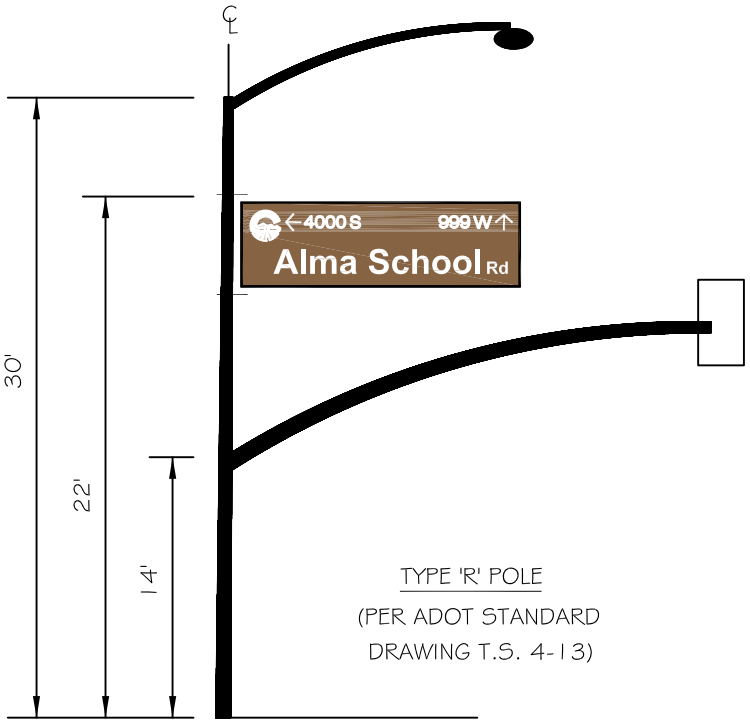

ELEVATION

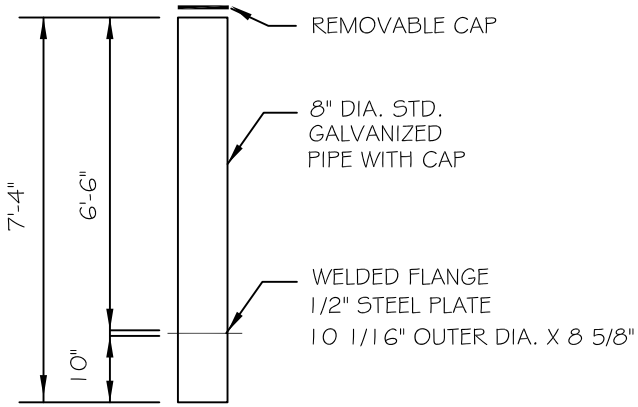

EXTENSION BRACKET DETAIL

DETAIL NO.					DETAIL NO.
C-608	CITY OF CHANDLER STANDARD DETAIL	**INTERNALLY ILLUMINATED STREET NAME SIGN - J/R POLE MOUNTING**	APPROVED: CITY ENGINEER		**C-608**
NTS			DATE: 01-09-2020		NTS

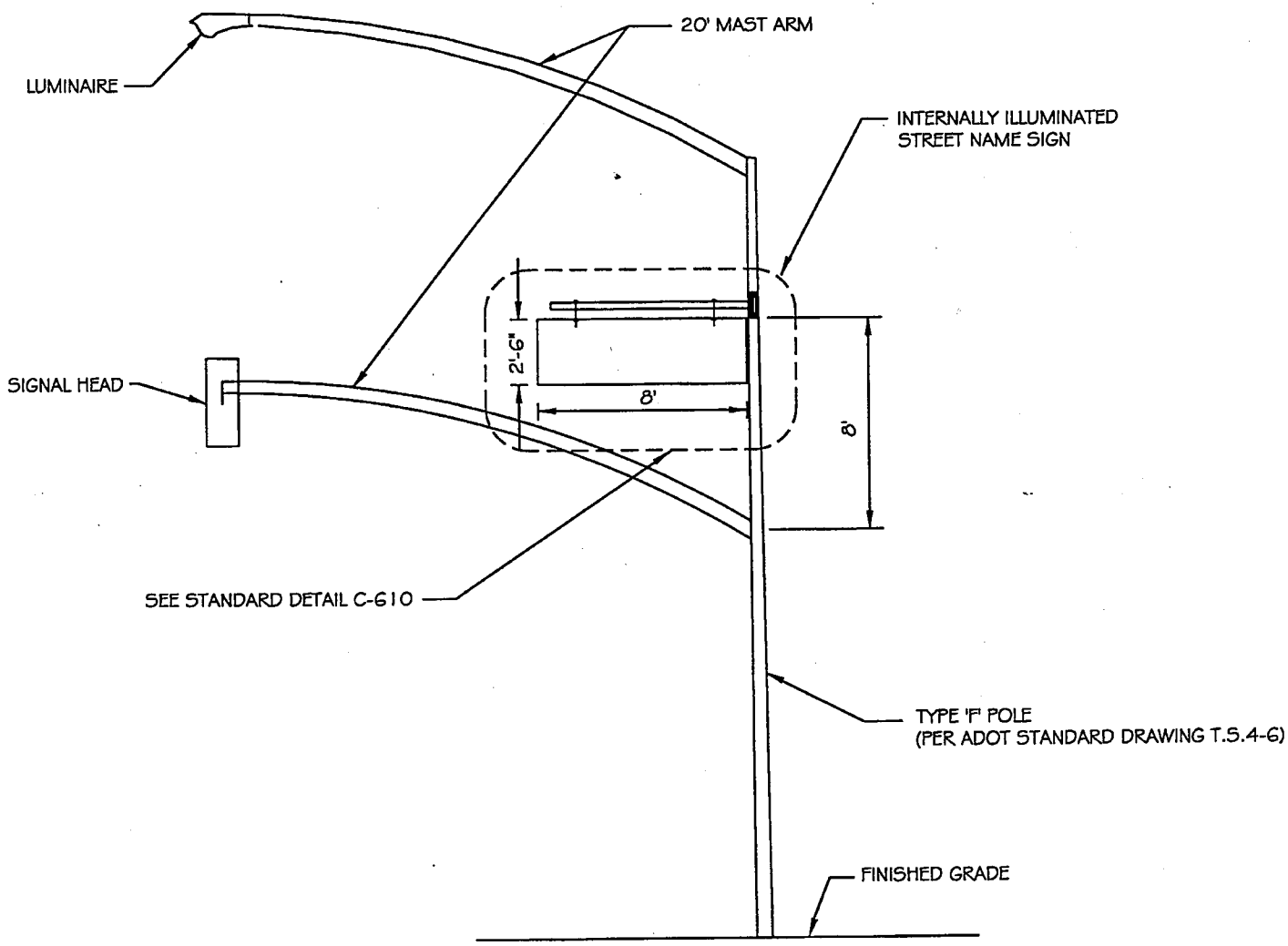

C-609 **REPLACES** **110C**	CITY OF CHANDLER STANDARD DETAIL	**INTERNALLY ILLUMINATED STREET NAME SIGN - F POLE MOUNTING**	APPROVED: Bryan D. Patterson CITY ENGINEER DATE: 11-19-99	DETAIL NO. **C-609** NTS

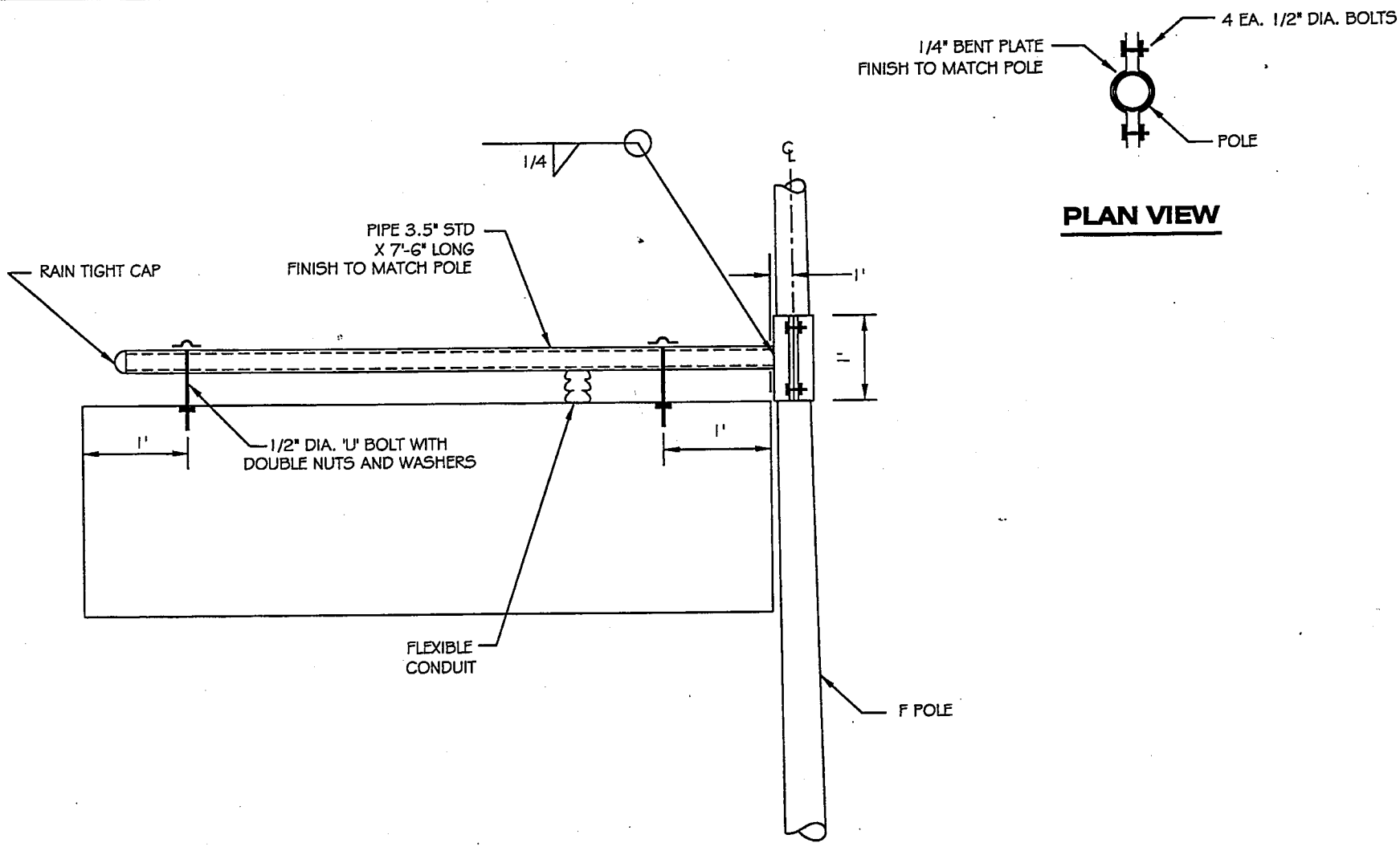

NOTE:

FINISHED SIGN SHALL BE ABLE TO SWING ABOUT MAST.

C-610 **REPLACES** **110D**	CITY OF CHANDLER STANDARD DETAIL	**INTERNALLY ILLUMINATED STREET NAME SIGN F POLE MOUNTING DETAIL**	APPROVED: Bryan D. Patterson CITY ENGINEER DATE: 11-19-99	DETAIL NO. **C-610** NTS

NOTES:

1. THE BOTTOM OF THE SIGN SHALL BE 5'-4" ABOVE FINISHED GRADE OR 7'-0" WHEN PLACED IN PEDESTRIAN CIRCULATION PATH.
2. SIGN SHALL BE CENTERED ON THE PARKING SPACE AND PLACED 2.5 FEET FROM FACE OF CURB. IN PARKING LOT SITUATIONS WITHOUT CURBING, SIGN MAY BE PLACED AT THE END OF THE STALL.
3. VAN ACCESSIBLE TAB TO BE USED, AS REQUIRED.

DETAIL NO.					DETAIL NO.
C-611	CITY OF CHANDLER STANDARD DETAIL	**ACCESSIBLE PARKING SIGN**	APPROVED: CITY ENGINEER		**C-611**
NTS			DATE: 05-10-2018		NTS

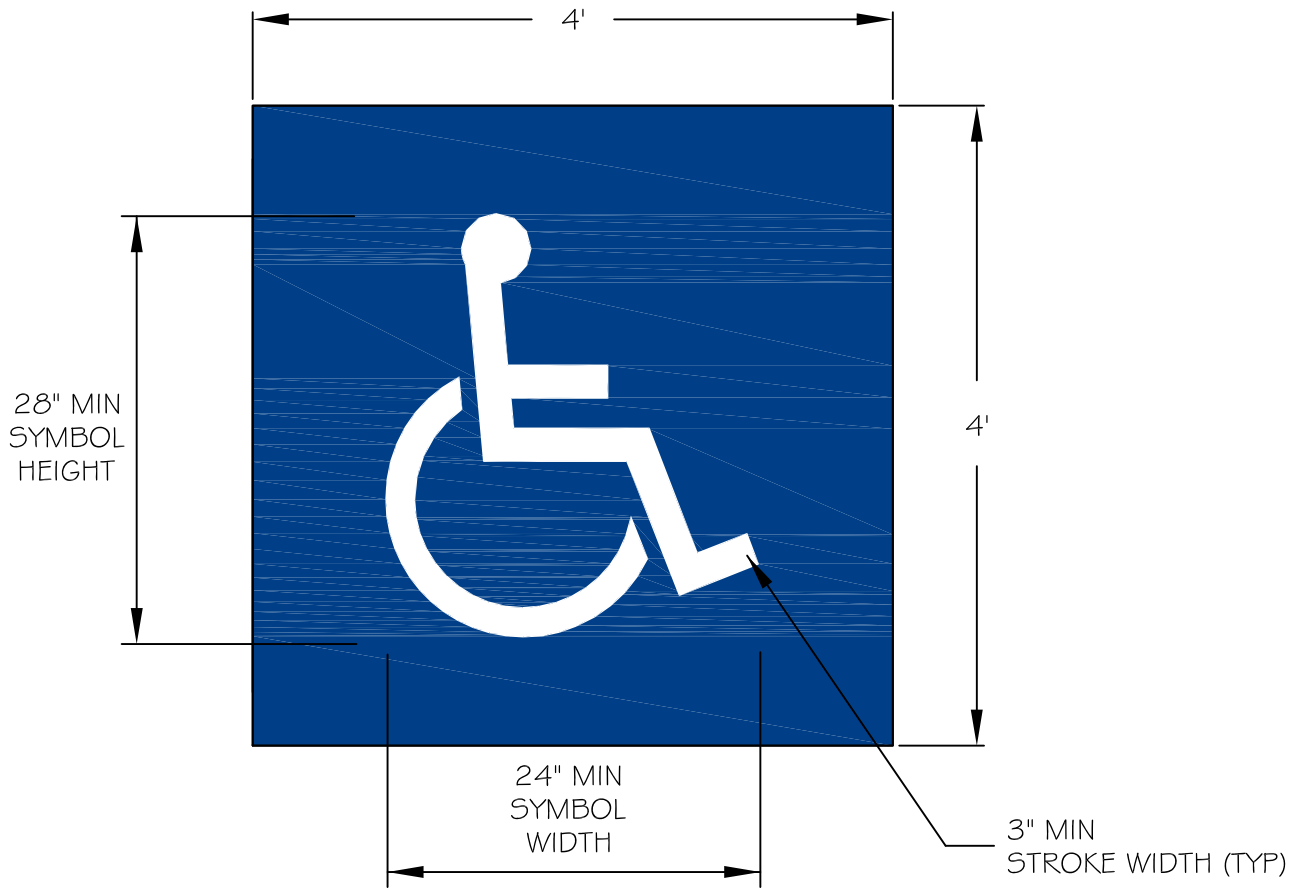

NOTES:

1. THERMOPLASTIC PAVEMENT MARKINGS SHALL BE WHITE SYMBOL ON 4' X 4' BLUE SQUARE.

2. SYMBOL MEASUREMENTS AND STROKE WIDTH SHALL MEET CURRENT MUTCD REQUIREMENTS.

DETAIL NO.					DETAIL NO.
C-612	CITY OF CHANDLER STANDARD DETAIL	**ACCESSIBLE PARKING PAVEMENT MARKING SYMBOL**	APPROVED: CITY ENGINEER		**C-612**
NTS			DATE: 05-10-2018		NTS

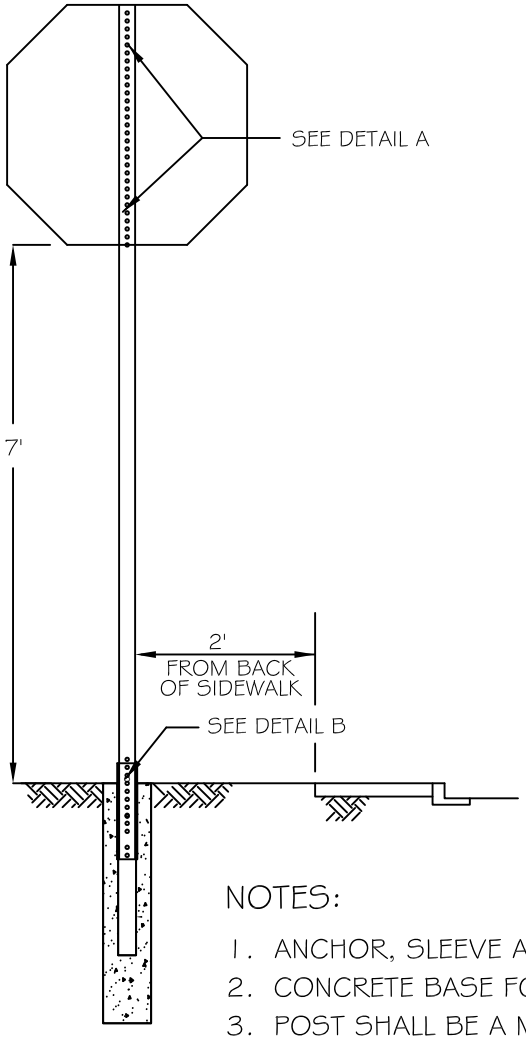

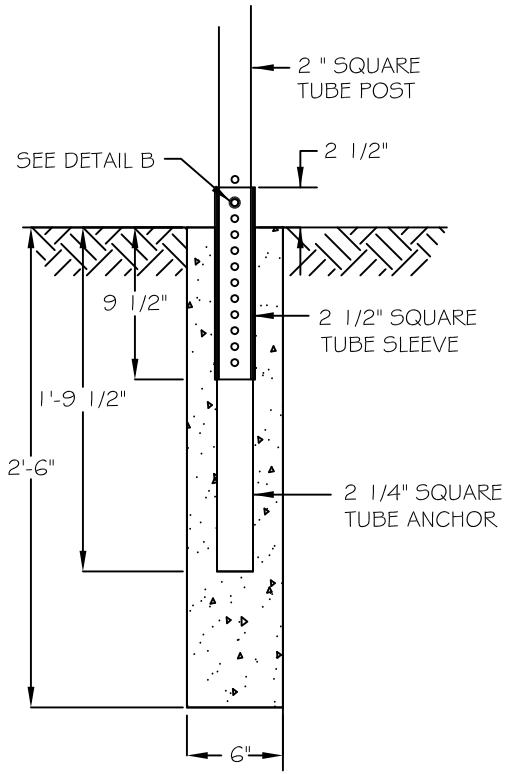

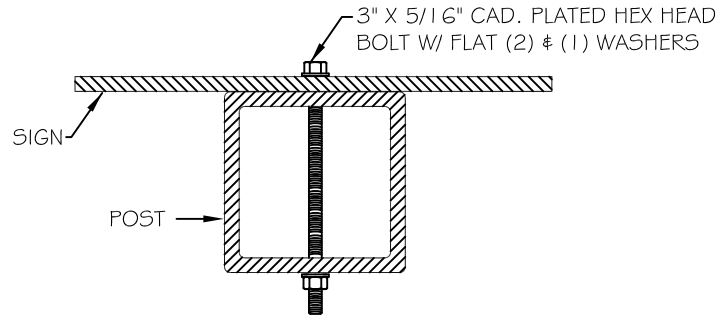

SIGN MOUNTING

DETAIL A

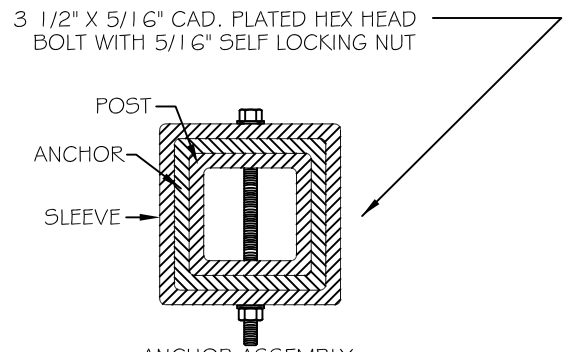

ANCHOR ASSEMBLY

DETAIL B

NOTES:

1. ANCHOR, SLEEVE AND POST ALL TO BE 12 GAUGE, .105 INCH GALVANIZED STEEL.
2. CONCRETE BASE FOUNDATION SHALL BE CLASS 'C' CONCRETE AS PER MAG STANDARD SPECIFICATIONS SEC. 505 + 725.
3. POST SHALL BE A MINIMUM LENGTH OF 11' AND SHALL BE INSERTED NOT LESS THAN 12" INTO THE ANCHOR. POST WILL NEED TO BE 12' IN LENGTH FOR ALL 'WARNING' SIGN INSTALLATIONS.
4. THE FRONT AND BACK SIDES OF POST SHALL HAVE 7/16" HOLES PUNCHED ON 1" CENTERS.
5. ANCHOR SHALL HAVE HOLES PUNCHED FOR THE TOP 3" ONLY AND BOTTOM TAPED TO PREVENT CONCRETE FROM SEEPING IN DURING INSTALLATION.

DETAIL NO.					DETAIL NO.
C-613	CITY OF CHANDLER STANDARD DETAIL	**SIGN POST AND BASE**	APPROVED: CITY ENGINEER		**C-613**
NTS			DATE: 05-10-2018		NTS

LANE LINE

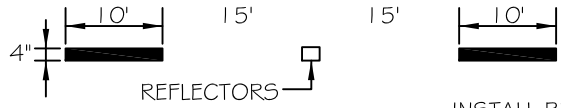

TURN LANE

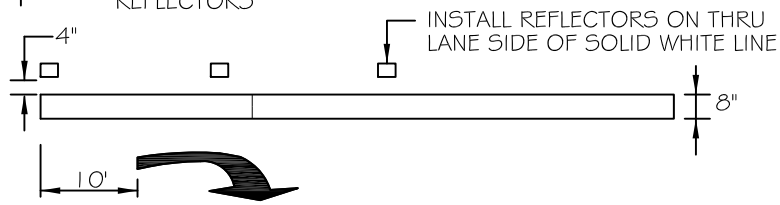

LANE DROP

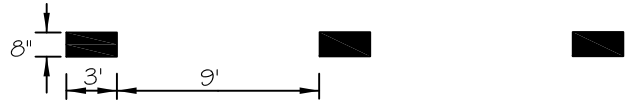

EDGE LINES

DOUBLE YELLOW

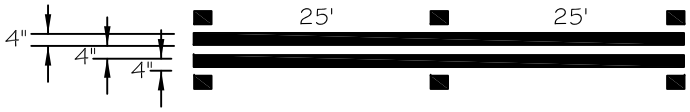

GUIDE LINES

THRU INTERSECTIONS

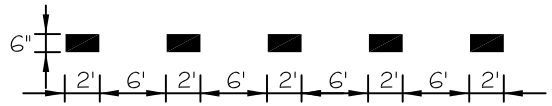

BIKE LANE

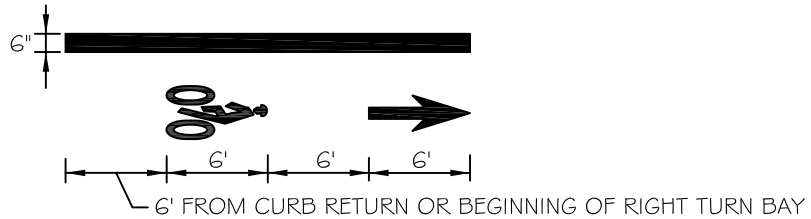

TWO-WAY LEFT TURN LANE

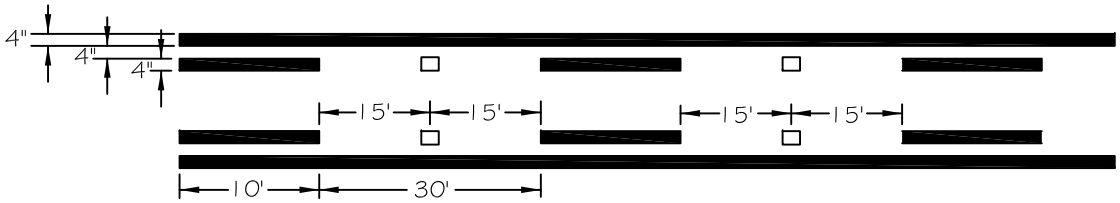

NOTE: ALL CROSS WALKS, STOP BARS, MINI-SKIPS, AND TURN LANE MARKINGS SHALL BE THERMOPLASTIC.

DETAIL NO.					DETAIL NO.
C-614	CITY OF CHANDLER STANDARD DETAIL	**PAVEMENT MARKING DETAILS**	APPROVED: CITY ENGINEER		**C-614**
NTS			DATE: 01-09-2020		NTS

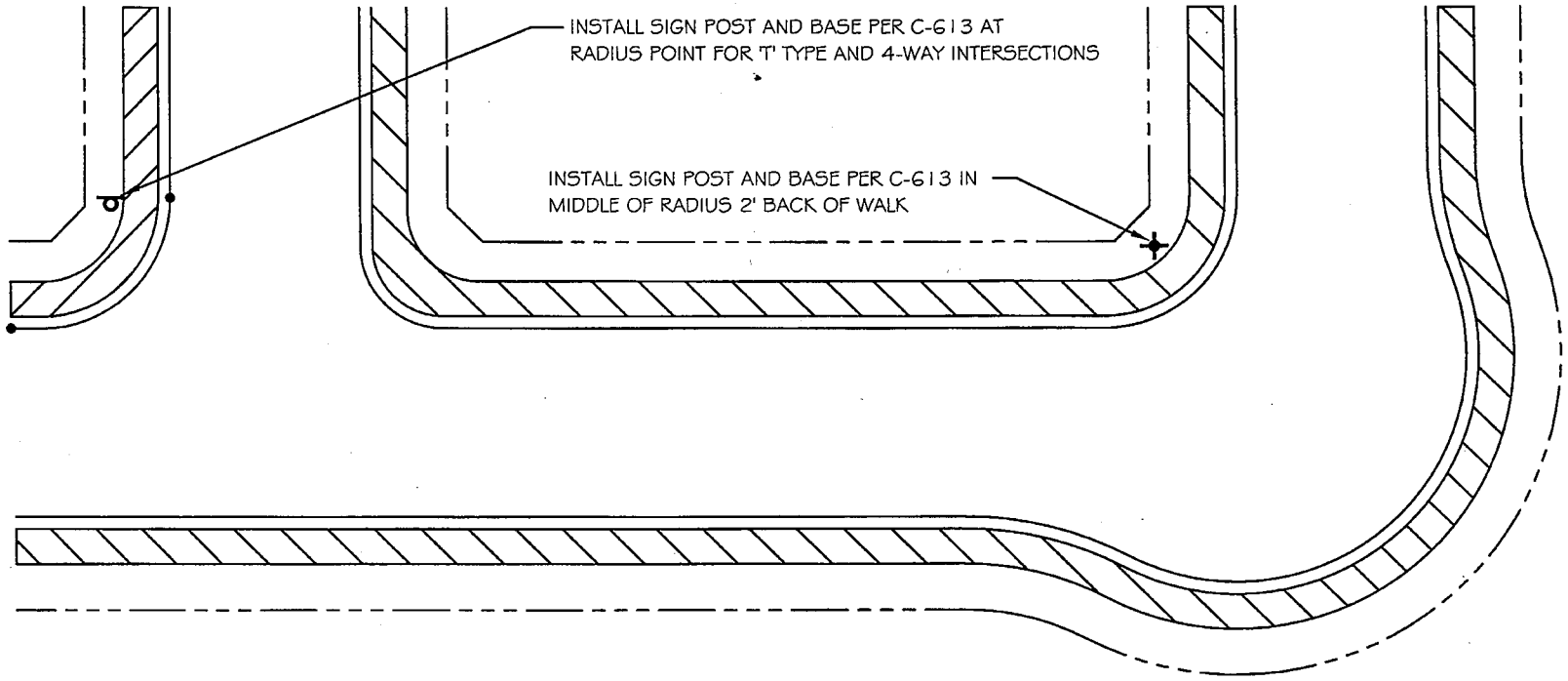

C-615		CITY OF CHANDLER STANDARD DETAIL	**SIGN POST AND BASE LOCATIONS FOR RESIDENTIAL STREETS**	APPROVED: CITY ENGINEER DATE: January 11, 2002	DETAIL NO. **C-615** NTS

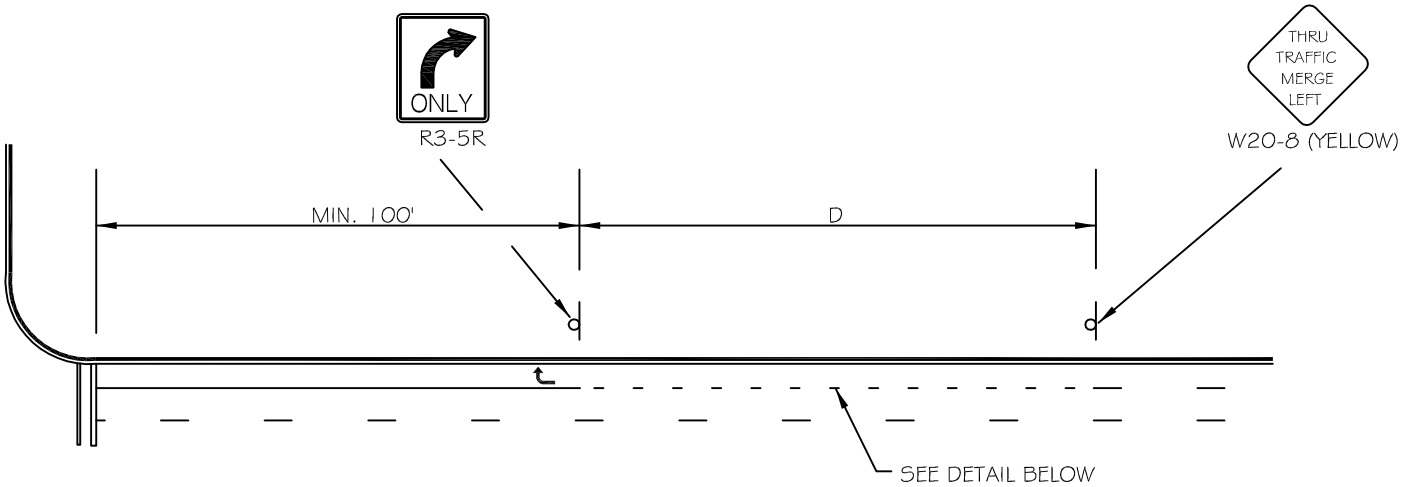

SPEED LIMIT	D* (FT)
20	175
25	250
30	325
35	400
40	475
45	550
50	625
55	700
60	775

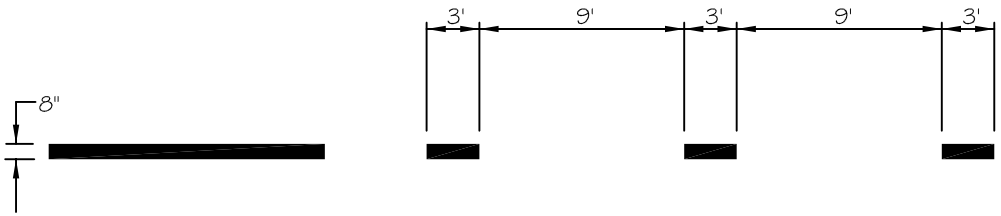

DETAIL A: FROM MUTCD FIGURE 3B-10

* FROM MUTCD TABLE 2C-4

DETAIL NO.					DETAIL NO.
C-616	CITY OF CHANDLER STANDARD DETAIL	**RIGHT TURN LANE DROP**	APPROVED: CITY ENGINEER		**C-616**
NTS			DATE: 3/14/2013		NTS

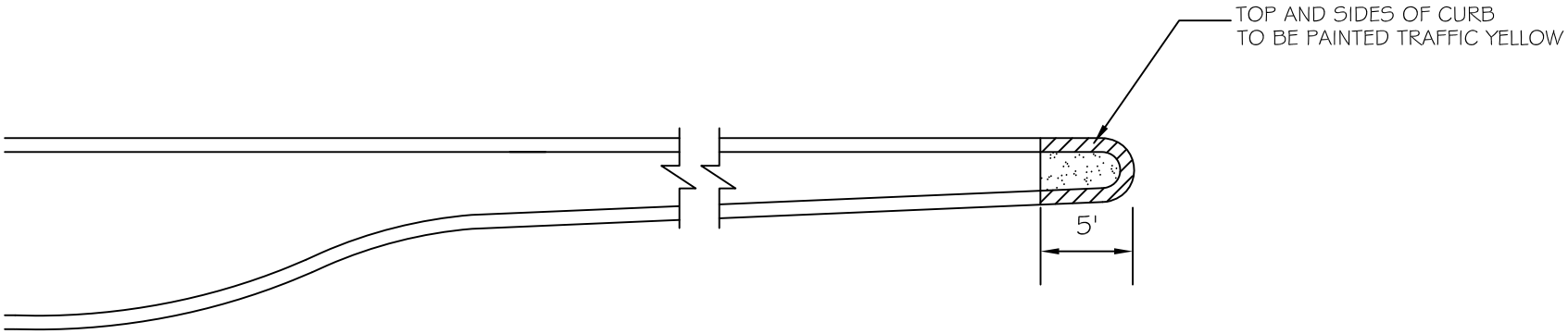

3' TYPICAL MEDIAN NOSE

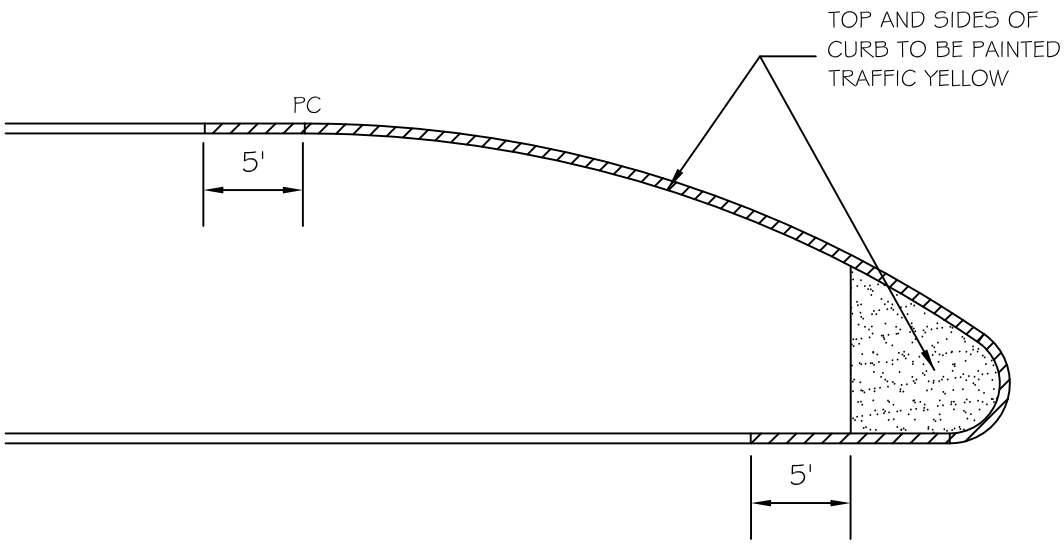

16' RAISED MEDIAN OR GREATER

DETAIL NO.					DETAIL NO.
C-617	CITY OF CHANDLER STANDARD DETAIL	**MEDIAN NOSE PAINTING**	APPROVED: CITY ENGINEER		**C-617**
NTS			DATE: 05-10-2018		NTS

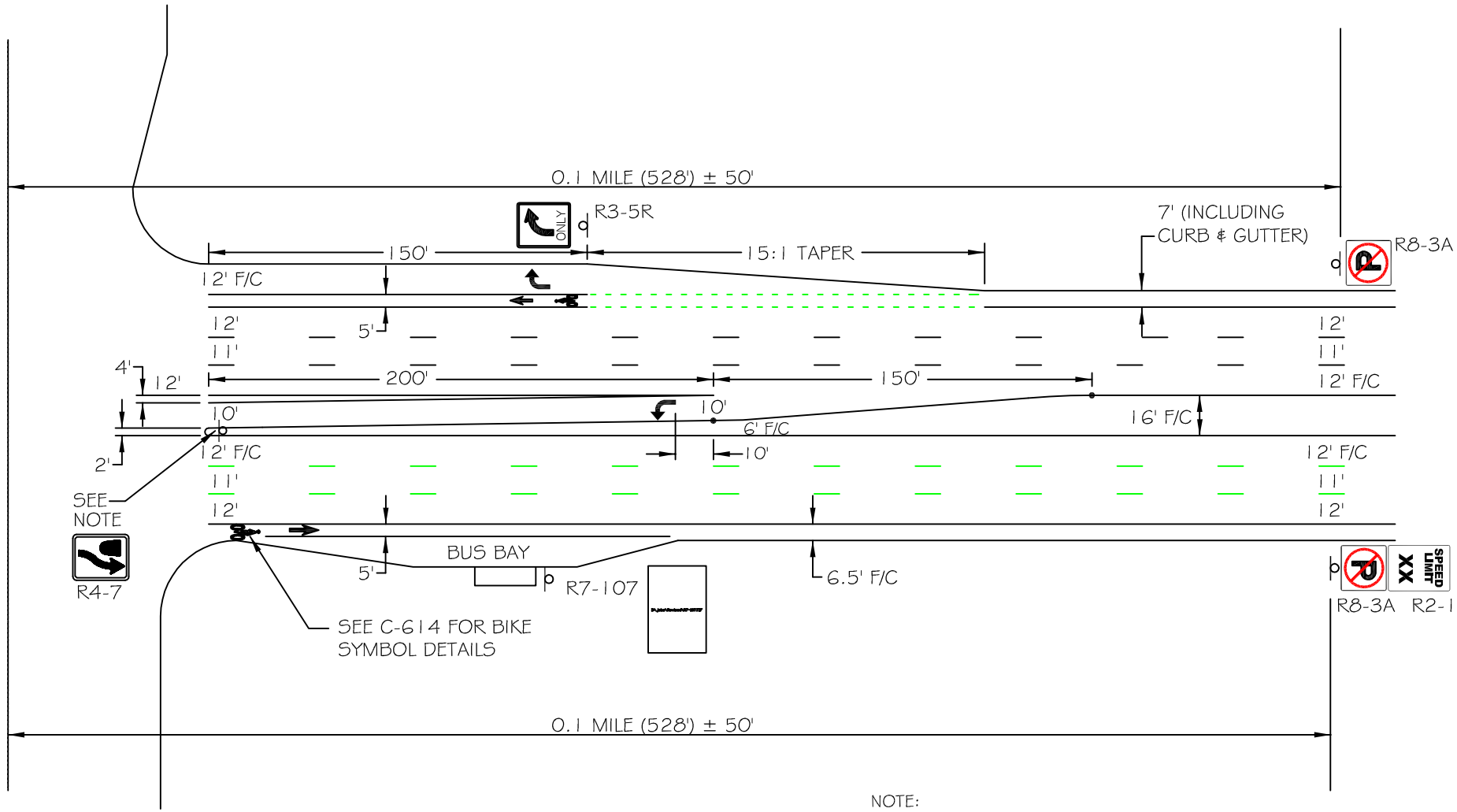

NOTE:
INSTALL KEEP RIGHT (R4-7) ONLY IF MEDIAN IS BEING INTRODUCED AT THIS POINT ALONG THE ARTERIAL ROAD OR AT SIGNALIZED INTERSECTIONS

DETAIL NO.					DETAIL NO.
C-618	CITY OF CHANDLER STANDARD DETAIL	**TYPICAL SIGNS AND MARKINGS ARTERIAL ROAD**	APPROVED: CITY ENGINEER		**C-618**
NTS			DATE: 3/14/2013		NTS

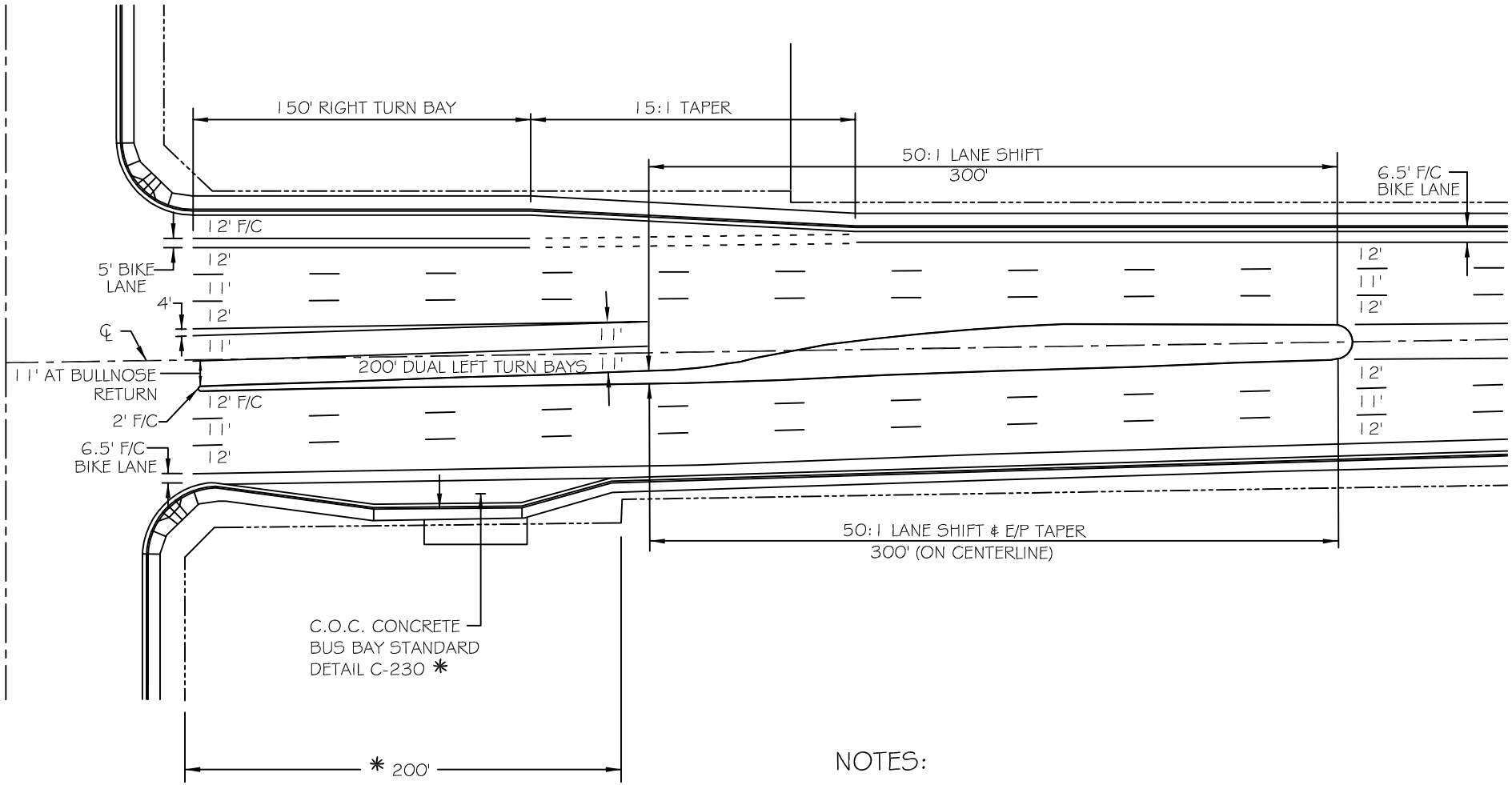

NOTES:

50 : 1 TAPERS FOR REDIRECTION OF THROUGH LANES

15 : 1 TAPERS FOR RIGHT TURN BAY APPROACHES

ALL DIMENSIONS TO CENTER OF LANE LINE UNLESS OTHERWISE NOTED

DETAIL NO.					DETAIL NO.
C-619	CITY OF CHANDLER STANDARD DETAIL	**TYPICAL LANE WIDTHS - ARTERIAL ROAD WITH DOUBLE LEFT TURNS**	APPROVED: CITY ENGINEER		**C-619**
NTS			DATE: 3/14/2013		NTS

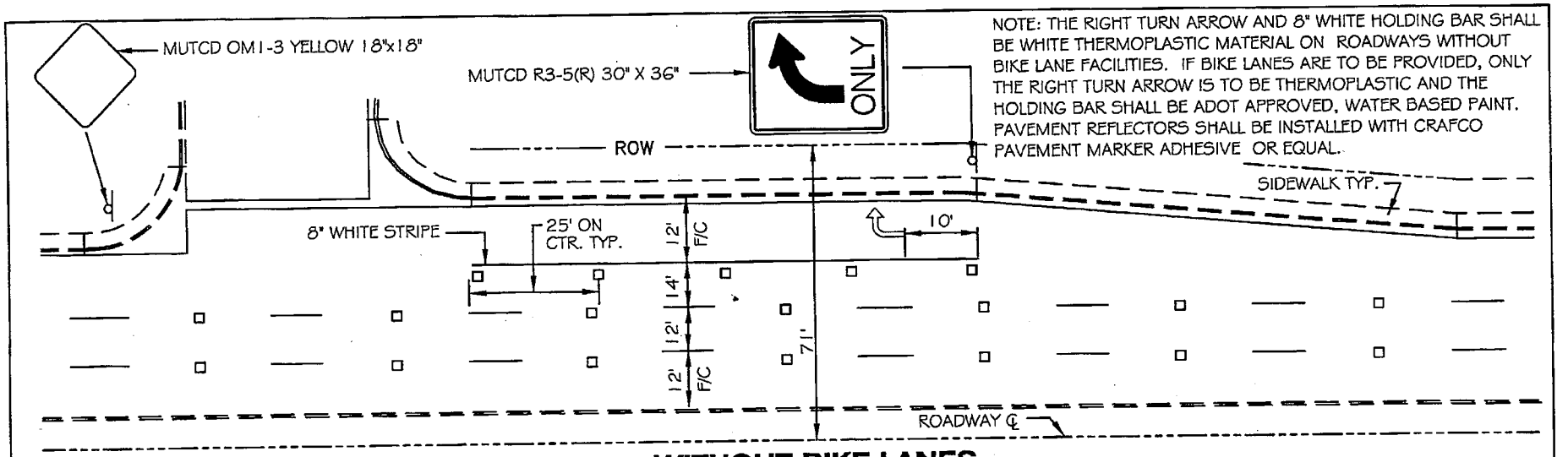

NOTE: THE RIGHT TURN ARROW AND 8" WHITE HOLDING BAR SHALL BE WHITE THERMOPLASTIC MATERIAL ON ROADWAYS WITHOUT BIKE LANE FACILITIES. IF BIKE LANES ARE TO BE PROVIDED, ONLY THE RIGHT TURN ARROW IS TO BE THERMOPLASTIC AND THE HOLDING BAR SHALL BE ADOT APPROVED, WATER BASED PAINT. PAVEMENT REFLECTORS SHALL BE INSTALLED WITH CRAFCO PAVEMENT MARKER ADHESIVE OR EQUAL.

WITHOUT BIKE LANES

(PRE 1993 ARTERIAL)

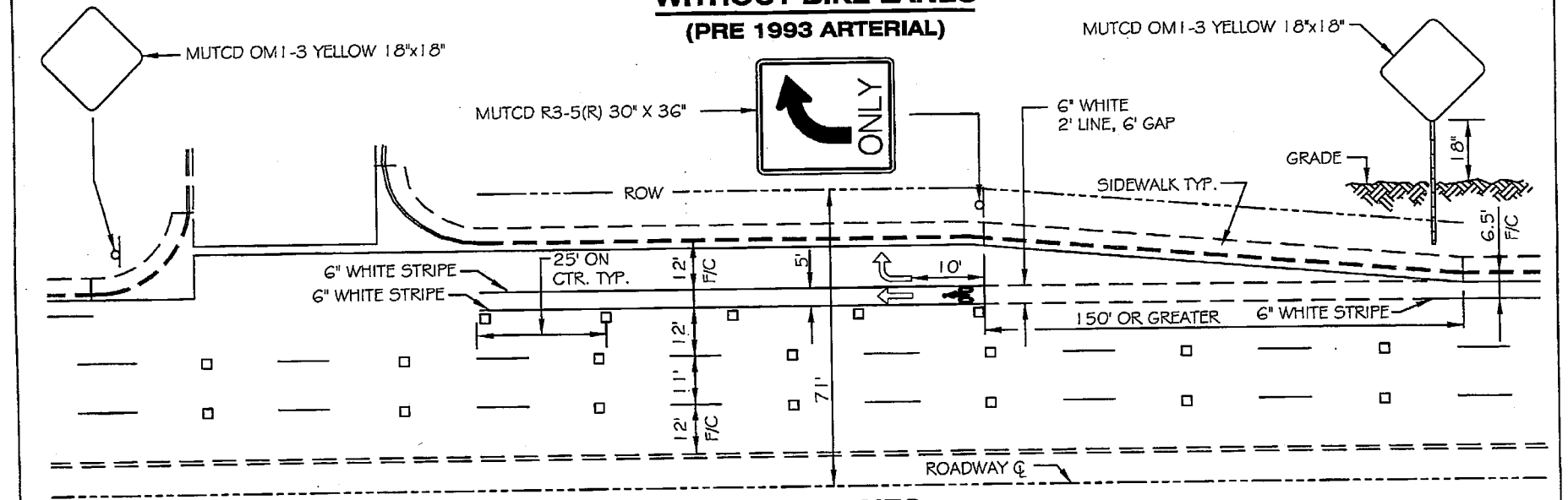

WITH BIKE LANES

DETAIL NO.					DETAIL NO.
C-620 NTS	CITY OF CHANDLER STANDARD DETAIL	**MAJOR ARTERIAL DECELERATION LANE SIGNING AND STRIPING**	APPROVED: CITY ENGINEER DATE: 01/08/09		**C-620** NTS

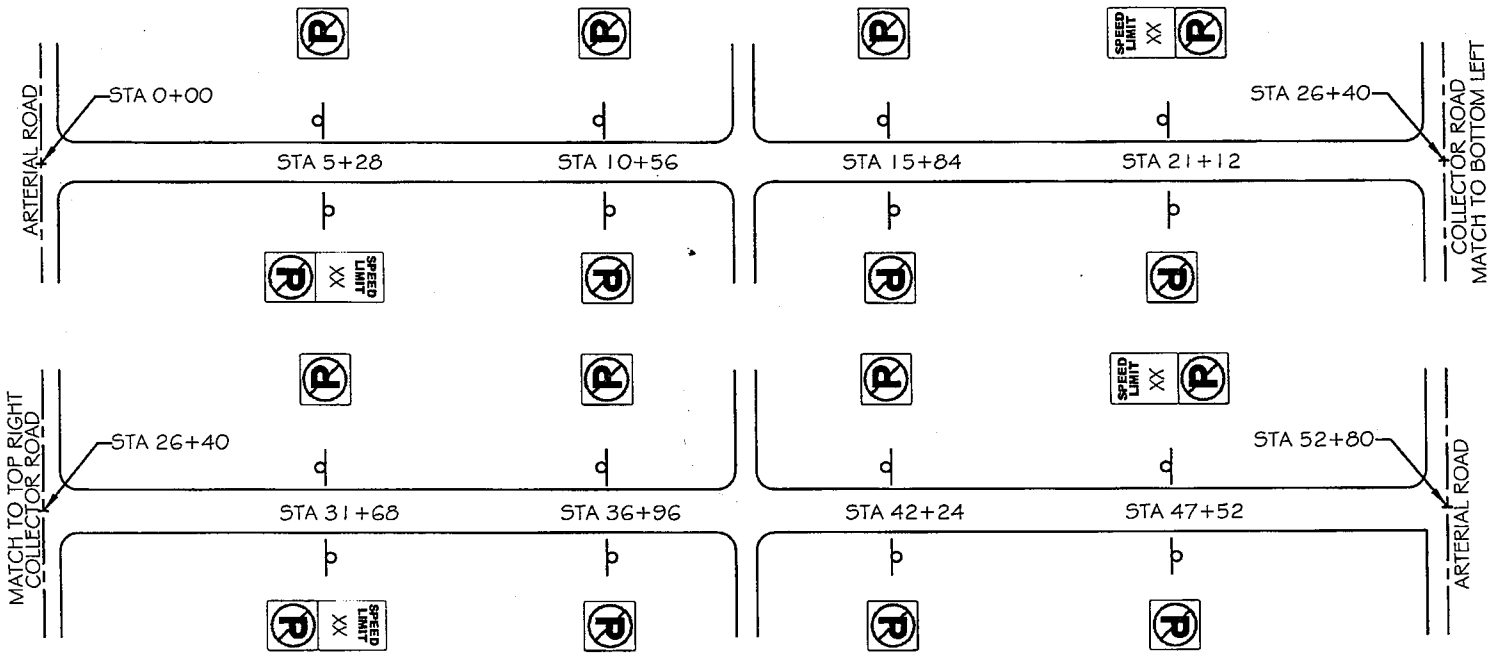

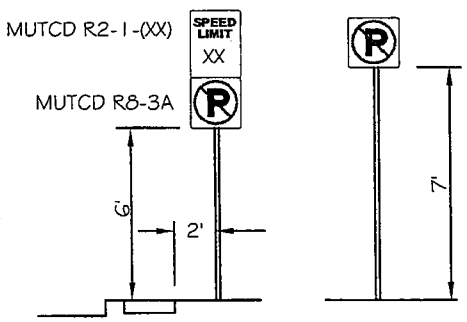

NOTE: SIGNING SHOWN ONLY REPRESENTS THE PLACEMENT OF THE NO-PARKING AND SPEED LIMIT SIGNS. ADDITIONAL SIGNING MAY BE REQUIRED DEPENDING ON EACH INDIVIDUAL SITUATION.

THE SPACING OF THE NO-PARKING SIGNS SHOULD BE 528' (1/10 MILE) APART, BUT MAY VARY UP TO 50' IF SIGN CAN BE MOUNTED ONTO A EXISTING POLE OR A STREET LIGHT POLE.

NO-PARKING SIGNS SHALL BE 24"x24" UNLESS OTHERWISE NOTED.

SPEED LIMIT SHALL BE DETERMINED BY THE CITY ENGINEER AND THE SIGN SHALL BE 24"x30" IN SIZE. THERE SHALL BE 4 SPEED LIMIT SIGNS PER MILE AS SHOWN ABOVE.

DETAIL NO.	CITY OF CHANDLER STANDARD DETAIL	ARTERIAL SIGNAGE	APPROVED: Elizabeth Burrows CITY ENGINEER DATE: January 11, 2002	DETAIL NO.
C-621 NTS				C-621 NTS

SEE PAVEMENT MARKING DETAIL C-614 FOR STRIPING WIDTHS.
SEE INTERSECTION MARKINGS DETAIL C-623 FOR NOTES
ON STRIPING MATERIAL AND REFLECTOR INSTALLATION.

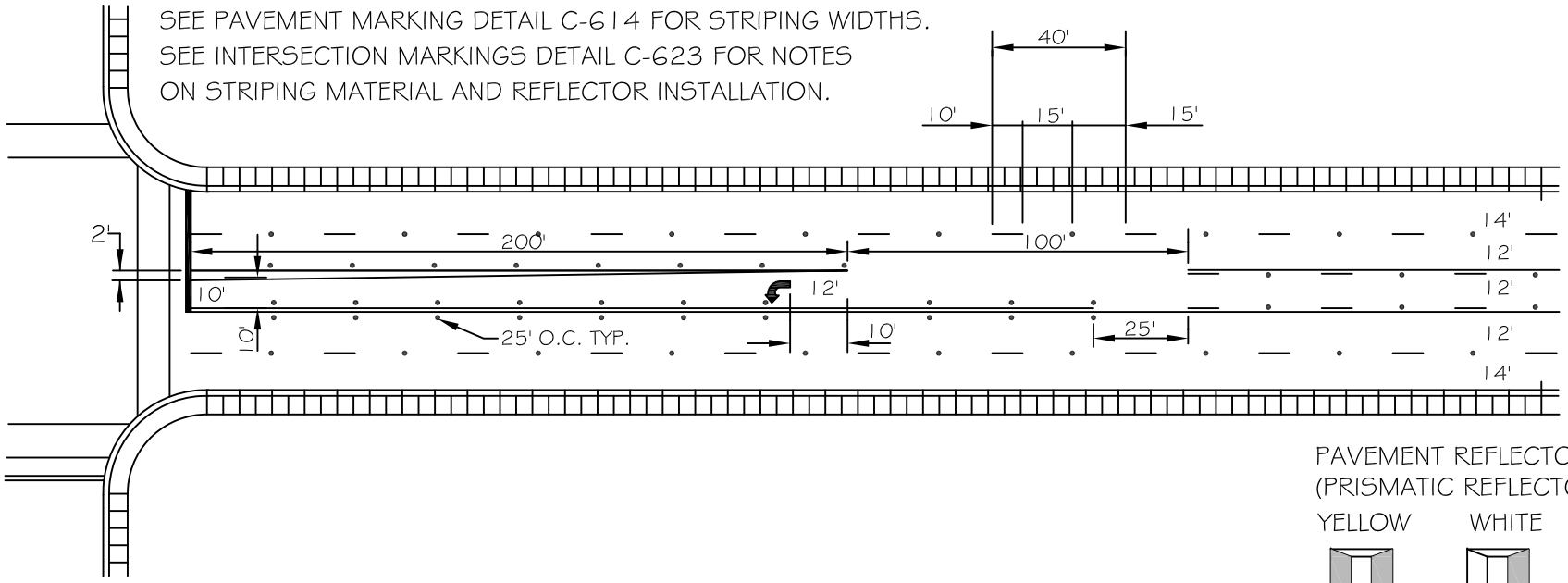

PAVEMENT REFLECTORS
(PRISMATIC REFLECTORS ONLY)

YELLOW WHITE

INSTALL WITH
CRAFCO BITUMINOUS
MATERIAL OR EQUAL

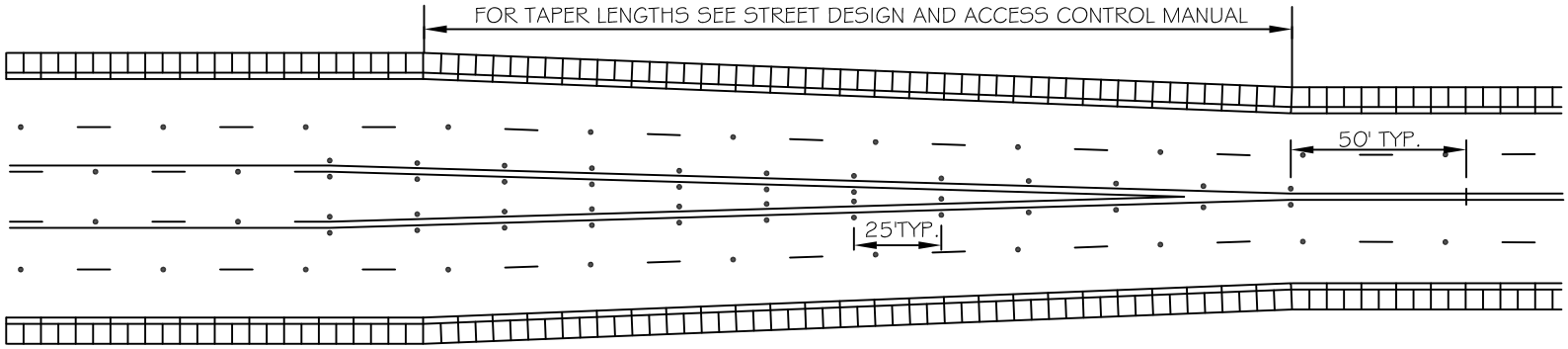

DETAIL NO.					DETAIL NO.
C-622	CITY OF CHANDLER STANDARD DETAIL	**ARTERIAL ROADWAY MARKINGS (W/O MEDIANS)**	APPROVED: CITY ENGINEER		**C-622**
NTS			DATE: 05-10-2018		NTS

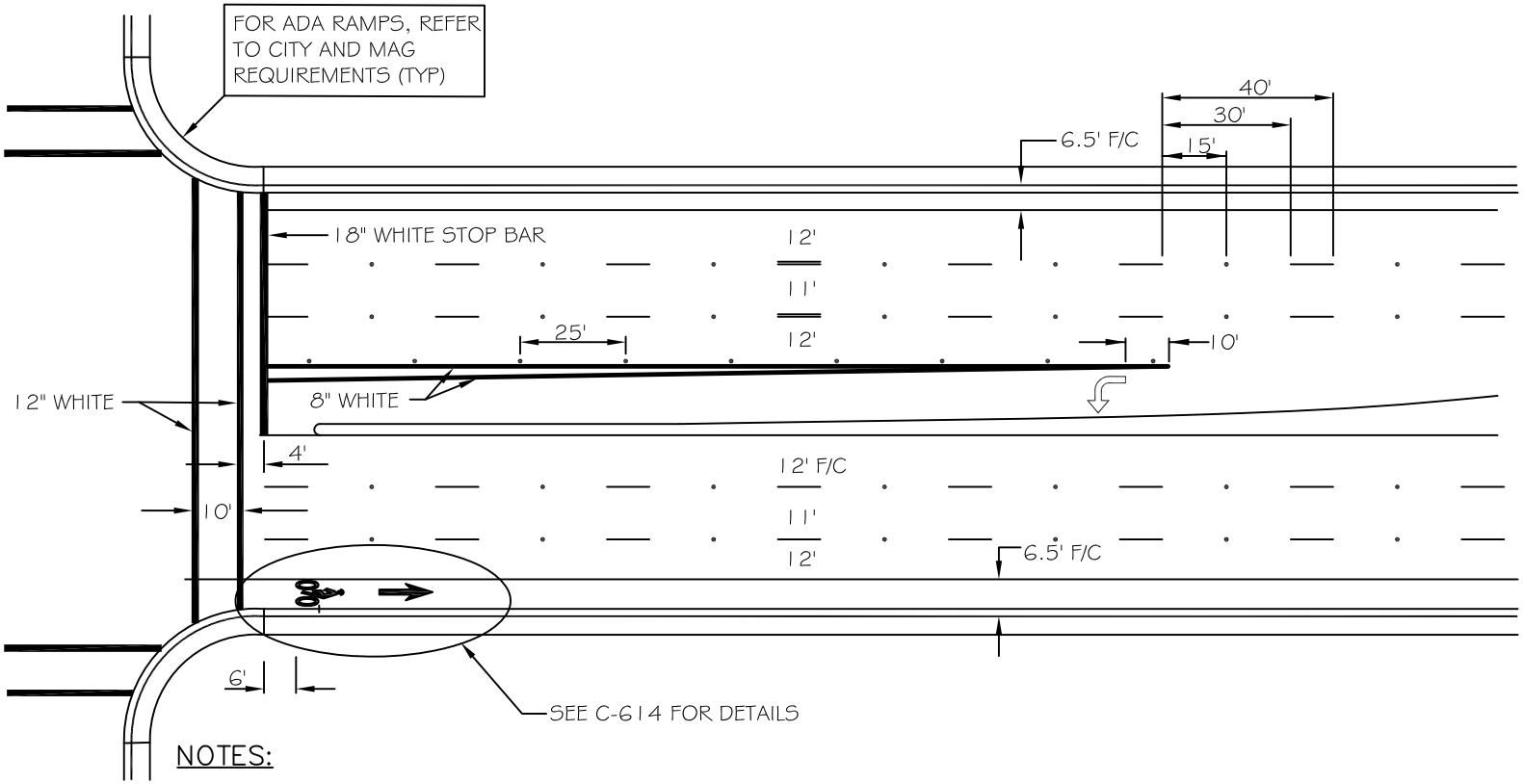

NOTES:

1. CROSSWALK AND STOP BAR STRIPING SHALL ONLY BE STRIPED AT SIGNALIZED OR MULTI-WAY STOP CONTROLLED INTERSECTIONS, UNLESS OTHERWISE NOTED BY THE TRAFFIC ENGINEERING OFFICE.

2. ROADWAYS WITHOUT BIKE LANES WILL HAVE DIFFERENT CROSS-SECTION. THE LANE WIDTHS WILL BE THE SAME WITH THE EXCEPTION OF THE OUTER LANES WHICH ARE 15' ± MEASURED FROM BACK OF CURB.

3. THERMOPLASTIC MATERIAL SHALL BE APPLIED AT A MIN. THICKNESS OF 60 MIL. WITH THE EXCEPTION OF BIKE LANES AND SYMBOLS. BIKE LANE AND SYMBOL STRIPING SHALL BE WATER BASED PAINT MEETING OR EXCEEDING ARIZONA DEPARTMENT OF TRANSPORTATION STANDARD DRAWINGS AND SPECIFICATIONS, UNLESS OTHERWISE NOTED

4. PAVEMENT REFLECTORS SHALL MEET OR EXCEED ARIZONA DEPARTMENT OF TRANSPORTATION STANDARD DRAWINGS AND SPECIFICATIONS, UNLESS OTHERWISE NOTED. PAVEMENT REFLECTORS SHALL BE INSTALLED WITH CRAFCO PAVEMENT MARKER ADHESIVE, OR EQUAL. ALL PAVEMENT REFLECTORS SHALL HAVE THE PRISMATIC REFLECTIVE SURFACE FACING ONCOMING TRAFFIC.

DETAIL NO.					DETAIL NO.
C-623	CITY OF CHANDLER STANDARD DETAIL	**INTERSECTION MARKINGS (WITH MEDIANS)**	APPROVED: CITY ENGINEER		**C-623**
NTS			DATE: 05-10-2018		NTS