# LANDSCAPE SERIES

# C-801 TO C-817

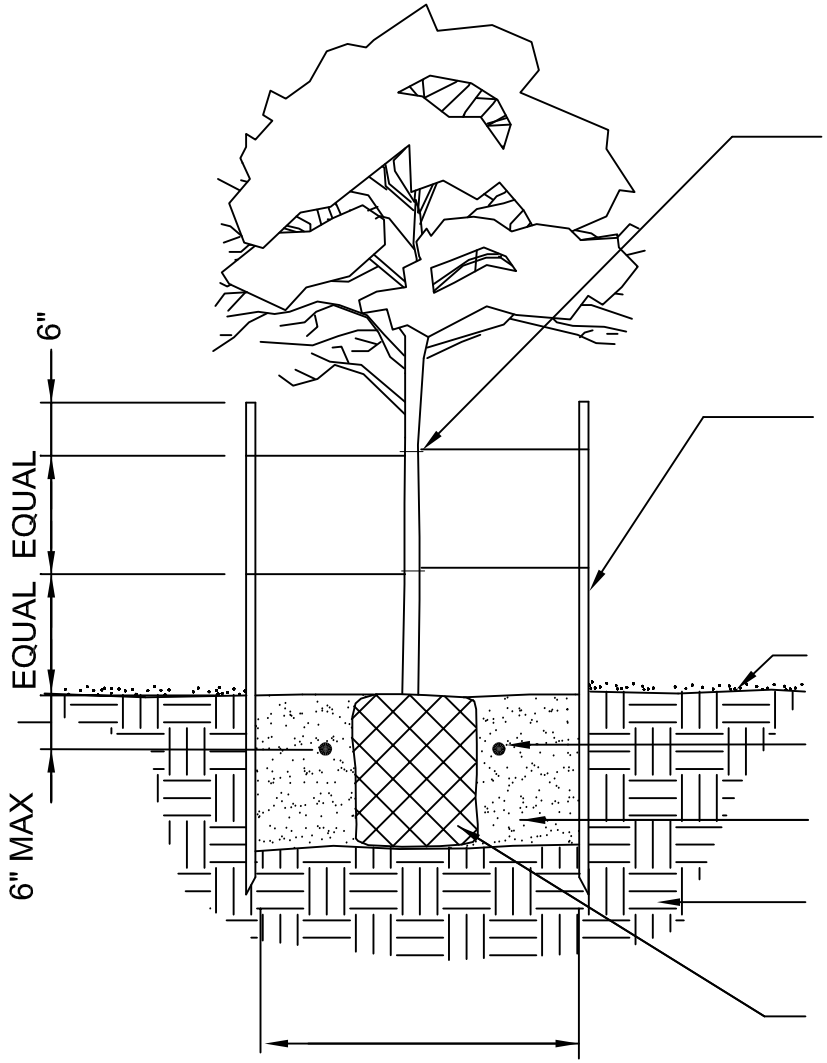


1/2" I.D. REINFORCED RUBBER HOSE, MAINTAIN 8" - 12" LOOP. TIE WIRE TO BE 12 AWG DOUBLE STRAND WIRE. WRAP AROUND TREE STAKE AND STAPLE TO HOLD IN PLACE.

2-2" DIA. X 8' LODGEPOLE PINE TREE STAKES

FINISH GRADE 2" DEPTH DG

PLANT TABLET (SEE SCHEDULE)

BACKFILL MIX (SEE SCHEDULE)

NATIVE SOIL

ROOTBALL

SEE PLANT PIT SCHEDULE

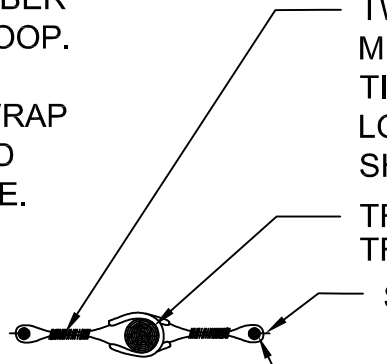


SINGLE-TRUNK

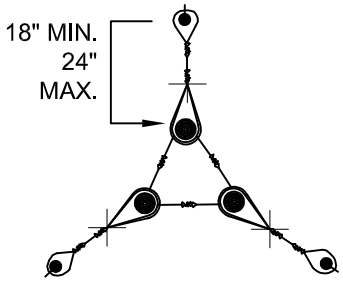


MULTI-TRUNK

PLAN VIEW

TREE STAKING NOTES-

1. STAKE TREES ONLY IF REQUIRED.
2. SET STAKES 6" MINIMUM IN UNDISTURBED SOIL.

* Latest Revision Febuary 2012

| DETAIL NO. | | | | | DETAIL NO. |
|---|---|---|---|---|---|
| **C- 801** NTS | CITY OF CHANDLER STANDARD DETAIL | **TREE PLANTING AND STAKING** | APPROVED: CITY ENGINEER DATE: 02/09/12 | | **C-801** |

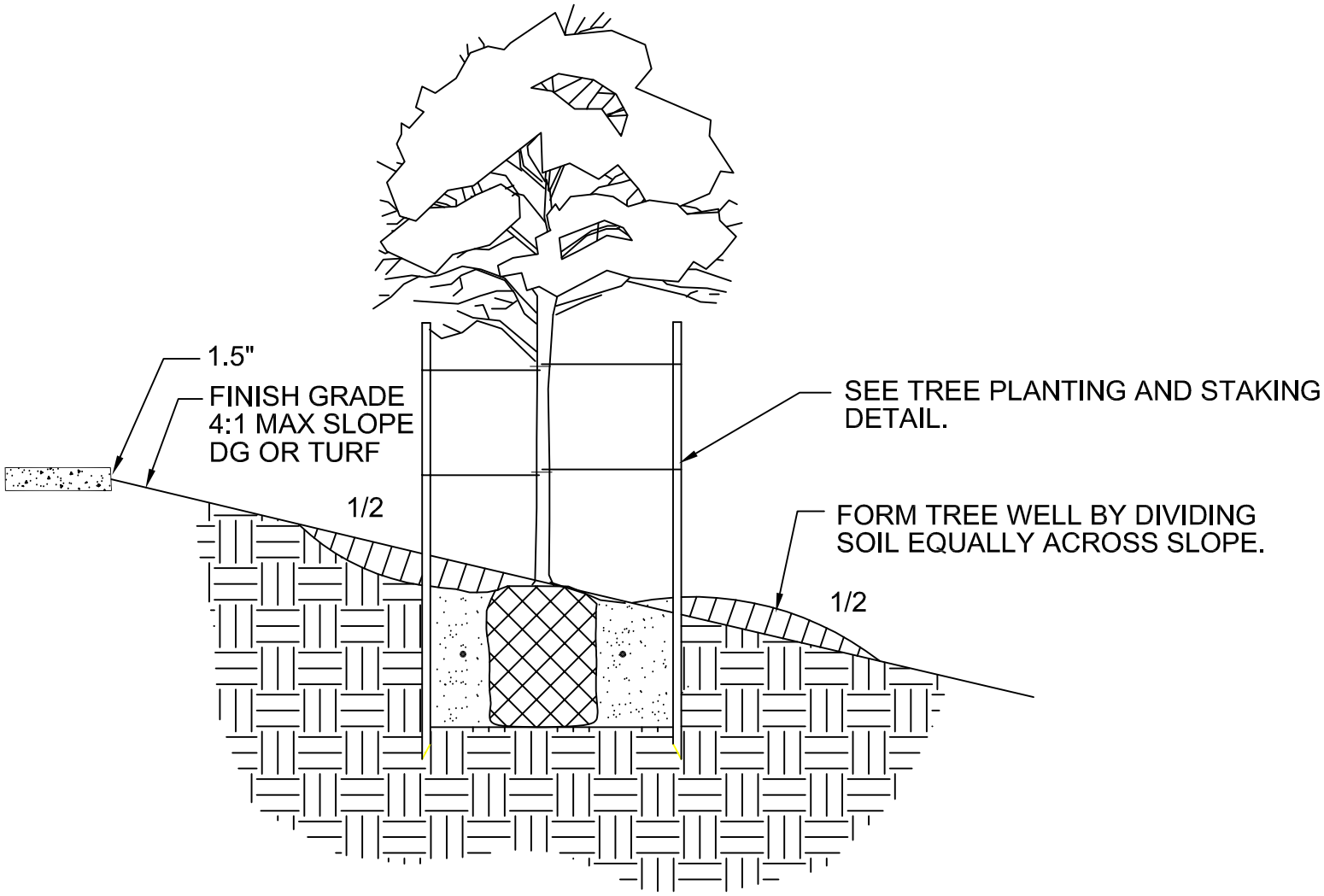


* Latest Revision Febuary 2012

| DETAIL NO. | | | | | |
|---|---|---|---|---|---|
| **C- 802** NTS | CITY OF CHANDLER STANDARD DETAIL | **TREE PLANTING SLOPE** | APPROVED: CITY ENGINEER<br>DATE: 02/09/12 | DETAIL NO. **C-802** |

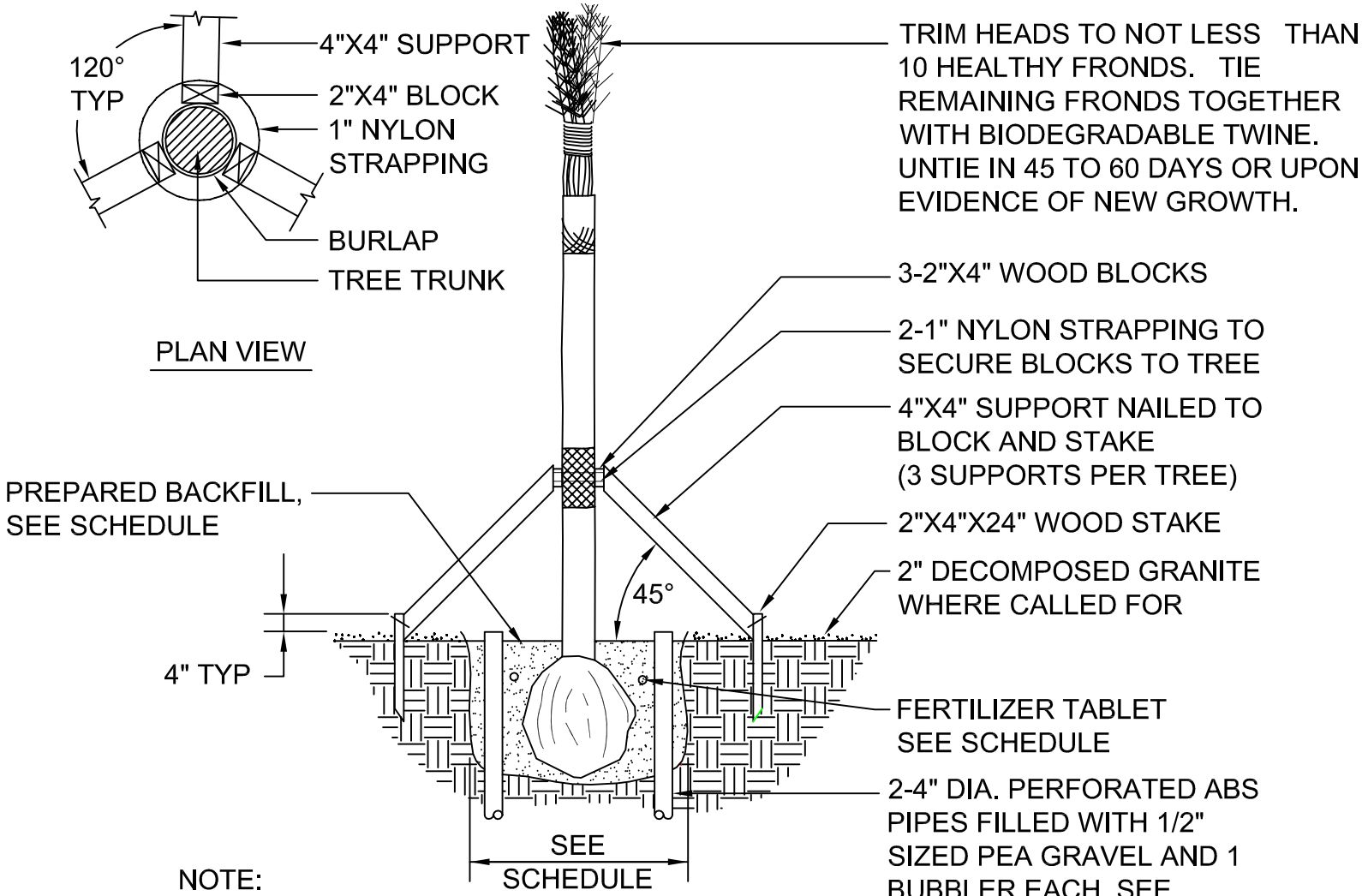


NOTE:
1. DO NOT BURY TRUNK - MAX 6" DEPTH LOWER THAN ORIGINAL PLANT DEPTH.

* Latest Revision Febuary 2012

| DETAIL NO. | | | | | DETAIL NO. |
|---|---|---|---|---|---|
| **C- 803** NTS | CITY OF CHANDLER STANDARD DETAIL | **PALM PLANTING AND BRACING** | APPROVED: CITY ENGINEER DATE: 02/09/12 | | **C-803** |

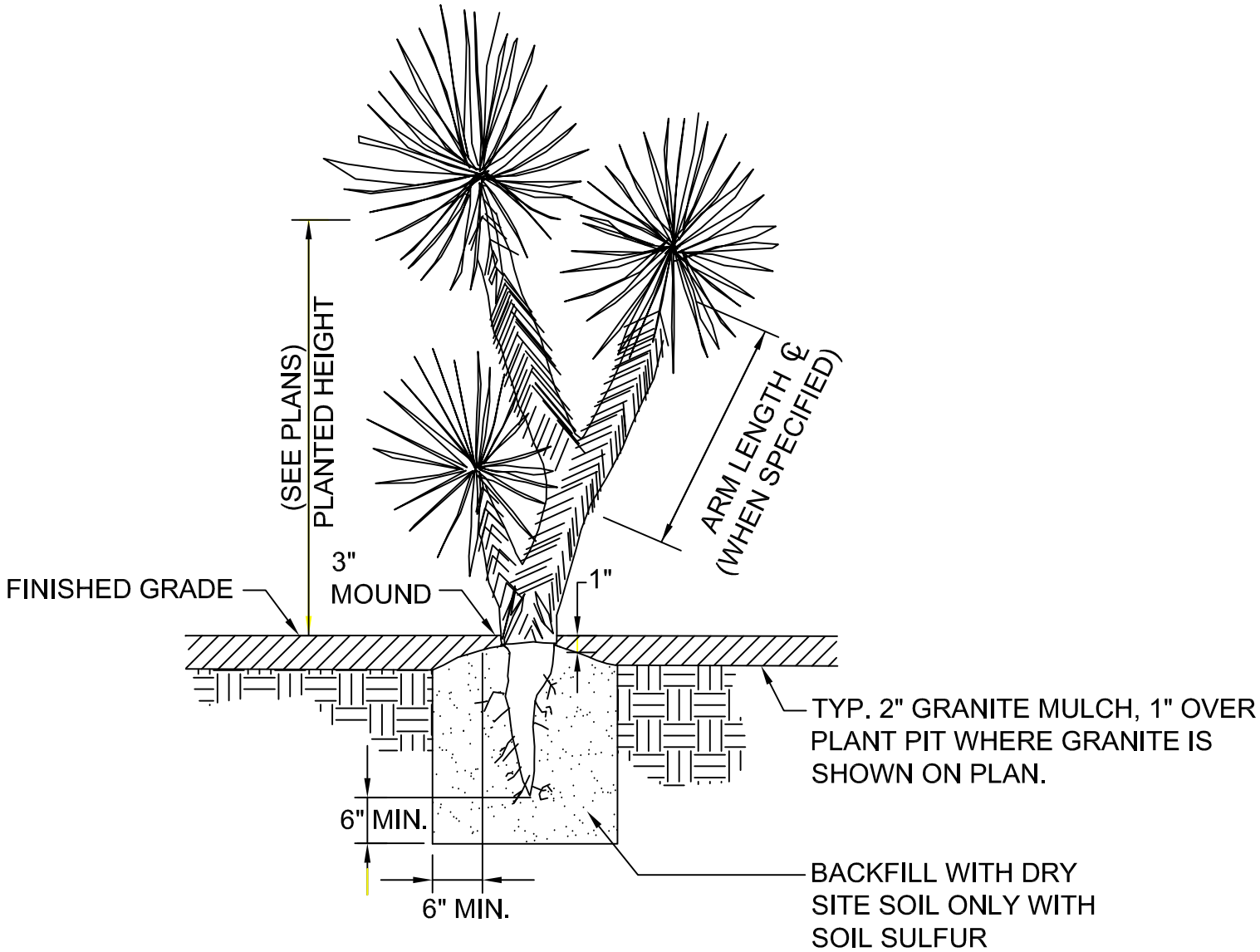


* Latest Revision Febuary 2012

| DETAIL NO. | | | | | DETAIL NO. |
|---|---|---|---|---|---|
| **C- 804** NTS | CITY OF CHANDLER STANDARD DETAIL | **CACTUS AND ACCENT PLANTING** | APPROVED: CITY ENGINEER DATE: 02/09/12 | | **C-804** |

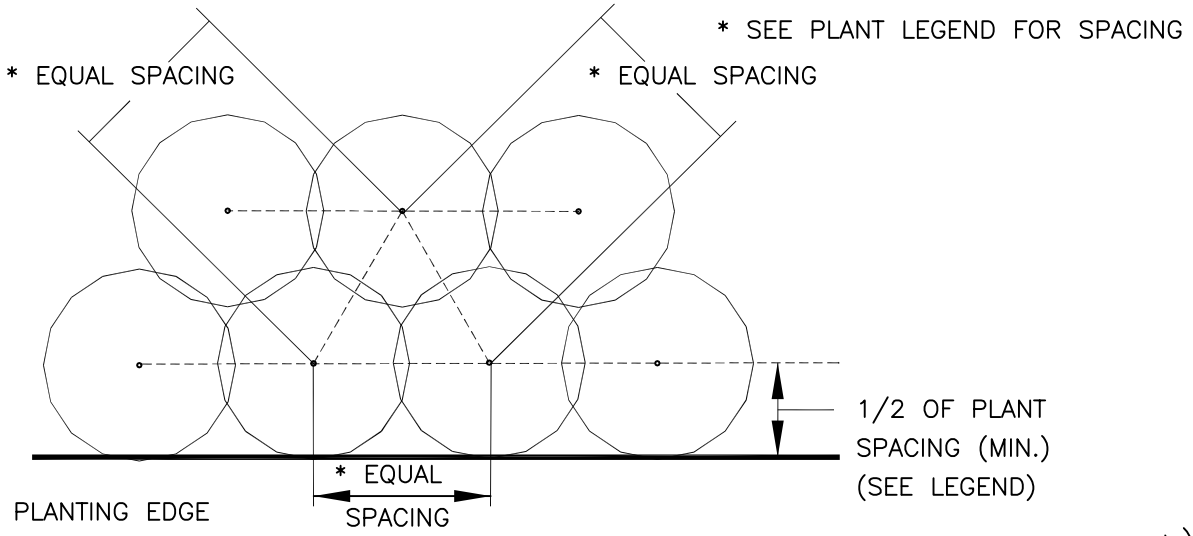


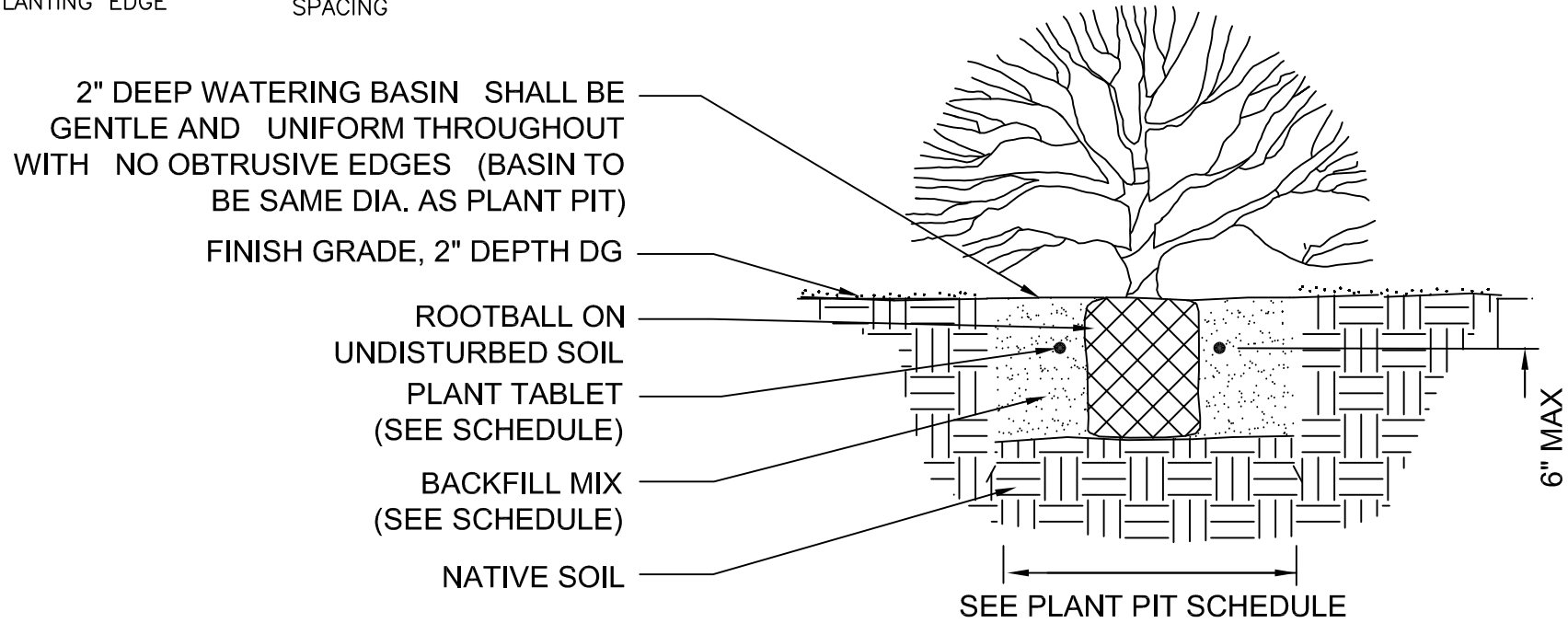


* Latest Revision Febuary 2012

| DETAIL NO. | | | | | DETAIL NO. |
|---|---|---|---|---|---|
| **C- 805** NTS | CITY OF CHANDLER STANDARD DETAIL | **SHRUB AND GROUND COVER PLANTING** | APPROVED: CITY ENGINEER DATE: 02/09/12 | | **C-805** |

## A - PLANTING PIT DIMENSIONS FOR TREES, SHRUBS, GROUNDCOVERS, CACTUS AND ACCENTS

| PLANT SIZE | WIDTH | DEPTH |
|---|---|---|
| 1 GALLON | 2X's the width of the Root Ball | Same Depth as Root Ball |
| 5 GALLON | 2X's the width of the Root Ball | Same Depth as Root Ball |
| 15 GALLON | 3X's the width of the Root Ball | Same Depth as Root Ball |
| 24" BOX | 3X's the width of the Root Ball | Same Depth as Root Ball |
| 30" BOX | 3X's the width of the Root Ball | Same Depth as Root Ball |
| 36" BOX | 3X's the width of the Root Ball | Same Depth as Root Ball |
| 48" BOX | 3X's the width of the Root Ball | Same Depth as Root Ball |

## B - PLANT PIT DIMENSIONS FOR PALMS

| TRUNK DIAMETER AT GRADE | MINIMUM DIAMETER PLANTING PIT | MINIMUM DEPTH PLANTING PIT |
|---|---|---|
| 12 – 24" | 48" | 42" |
| 25 – 32" | 56" | 44" |
| 33 – 36" | 60" | 48" |

## C - PLANT TABLET SCHEDULE FOR TREES, SHRUBS, CACTUS, ACCENTS AND PALMS

### TREES, SHRUBS, CACTUS AND ACCENTS

| | |
|---|---|
| 1 GALLON | 1 TABLET |
| 5 GALLON | 2 TABLETS |
| 15 GALLON | 4 TABLETS |
| 24" BOX | 6 TABLETS |
| 36" BOX | 8 TABLETS |
| 48" BOX | 10 TABLETS |

### PALMS

1 TABLET PER 2 FEET OF TRUNK HEIGHT

## D - BACKFILL MIX

### TREES AND SHRUBS

3 PARTS EXCAVATED TOPSOIL
1 PART SAND
PLANT TABLETS PER SCHEDULE C

### CACTUS AND ACCENTS

1 PART EXCAVATED TOPSOIL
1 PART SAND
PLANT TABLETS PER SCHEDULE C

### PALMS

PALM TREE BACKFILL SHALL BE 100% SAND.
PLANT TABLETS PER SCHEDULE C

* Latest Revision Febuary 2012

| DETAIL NO. | | | | | DETAIL NO. |
|---|---|---|---|---|---|
| C- 806 NTS | CITY OF CHANDLER STANDARD DETAIL | PLANT PIT SCHEDULE | APPROVED: CITY ENGINEER<br>DATE: 02/09/12 | | C-806 |

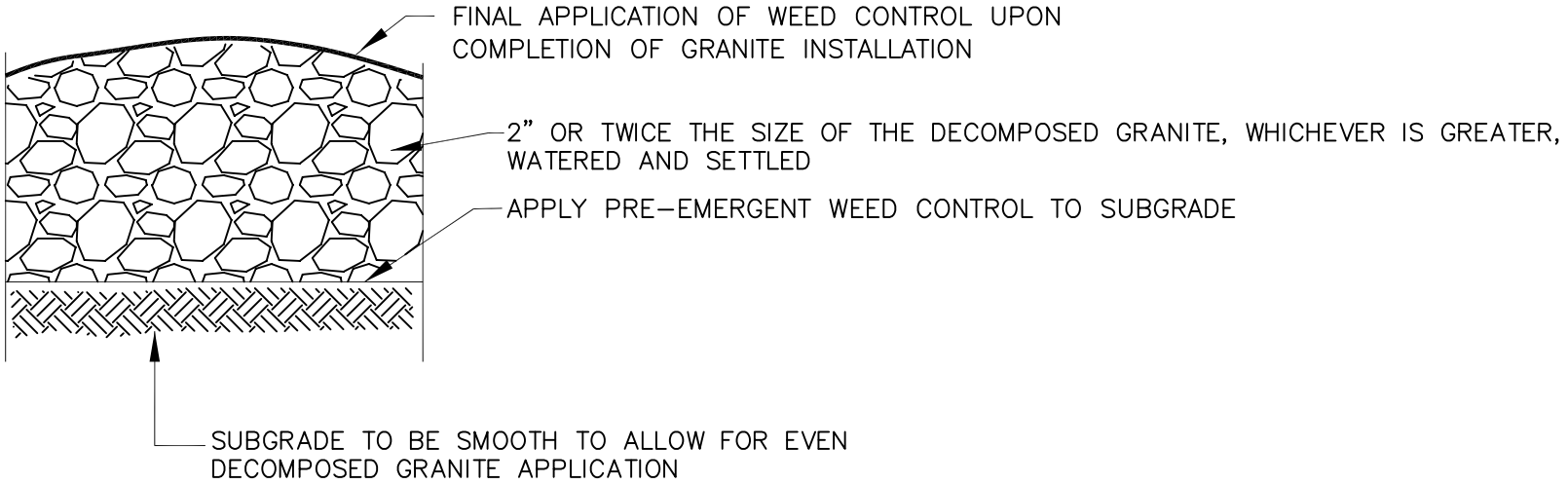


## (A) GRANITE DETAIL

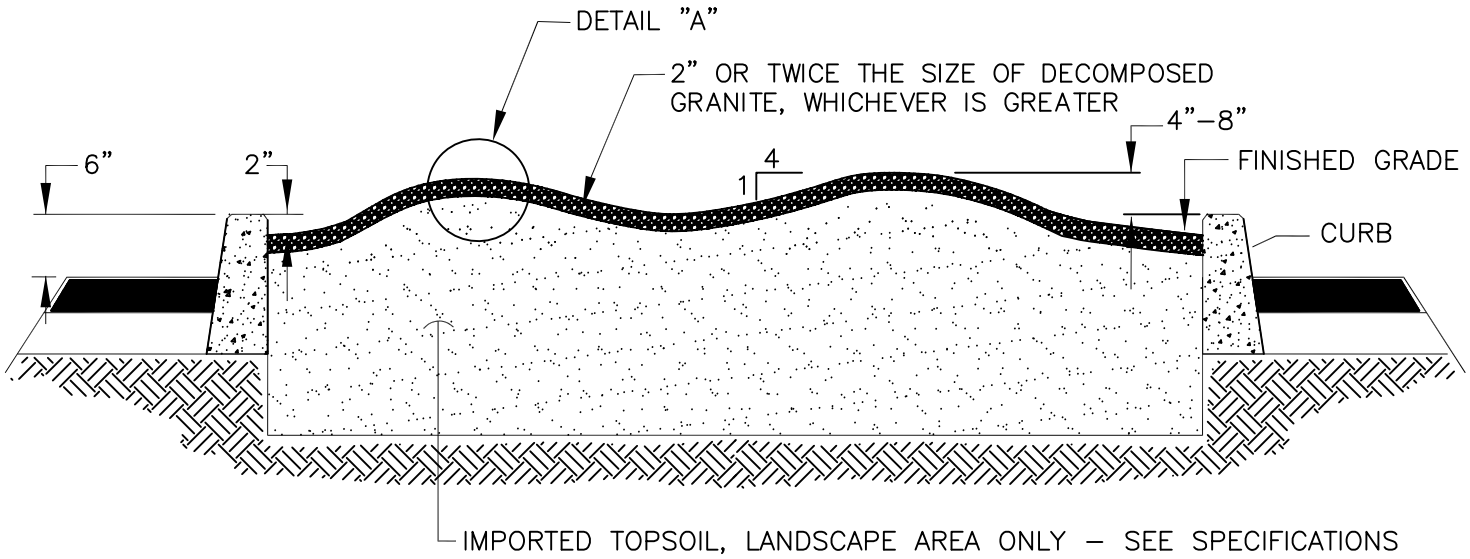


| DETAIL NO. | | | | | DETAIL NO. |
|---|---|---|---|---|---|
| **C-807** NTS | CITY OF CHANDLER STANDARD DETAIL | **MEDIAN** | APPROVED: CITY ENGINEER | DATE: 01-09-2020 | **C-807** |

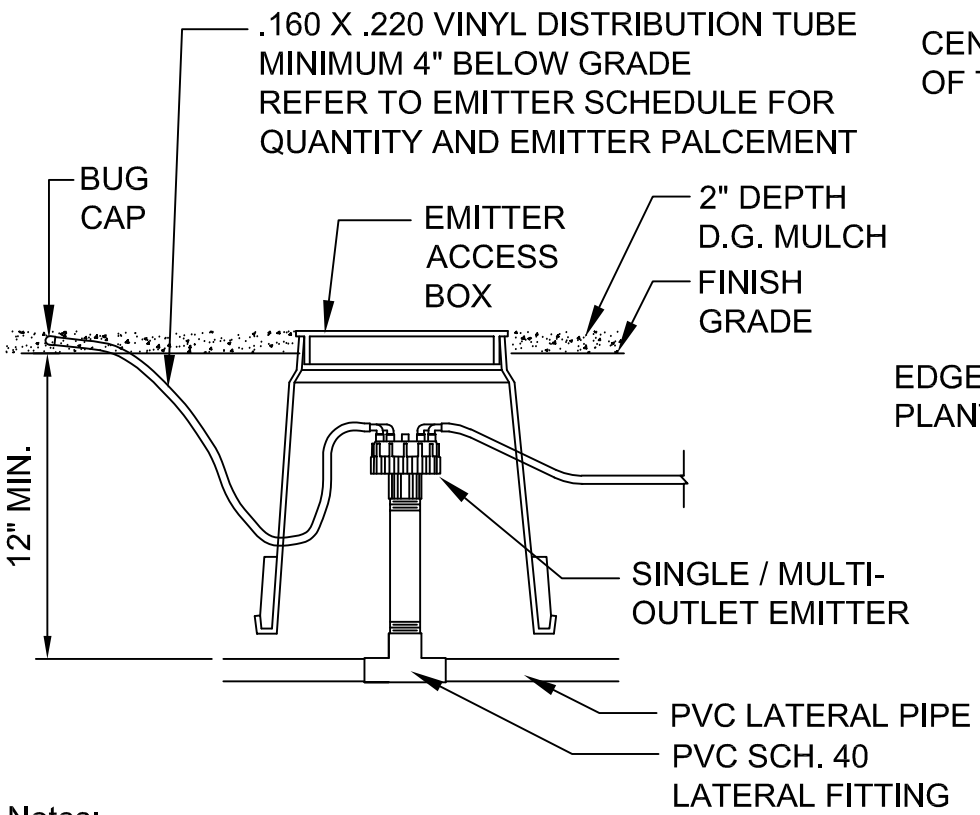


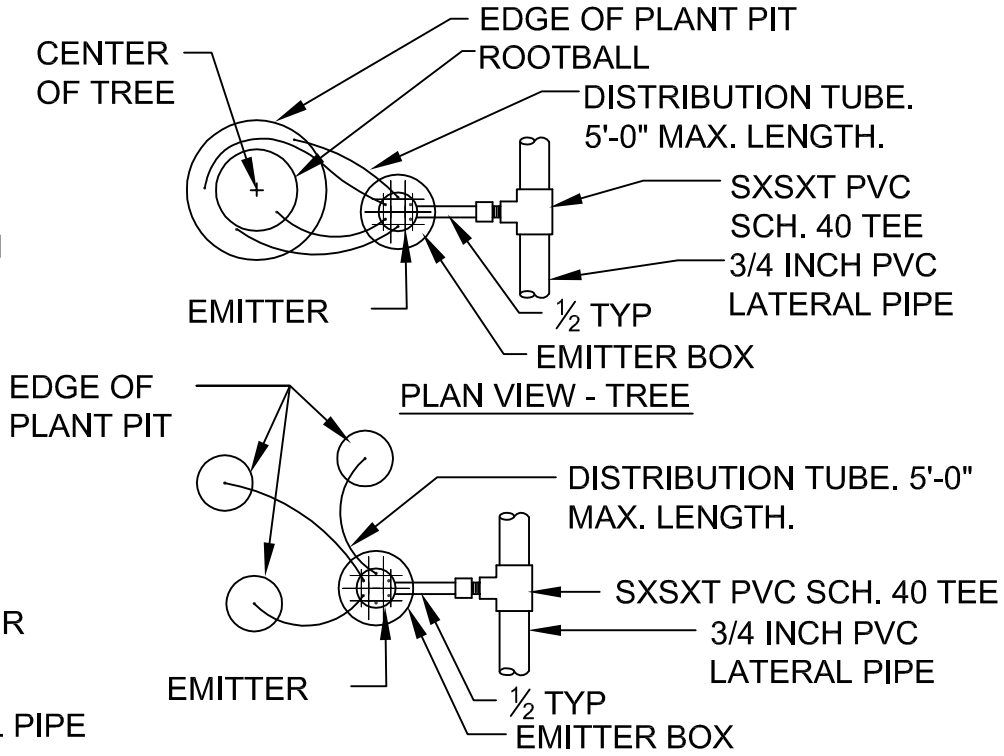


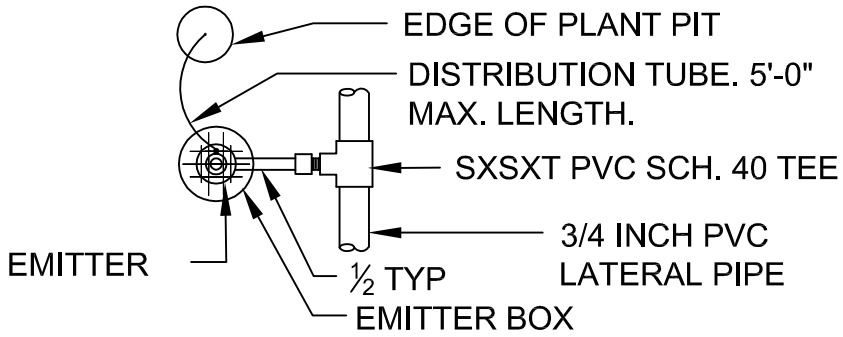


Notes:

1. Emission points shall be located uphill of plant centerline and shall deliver water directly to root ball (typ.)
2. At least one emitter tube outlet shall be located within 4" of plant centerline.
3. All basins 2" deep. Basins to be same level as plant pit.
4. Place emitter so that top edge of emitter is visible above finished grade
5. Number of openings and emitter tubes required per plant is based on plant size. See Emitter Schedule.

* Latest Revision Febuary 2012

| DETAIL NO. | | | | | DETAIL NO. |
|---|---|---|---|---|---|
| **C- 808** NTS | CITY OF CHANDLER STANDARD DETAIL | **EMITTER ACCESS BOX AND EMITTER LAYOUT** | APPROVED: CITY ENGINEER | | **C-808** |
| | | | DATE: 02/09/12 | | |

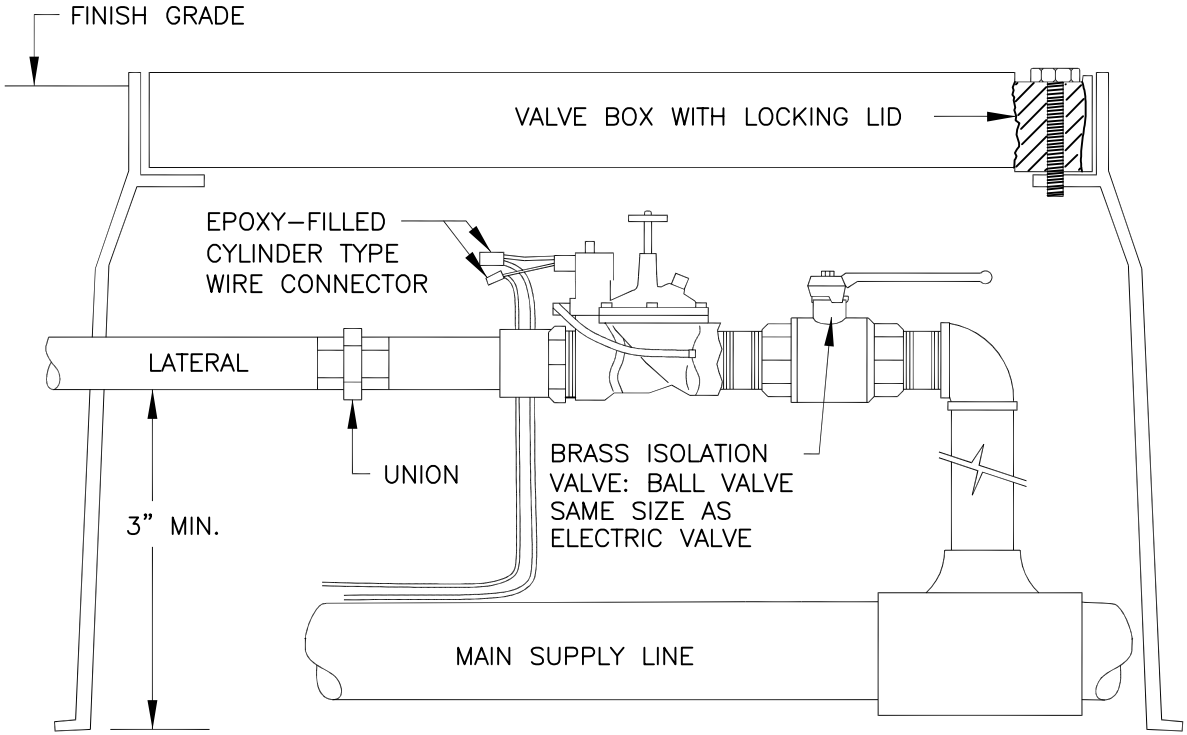


NOTES:

1. PROVIDE EXPANSION COILS AT EACH WIRE CONNECTION.
2. QUICK COUPLERS SHALL BE IN SEPERATE VALVE BOXES.
3. PEA GRAVEL SHALL BE 4" TO 6" IN DEPTH UNDER VALVE BOX.
4. ALL PVC THREADED FITTINGS SHALL BE SCHEDULE 80.

* Latest Revision Febuary 2012

| | | | | | |
|---|---|---|---|---|---|
| DETAIL NO. **C- 809** NTS | CITY OF CHANDLER STANDARD DETAIL | **REMOTE CONTROL ELECTRIC VALVE TURF** | APPROVED: CITY ENGINEER<br>DATE: 02/09/12 | DETAIL NO. **C-809** |

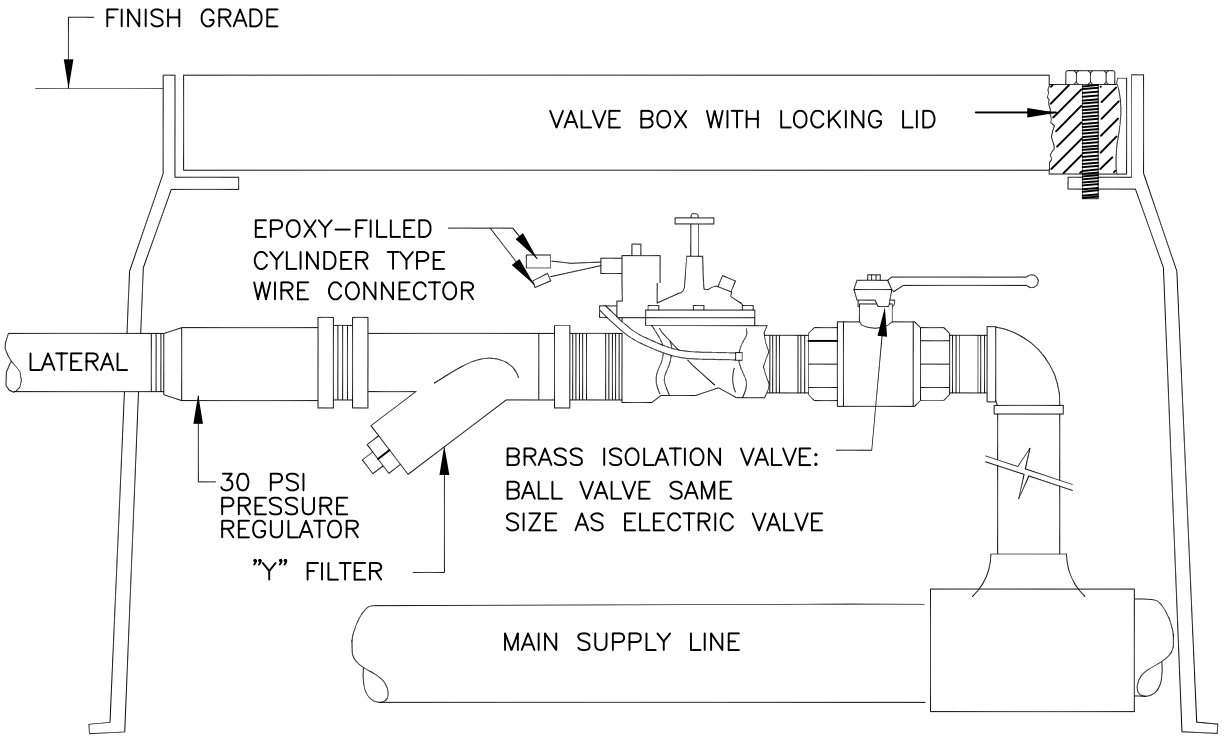


NOTES:

1. PROVIDE EXPANSION COILS AT EACH WIRE CONNECTION.
2. QUICK COUPLERS SHALL BE IN SEPERATE VALVE BOXES.
3. PEA GRAVEL SHALL BE 4" TO 6" IN DEPTH UNDER VALVE BOX.

* Latest Revision Febuary 2012

| | | | | | |
|---|---|---|---|---|---|
| DETAIL NO. **C- 810** NTS | CITY OF CHANDLER STANDARD DETAIL | **REMOTE CONTROL ELECTRIC VALVE DRIP** | APPROVED: CITY ENGINEER<br>DATE: 02/09/12 | DETAIL NO. **C-810** |

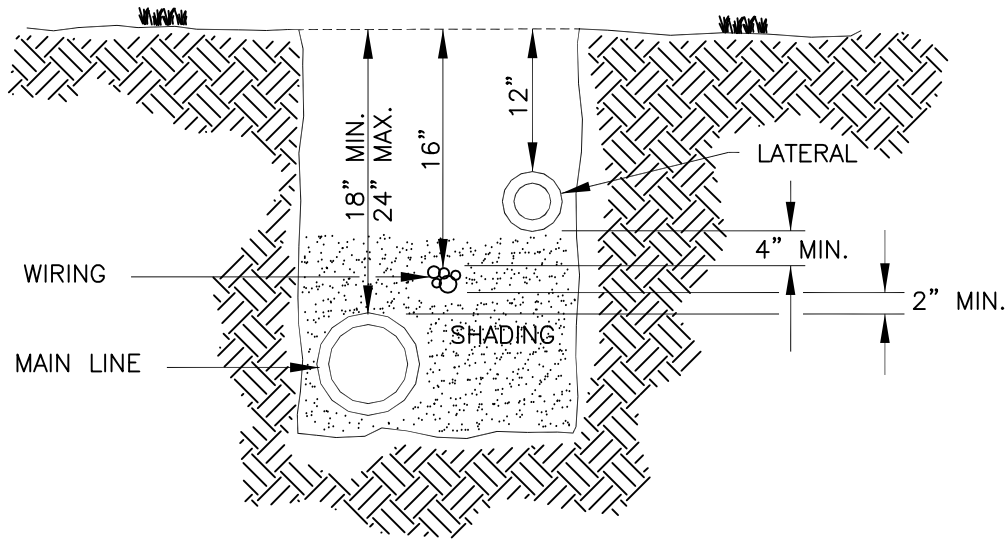


NOTES:

1. ALL PIPE INSTALLATION, TRENCH EXCAVATION, BACKFILLING AND COMPACTION SHALL CONFORM WITH MAG SEC. 440 AND 601.
2. TAPE AND BUNDLE WIRING AT 10 FEET INTERVALS.
3. SHADING SHALL BE DONE WITH NATIVE SOIL.
4. DEPTH DIMENSION MAY VARY WHERE INDICATED ON IRRIGATION PLAN.
5. ALL PIPE INSTALLED UNDER PAVED SURFACES SHALL BE PLACED IN PVC SLEEVING, 2 TIMES THE NOMINAL SIZE OF THE PIPE*.
   *ALL IRRIGATION WORK WITHIN THE PUBLIC R.O.W. REQUIRES A SEPARATE PERMIT.

* Latest Revision Febuary 2012

| DETAIL NO. | | | | | DETAIL NO. |
|---|---|---|---|---|---|
| **C- 811** NTS | CITY OF CHANDLER STANDARD DETAIL | **IRRIGATION TRENCH** | APPROVED: CITY ENGINEER<br>DATE: 02/09/12 | | **C-811** |

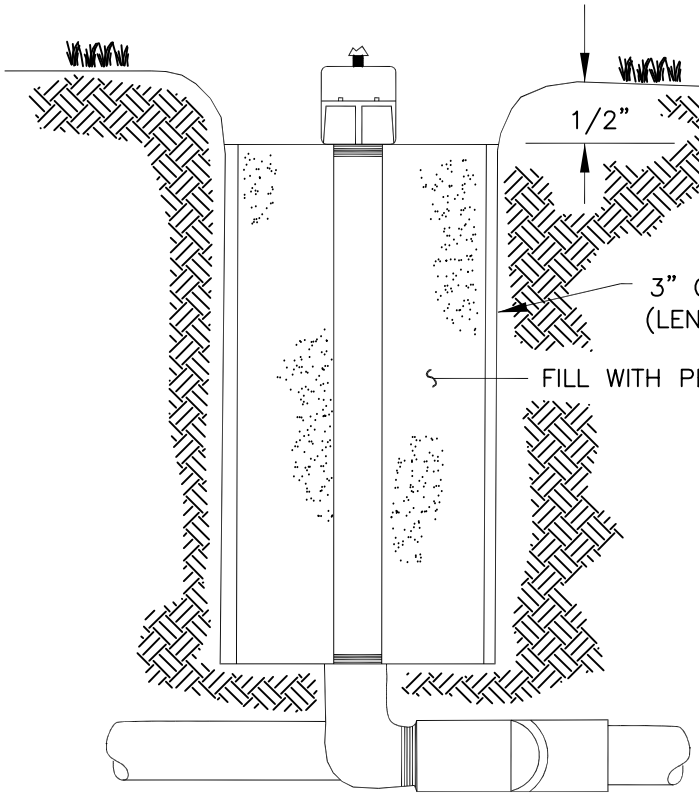


**SECTION A - A**

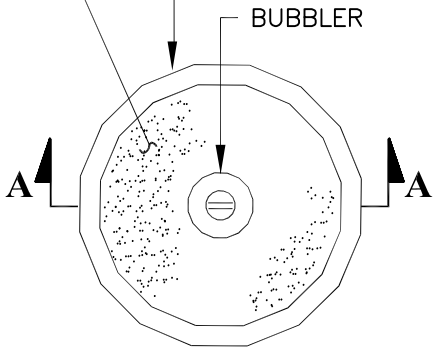


**PLAN**

* Latest Revision Febuary 2012

| DETAIL NO. | | | | | DETAIL NO. |
|---|---|---|---|---|---|
| **C- 812** NTS | CITY OF CHANDLER STANDARD DETAIL | **BUBBLER** | APPROVED: CITY ENGINEER DATE: 02/09/12 | | **C-812** |

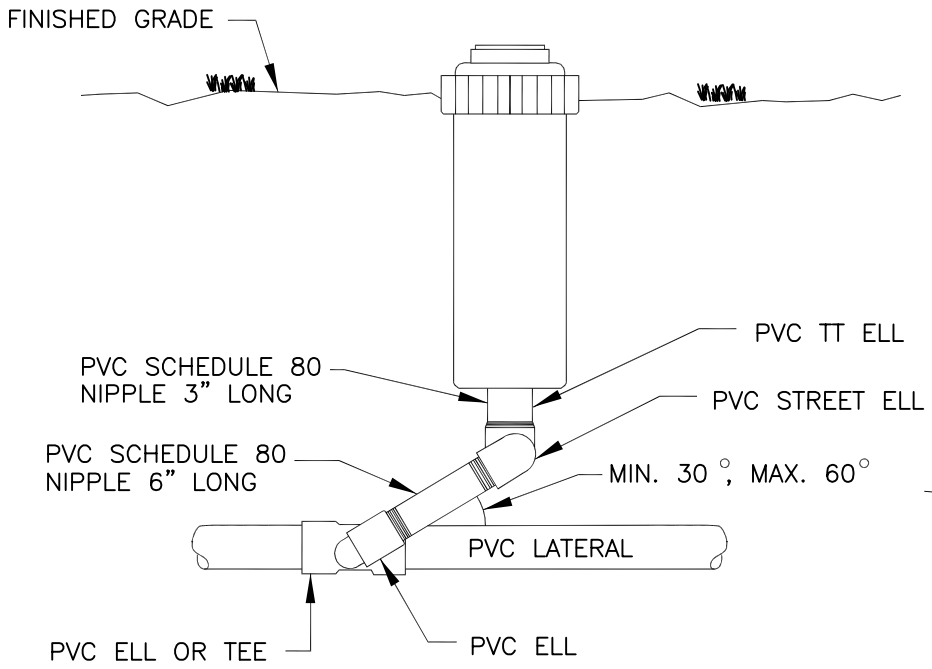


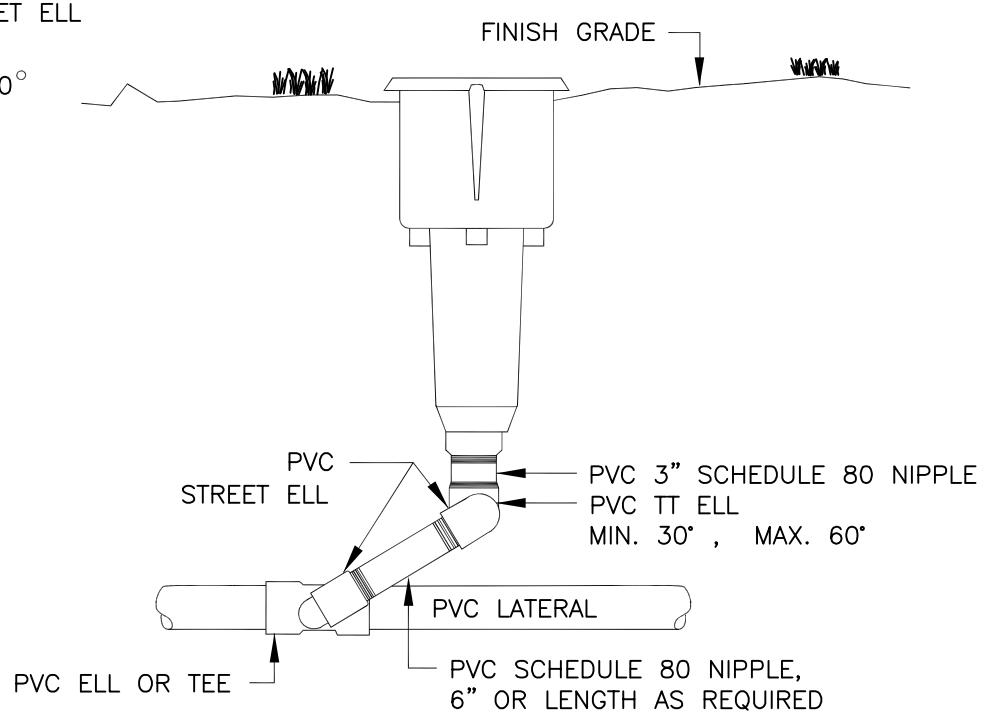


NOTES:

1. INSTALL SPRINKLER 1" ABOVE GRADE UNTIL TURF IS ESTABLISHED THEN ADJUST FLUSH TO GRADE.
2. ALL FITTINGS TO BE SCHEDULE 80.

* Latest Revision Febuary 2012

| DETAIL NO. | | | | | DETAIL NO. |
|---|---|---|---|---|---|
| **C- 813** NTS | CITY OF CHANDLER STANDARD DETAIL | **GEAR-DRIVEN POP-UP ROTOR** | APPROVED: CITY ENGINEER DATE: 02/09/12 | | **C-813** |

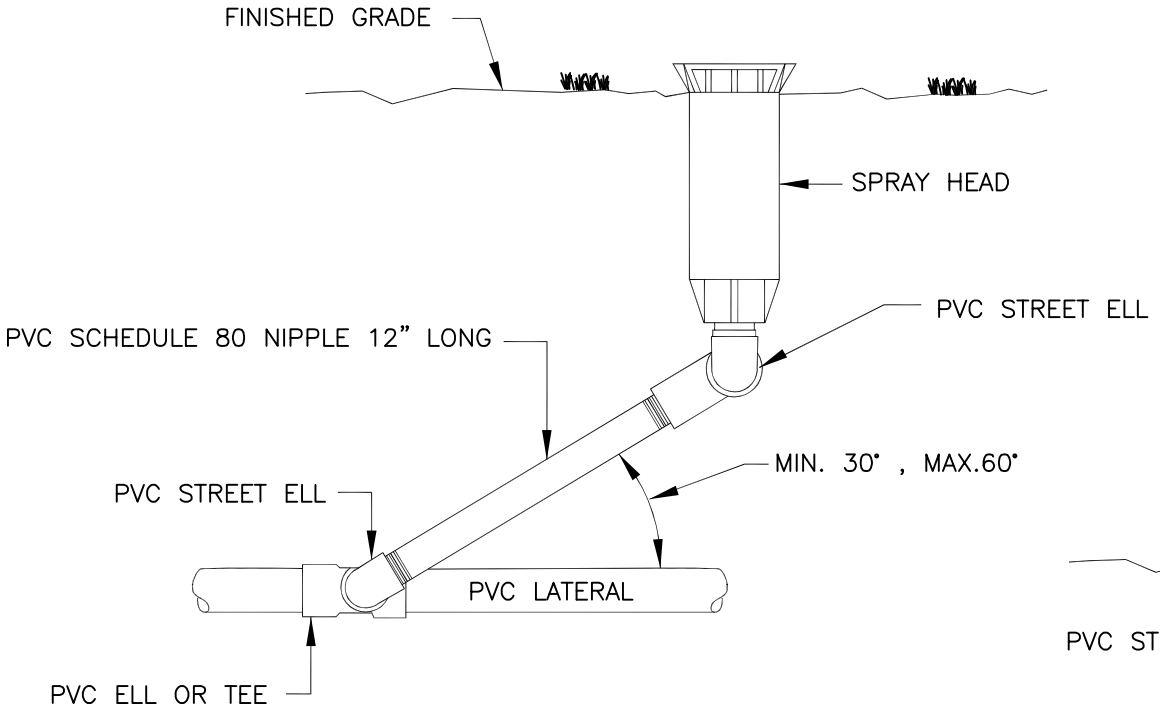


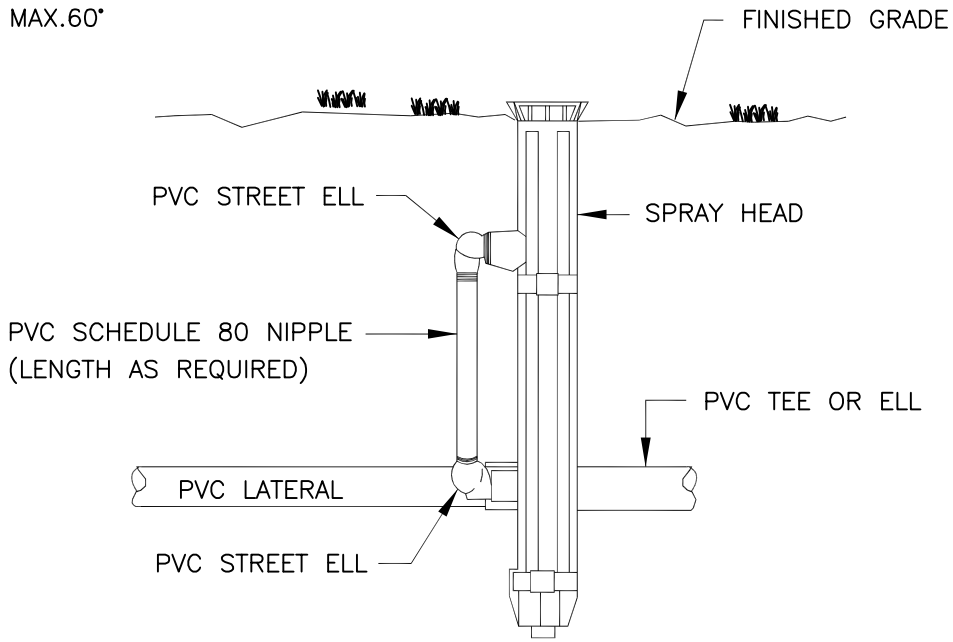


NOTE:

ALL FITTINGS TO BE SCHEDULE 80.

* Latest Revision Febuary 2012

| DETAIL NO. | | | | | |
|---|---|---|---|---|---|
| **C- 814** NTS | CITY OF CHANDLER STANDARD DETAIL | **POP-UP SPRAY HEAD** | APPROVED: CITY ENGINEER<br>DATE: 02/09/12 | DETAIL NO. **C-814** |

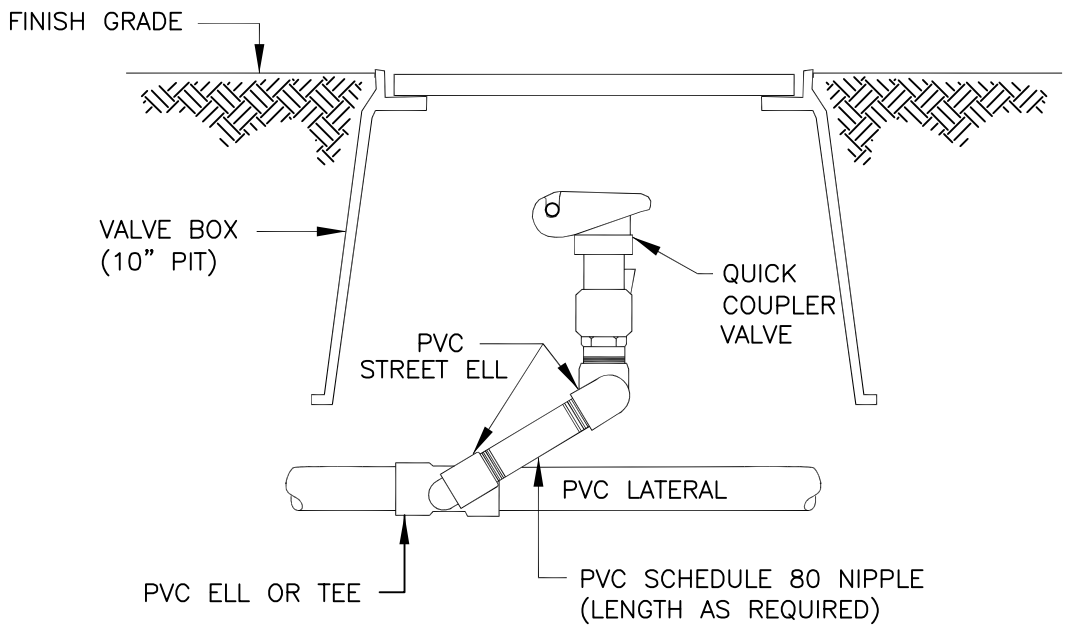


NOTES:

1. EACH QUICK COUPLER SHALL BE IN A SEPERATE VALVE BOX.
2. PROVIDE ONE (1) QUICK COUPLER KEY FOR EACH QUICK COUPLER VALVE.
3. PLACE 4" TO 6" DEPTH PEA GRAVEL UNDER VALVE BOX.
4. QUICK COUPLER SHALL HAVE LOCKING RUBBER COVER.

* Latest Revision Febuary 2012

| | | | | | |
|---|---|---|---|---|---|
| DETAIL NO. **C- 815** NTS | CITY OF CHANDLER STANDARD DETAIL | **QUICK COUPLER** | APPROVED: CITY ENGINEER<br>DATE: 02/09/12 | | DETAIL NO. **C-815** |

# IRRIGATION LEGEND

| SYMBOL | MFG. AND DESCRIPTION | QUANTITY |
|---|---|---|
| | | |

# FRICTION LOSS

PRESSURE AT SOURCE _____ P.S.I.

PRESSURE VERIFIED WITH CITY _____ P.S.I.

FRICTION LOSS THROUGH: (TO FARTHEST HEAD)

WATER METER _____ P.S.I.

VACUUM BREAKER _____ P.S.I.

MAIN LINE PIPE _____ P.S.I.

VALVE _____ P.S.I.

LATERAL LINE PIPE _____ P.S.I.

TOTAL FRICTION LOSS _____ P.S.I.

REQUIRED PRESSURE AT HEAD _____ P.S.I.

(TOTAL FRICTION LOSS)+(REQUIRED P.S.I. AT HEAD) = PRESSURE REQUIRED AT SOURCE _____ P.S.I.

CALCULATIONS PERFORMED BY _____ _____

SIGNED DATE

* Latest Revision Febuary 2012

| DETAIL NO. | | | | | DETAIL NO. |
|---|---|---|---|---|---|
| C- 816 NTS | CITY OF CHANDLER STANDARD DETAIL | TYPICAL IRRIGATION LEGEND AND INFORMATION | APPROVED: CITY ENGINEER | DATE: 02/09/12 | C-816 |

## A - EMITTER SCHEDULE FOR TREES, SHRUBS, GROUNDCOVERS AND ACCENTS

| PLANT SIZE | TYPE OF EMITTER | NUMBER OF EMITTERS | GALLONS PER HOUR PER PLANT |
|---|---|---|---|
| 1 GALLON | SINGLE OR MULTI | 1 | .6 or 1 |
| 5 GALLON | SINGLE OR MULTI | 1 | .6 or 1 |
| 15 GALLON | MULTI | 4 | 4 |
| 24" BOX | MULTI | 4 | 4 |
| 30" BOX | MULTI | 6 | 6 |
| 36" BOX | MULTI | 6 | 6 |
| 48" BOX | MULTI | 6 | 6 |

## B - BUBBLER SCHEDULE FOR PALMS

| TRUNK DIAMETER AT GRADE | NUMBER OF BUBBLERS |
|---|---|
| 12 – 24" | 2 |
| 25 – 32" | 2 |
| 33 – 36" | 2 |

## C - CACTUS

DO NOT PROVIDE IRRIGATION TO CACTUS

NOTES:

1. REFER TO EMITTER AND BUBBLEER DETAILS FOR SPECIFICATIONS AND LAYOUT INFORMATION.
2. ADJUST IRRIGATION OPERATING TIMES TO ACCOMMODATE PLANT MATURITY, SOIL TYPE, PLANT EXPOSURE AND SEASONAL REQUIREMENTS.

* Latest Revision Febuary 2012

| DETAIL NO. | | | | | DETAIL NO. |
|---|---|---|---|---|---|
| C- 817 NTS | CITY OF CHANDLER STANDARD DETAIL | EMITTER-BUBBLER SCHEDULE | APPROVED: CITY ENGINEER DATE: 02/09/12 | | C-817 |