STANDARD DETAILS AND SPECIFICATIONS

CHANDLER
arizona

January 2020

Table of Contents

321* ASPHALT CONCRETE PAVEMENT....1

336* PAVEMENT MATCHING AND SURFACING REPLACEMENT....2

340 CONCRETE CURB, GUTTER, SIDEWALK, SIDEWALK RAMPS, DRIVEWAY, AND ALLEY ENTRANCE....3

345* ADJUSTING FRAMES, COVERS AND VALVE BOXES....4

360 TELECOMMUNICATIONS INSTALLATION....5

401 TRAFFIC CONTROL....6

450 GUIDED BORE CONSTRUCTION....7

601* TRENCH EXCAVATION, BACKFILLING, AND COMPACTION....9

608 HORIZONTAL DIRECTIONAL DRILLING....10

610 WATERLINE CONSTRUCTION....11

616 RECLAIMED WATERLINE CONSTRUCTION....15

625* MANHOLE CONSTRUCTION AND DROP SEWER CONNECTIONS....16

630 TAPPING SLEEVES, VALVES AND VALVE BOXES ON WATERLINES....17

751 POLYVINYL CHLORIDE (PVC) PRESSURE PIPE....18

*SECTION 321

ASPHALT CONCRETE PAVEMENT

321.8 PLACEMENT is changed to add:

321.8.11 Preservative Seal An asphalt emulsion surface sealer per Section 718.3 shall be required on streets other than arterials and shall be applied immediately prior to the end of the construction warranty period.

*SECTION 336

PAVEMENT MATCHING AND SURFACING REPLACEMENT

336.1 DESCRIPTION: is changed to read:

Asphalt concrete pavement replacement shall be constructed in accordance with ”T-Top” Trench Repair per Detail 200, as indicated on the plans, and as required by Sections 321 and 710.

Asphalt concrete shall be EVAC mix.

Permanent pavement replacement shall include crack and joint sealing per Detail 200 unless otherwise directed by Street Superintendent.

This item shall include the installation of pavement marking and reflective pavement markers to restore the surface to the condition prior to construction.

336.5 PAYMENT: is changed to add:

There will be no additional payment for the installation of pavement marking and reflective pavement markers.

SECTION 340

CONCRETE CURB, GUTTER, SIDEWALK, SIDEWALK RAMPS, DRIVEWAY, AND ALLEY ENTRANCE

340.2.1 Detectable Warnings is changed to add:

Refer to the *List of Approved Products* for approved detectable warning systems.

340.3 CONSTRUCTION METHODS is changed:

The last sentence of the second paragraph of this section shall read (applies to expansive soils only):

The subgrade shall then be compacted to relative density of 80% minimum to 90% maximum at a moisture content within 3% of optimum.

*SECTION 345

ADJUSTING FRAMES, COVERS AND VALVE BOXES

345.5 ADJUSTING MANHOLE AND VALVE COVERS WITH ADJUSTING RINGS first paragraph is changed to read:

Adjusting rings may be used to raise manhole frames and covers in asphalt pavements. The amount of adjustment, thickness of seal or overlay, and cross slope will be considered when using adjusting rings. Each location where an adjusting ring is used must have a sufficient depth of asphalt to assure the proper installation and operation of the ring. For manholes serving public sewer mains 15-inch diameter and larger, rings shall be made of a composite material per City's List of Approved Products and installed per the manufacturer's specifications. "One-off" manholes (first manhole up-stream of 15-inch diameter and larger sewer mains) shall also use composite rings. Manholes serving sewer mains smaller than 15-inch diameter may use concrete, or composite rings installed per the manufacturer's specifications.

SECTION 360

TELECOMMUNICATIONS INSTALLATION

360.3 CABLE INSTALLATION:

(A) Trunk Lines (2), second sentence is changed to read:

The cable shall be placed within a steel casing at a minimum depth of 48 inches.

(B) Telecommunications cables other than "trunk lines" depth of placement is changed according to the following schedule:

Location	Depth of Placement
Arterial Street	48 Inches
Collector Street or Industrial Area	36 Inches
All Others	36 Inches

SECTION 401

TRAFFIC CONTROL

401.4 TRAFFIC CONTROL MEASURES is changed to add:

At areas where striping obliteration has occurred, the roadway surface shall be sealed with a slurry seal product approved by the City. Refer to the *List of Approved Products*. The product shall be thoroughly mixed with #30 mesh sand conforming to Section 701 at a rate of two pounds per gallon prior to application. Application shall be made on the area of striping obliteration by means of a squeegee.

Striping obliteration by grinding is not permitted.

SECTION 450

GUIDED BORE CONSTRUCTION

450.1 DESCRIPTION:

This work shall consist of installing a conduit by guided bore.

450.2 CONSTRUCTION:

Prior to construction, the contractor shall submit for approval a location plan and profile of the work in accordance with COC Detail C-112.

Only approved slurry boring methods shall be allowed. Water jetting shall not be substituted for slurry boring. All pneumatic boring shall be at a minimum depth of 36 inches below pavement surface.

Uncased guided bore holes shall be at a depth below finish grade no less than four times the diameter of the hole. Uncased guided bore holes shall be limited to a maximum of 12 inches. Bore holes in excess of 12 inches in diameter shall be cased, unless otherwise approved by the Engineer. Contractor shall stipulate the size of bore on the permit application.

Over drilling or final reaming of uncased guided bores should be limited to no more than one inch over the maximum cross section of the conduit bank, casing, or pipe. Annular spaces exceeding this requirement shall be pressure grouted.

Guided bore methods shall minimize over-reaming or over-drilling of holes. Fluids shall not cause scour of the bore hole beyond the previously noted tolerance. Controlled fluid boring is preferred and should utilize fluids to remove cuttings, stabilize and lubricate bore holes, soften soils for advancing bores, provide directional control of guided bores, and for cooling of drilling equipment. Uncontrolled jetting, where the primary purpose is to use fluid pressure to erode soil for creation of the final bore hole diameter, is prohibited. Methods which vary from these requirements shall require demonstration and shall have a history of successful use prior to acceptance. Any method utilized shall not disturb the soils outside the final bore hole diameter.

SECTION 450

Unless site specific soil information is available indicating otherwise, caving of soils around bore holes should be assumed. Pipe, case, or conduit banks should be advanced during final reaming.

Guided bores through unstable granular soils and granular utility backfill should be stabilized with a pressurized bentonite slurry drilling fluid having a consistency of at least one pound of bentonite to five gallons of water, or an approved equal. The flow rate and applied pressure shall be monitored. A sudden loss of pressure indicates that slurry may be intruding excessively into the backfill. Cased bores may be used in lieu of stabilization.

Equipment operators shall observe the bore hole and monitor cuttings for excessive soil removal. When evidence of excessive voids are found, bore holes shall be pressure grouted after placement of pipe, casing, or conduit banks.

*SECTION 601

TRENCH EXCAVATION, BACKFILLING, AND COMPACTION

601.2.9 Shoring and Sheathing: is changed to add:

When vertical side walls are to be excavated and trench boxes are not used, the contractor shall do such trench bracing, sheathing, or shoring necessary to perform and protect the excavation as required for safety and conformance to governing laws. Shoring, sheeting, or other protective procedures reviewed by the Engineer or his designee for conformance to standards shall be required when the trench depth exceeds five feet. The contractor shall provide a shoring and bracing plan designed by his engineer for review for adherence to OSHA requirements. Spacing of shoring braces shall not exceed ten feet center to center.

601.2.10 Open Trench: the third paragraph is changed to add:

Steel plates shall be installed in accordance with Detail 211. Where the steel plates are restrained by temporary asphalt, they may be required to be spot-welded together for any period of time that the contractor is not present to adjust for their longitudinal movement due to traffic.

601.4.5: Final Backfill: the third paragraph is changed to read:

Backfill under street pavement shall be half-sack CLSM per Section 728 and be constructed per Detail 200, ”T-Top” pavement replacement unless otherwise stated on the construction plans or special provisions. Pavement matching and surface replacement shall be in accordance with Section 336.

SECTION 608

HORIZONTAL DIRECTIONAL DRILLING

608.4.4 Bore Plan/Profile: is changed to add:

The City requires a Bore Plan/Profile to be submitted per the City of Chandler Utility Permit Manual, UDM-148, Exhibit D – Plan review Checklist and EXHIBIT I – Directional and Hog Drilling – Bore and the Directional Drilling Checklist.

SECTION 610

WATERLINE CONSTRUCTION

610.3 MATERIALS: is changed to read:

Pipe shall be ductile iron pipe in accordance with Section 750 or polyvinyl chloride (PVC) in accordance with COC Supplement Section 751 - PVC Pressure Pipe.

610.4 CONSTRUCTION METHODS: is changed to add:

All pipe shall be bedded in accordance with COC Detail C-308 and installed in accordance with the latest revision of AWWA C600.

Polyvinyl Chloride pipe shall be installed in accordance with the AWWA Manual 23.

For all pipe materials, locator wire and marking tape shall be installed in accordance with COC Detail C-408.

City water valves shall only be operated by City staff. The City requires a minimum 48-hour notice for water system shutdowns. The Contractor is required to notify affected customers a minimum of 24-hours prior to shutdowns. Businesses may require after hours shutdowns. Shutdown of City system valves does not guarantee stoppage of continuous flow of water. The Contractor shall be responsible for dewatering and isolating the system; have all necessary equipment, materials,& personnel to perform the work; maybe required to utilize a pump to address any flows in the system; and is responsible to install 2-inch taps to relieve pressure in the system Line stops are only permitted when flows after shutdown cannot be controlled with a pump. Shutdowns may require the use of valves outside the project limits.

A Maintenance of Plant Operations Plan (MOPO) may be required for review and approval by the City. The MOPO is required to be submitted to the City at the project preconstruction meeting. A MOPO requires sufficient detail on the required sequencing to ensure the continuous operation of the existing water system and numerous services that are fed by the system in the project limits. These include individual water services, fire hydrants, pipeline feeds, and fire department connections. The plan is required to include an exhibit identifying the system

valves needed for isolation of water flows. This may include valves outside the project limits.

The MOPO shall at a minimum include plan sheets and written descriptions addressing the following:

- The timing and method for each waterline tie-in (sequencing and staging);
- The Contractor shall research and account for all City Geographic Information System, as-builts, and pothole information related to the water system in the project area;
- Existing and proposed valve locations;
- The method of keeping existing line functioning prior to connecting water services, fire hydrants, pipeline feeds, and fire department connections to the new waterline. This may include temporary tie-ins, temporary valving, and temporary thrust restraints. Line stops are only permitted when 100% shutdown cannot occur within the project limits;
- The detailed schedule for overall installation of the waterline and abandonment of existing waterline. The schedule shall align with the overall project schedule and sequencing plan;
- The timing and method of removal of temporary improvements necessary for providing continuous water service such as temporary tie-ins, temporary valving, and temporary thrust restraint;
- For projects with Federal funding, Buy America (Public Law 112-141, MAP 21; 23 USC 313; and 23 CFR 635.410) applies to all materials used in the project. The Contractor shall anticipate and accommodate additional lead times in the project schedule due to Buy America requirements.

610.7 VALVES: is changed to read:

All gate valves shall conform to the latest revisions of AWWA C509 or C515 standards.

Gate valves for buried service shall be the non-rising stem (NRS) type.

Direction of opening shall be counterclockwise (Open Left).

SECTION 610

The body and bonnet of the valves shall be constructed of ductile-iron per ASTM A536.

The marking “D.I.” or “Ductile Iron” shall be cast in raised letters on the valve.

Valve body, bonnet, and stuffing box shall be coated and lined with fusion-bonded epoxy conforming to the AWWA C550 standard.

Valve stem diameters and minimum turns to open shall conform to Table 7 in AWWA C509-09 and AWWA C515-09.

The NRS-type valve stems shall be made of bronze or stainless steel~~s~~. Bronze stems shall use copper alloys that contain less than 6% zinc and 6% aluminum. Stainless steel stems shall contain not less than 15% chromium and be from the 300 or 400 alloy series.

NRS stems must have a thrust collar that is integral with the stem in accordance with section 4.4.5.3 of AWWA C515-09. Thrust collars that are non-integral with the stem are not acceptable.

Valve wedge must be completely encapsulated with EPDM rubber, symmetrical in design, and seat equally well with flow in either direction.

Gate valves four inches and larger shall be equipped with male-type wedge guides and polymer guide covers. Wedges employing female-type designs are not acceptable.

All gaskets shall be pressure-energized type such as O-rings.

The top two stem O-rings must be replaceable while fully open and while subject to full rated working pressure. O-rings set in cartridges are not allowed.

Valves shall be equipped with stainless steel bolting that meets the requirements of ASTM F593 Standard Specifications for Stainless Steel bolts, Type 304, Alloy group 1, CW condition, and ASTM F594 Standard Specification for Stainless Steel Nuts, Type 304, Alloy group 1, CW Condition.

Bolt head and nuts shall be hexagonal shaped with dimensions conforming to ANSI B18.2.1. Metric sized and recessed socket head bolts, are not allowed.

Operating nuts shall be 2 inches square.

Valves shall be NSF Certified to Standard 61.

All valves 2 inches to 48 inches:

Valves may be used in either the horizontal or vertical positions.

Valve gearing shall be in accordance with Table 9 of AWWA C515-09 or C509-09 Standard.

610.13 METER SERVICE CONNECTIONS: is changed to add:

(E) Service taps shall be installed using an all bronze double-strap tapping saddle or a tapped tee. Any tapping saddle for use on PVC pipe shall provide full support around the circumference of the pipe and a bearing area for 2 inches minimum along the axis of the pipe.

SECTION 616

RECLAIMED WATERLINE CONSTRUCTION

616.2 MATERIALS: is changed to read:

Valve boxes shall be in accordance with Section 345, this Section, Detail 391 and COC Detail C-406.

616.3 INSTALLATION: is changed to add:

Pipe will be bedded in accordance with COC Detail C-308 and identified in accordance with C-408.

*SECTION 625

MANHOLE CONSTRUCTION AND DROP SEWER CONNECTIONS

625.2 MATERIALS is changed to add:

Composite manhole frame and cover per City's *List of Approved Products*.

Composite adjustment rings per City's *List of Approved Products*.

Corrosion-protective coating per City's *List of Approved Products*.

Pesticide coating per City's *List of Approved Products*.

625.3.1 Manholes is changed to add:

Manholes shall be 5-foot diameter with 30-inch frames and covers. Manholes serving public sewer mains 15-inch diameter and larger shall be installed with corrosion-protective materials per City's List of Approved Products. "One-off" manholes (first manhole up-stream of 15-inch diameter and larger sewer mains) shall also use corrosion-protective materials. For sewer mains less than 15-inch, manholes may be installed using standard concrete materials per Detail 420 with cast-in-place bases.

Corrosion protective manholes shall include composite frames and covers, composite adjustment rings, composite or polymer concrete cone and riser sections and cast-in-place bases. Refer to City's List of Approved Products. Corrosion-protective manholes shall be as specified on the plans and/or special provisions.

Manhole adjustment shall be constructed with a minimum of 12" and a maximum of 18" high adjusting rings per City Detail C-401.

Manholes serving public sewer lines 15-inch and smaller and not within arterial streets shall be coated with a latex insecticide coating applied in accordance with the manufacturer's recommendations. Refer to the City's List of Approved Products for allowable insecticide coating products. The coating shall be applied in accordance with US Environmental Protection Agency recommendations starting from the top of the manhole to a depth of 8 feet below. Minimum coating thickness shall be 0.25 mil.

SECTION 630

TAPPING SLEEVES, VALVES AND VALVE BOXES ON WATERLINES

630.2 GENERAL: is changed to add:

Potable water valve boxes shall conform to Detail 391, Type 'C', deep skirted lid type and COC Detail C-307.

Reclaimed water valve boxes shall conform to Detail 391, Type 'C', deep skirted lid type with a square surface box and COC Detail C-406.

630.3 GATE VALVES: is changed to add:

The connecting ends of valves may be flange, mechanical joint, push-on, or an appropriate combination. Valves which require transition gaskets to ductile iron pipe sizes may be furnished only in sizes 4 inches through 8 inches.

630.4.2 Tapping Sleeves Subsection (A) (2) (a) is changed:

Following the word Cast Iron, add

(Not allowed for use on PVC pipe).

SECTION 751

POLYVINYL CHLORIDE (PVC) PRESSURE PIPE

751.1 GENERAL:

These specifications apply to Polyvinyl Chloride (PVC) pressure pipe intended for use as potable, wastewater, and reclaimed water distribution pipelines, which carry water under pressure.

751.2 WORKMANSHIP:

Pipe shall be homogeneous throughout. It shall be free of voids, cracks, inclusions, or other defects. It shall be as uniform as commercially practical in color, density, and other physical properties. Pipe surfaces shall be free from nicks and scratches. Joining surfaces of spigots and other joints shall be free from gouges and imperfections that could cause leakage. The contractor shall supply the Engineer with certified third party test data establishing both the long-term compressive strength and the long-term modulus of elasticity of the PVC material.

751.3 MATERIAL:

4 inch through 12 inch PVC pressure pipe shall be designed, manufactured and tested in accordance with AWWA C900, latest edition. The barrel of furnished pipe shall conform to the outside dimensions of steel pipe (IPS) or cast-iron-pipe-equivalent (CI), and with the wall thickness of dimension-ratio (DR) Series 14. All approved PVC pipe shall carry a NSF rating.

The pressure rating for C900 pipe shall be 200 psi minimum.

16 inch and larger PVC pressure pipe shall be designed, manufactured, and tested in accordance with AWWA C905, latest edition. The barrel of furnished pipe shall have an iron-pipe-size-equivalent (IPS) outside diameter and wall thickness equal to the dimension-ratio (DR) Series 18.

The pressure rating for C905 pipe shall be 235 psi.

All PVC pipe furnished shall be integral bell with elastomeric gaskets. Plain ends with elastomeric gasket couplings will be allowed only for intermediate pipe

lengths. PVC joints using elastomeric gaskets to achieve the pressure seal shall be tested as assembled joints and shall meet the laboratory performance requirements specified in ASTM D3139.

A Manufacturer's Affidavit for compliance to AWWA C900 and AWWA C905 shall be furnished. The manufacturer shall provide documentation of the long-term compressive strength of the pipe material, or the long-term hydrostatic design strength, which shall be certified by an independent third party.

All required manufacturing quality control inspection and testing shall be performed in the United States of America at the pipe manufacturer's plant or at an approved testing laboratory in the United States. The seal of the testing agency that verified the suitability of the pipe material for potable water service shall be marked on the pipe. In addition, markings on the pipe shall include the following:

Nominal size and OD base

Material code designation

Dimension ratio number

AWWA pressure class

AWWA designation number for this standard

Manufacturer's name or trademark and production record code.

Pipe shall be supplied within 270 days of its manufacture. A Manufacturer's written Verification of date of manufacture shall be provided.

751.4 APPLIED LOAD CALCULATIONS:

Assumption of soil arching shall not be used in calculation embankment loads over PVC pipe. The prism earth load formula shall be used to determine earth loads.

$$Wc = HwBc$$

Where:

Wc = Embankment Load, lbs/ft
H = Depth of soil cover, ft
w = Soil Density, lbs/ft
Bc = Pipe outside diameter, ft

751.5 BEDDING:

Pipe bedding shall be in conformance with COC Detail C-308. Bedding shall consist of ABC in conformance to Section 702.

751.6 FITTINGS:

Fittings shall be ductile iron and conform to AWWA C110 or C153 for 250 psi minimum working pressure rating.

All fittings shall be cement lined in accordance with AWWA C104.

Fittings which require transition gaskets to ductile iron pipe sizes may be furnished only in sizes 6 inch through 8 inch.

PVC connections to asbestos cement or ductile iron pipe shall be ductile or gray iron adapters.

751.7 STORAGE:

Storage of PVC pipe shall be in accordance with the manufacturer's recommendation and guidelines. PVC pipe and fittings shall be stored in a dry, ventilated area that protects the pipe form UV radiation and the elements. Pipe stockpiled at the construction site shall not remain exposed to the elements and weather in excess of 24 hours, or as approved by the Engineer.

PVC pipe shall be delivered to the site and stored and handled in accordance with the manufacturer's instructions. During shipment and storage, the pipe ends shall be securely covered. PVC pipe shall be stored in a manner such that it is protected from exposure to sunlight and/or extreme heat.

751.8 THRUST BLOCKS:

Thrust blocks shall be installed per Section 610.14.

C-100 SERIES: GENERAL INFORMATION

Detail	Revised	Title
C-100	DEL	HAZARD MARKER PLACEMENT
C-103	2009	FIBER OPTIC CABLE SPLICING VAULT
C-104	2011	FIBER OPTIC CABLE DUCTS
C-105	2009	GUARD POST FOR BACKFLOW PREVENTION ASSEMBLIES
C-108	1999	AIR GAP BACKFLOW PROTECTION FOR WATER TANKS
C-109	DEL	USE DOUBLE - RING INFILTROMETER
C-110	DEL	USE MAG STD DTL 200
C-111	2011	MINIMUM POTHOLE SPACING FOR PAVEMENT RESTORATION FEE EXEMPTION
C-112	2018	ENGINEERED UTILITY BORE
C-113	2015	TRASH RECEPTACLE ENCLOSURE

C-200 SERIES: STREETS

Detail	Revised	Title
C-200	2018	STANDARD UTILITY LOCATIONS - ARTERIAL STREETS
C-201	2018	STANDARD UTILITY LOCATIONS - COLLECTOR STREETS
C-202	2018	STANDARD UTILITY LOCATIONS - LOCAL STREETS
C-203	2018	MAJOR ARTERIAL STREET - TYPICAL CROSS SECTION
C-204	2018	PHASED MAJOR ARTERIAL STREET - TYPICAL CROSS SECTION
C-205	2018	MINOR ARTERIAL STREET - TYPICAL CROSS SECTION
C-206	***2020***	***COLLECTOR STREET WITH MEDIAN - TYPICAL CROSS SECTION***
C-208	***2020***	***INDUSTRIAL COLLECTOR STREET - TYPICAL CROSS SECTION***
C-209	***2020***	***COLLECTOR BOULEVARD-TYPICAL CROSS SECTION***
C-210	***2020***	***COLLECTOR STREET - TYPICAL CROSS SECTION***
C-211	***2020***	***LOCAL STREET WITH MEDIAN - TYPICAL CROSS SECTION***
C-212	***2020***	***LOCAL BOULEVARD WITH FRONTAGES LESS THAN 65' TYPICAL CROSS SECTION***
C-213	***2020***	***LOCAL STREET - TYPICAL CROSS SECTION***
C-214	2014	PRIVATE SHARED DRIVEWAY - TYPICAL CROSS SECTION WITH UTILITIES
C-215	***2020***	***ON-STREET PARKING - TYPICAL CROSS SECTION***
C-221	***2020***	***LOCAL BLVD WITH FRONTAGES OF 65' TO 90'-TYPICAL CROSS SECTION***
C-222	***2020***	***LOCAL BLVD - WITH FRONTAGES GREATER THAN 90' - TYPCIAL CROSS SECTION***
C-223-1	2007	STANDARD MAJOR ARTERIAL/MAJOR ARTERIAL INTERSECTION RIGHT-OF-WAY, AND STREET DIMENSIONS
C-223-2	2013	ULTIMATE MAJOR ARTERIAL/MAJOR ARTERIAL INTERSECTION RIGHT-OF-WAY, STREET DIMENSIONS
C-224	***2020***	***MAJOR ARTERIAL DECELERATION LANE***
C-225-1	2018	GENERAL MEDIAN DESIGN
C-225-2	2018	GENERAL MEDIAN DESIGN

C-200 SERIES: STREETS (CONTINUED)

Detail	Revised	Title
C-226	2018	"LEFT IN ONLY" MEDIAN DESIGNS
C-227	2018	LEFT TURN BAY IN 40' MEDIAN DESIGN < PREVIOUSLY C-250>
C-228	***2020***	***TYPICAL DRIVEWAY ACCESS TO PRIVATE GATED COMMUNITY***
C-229	2002	LEFT TURN BAY ON TWO-LANE ROADWAY (TEMP. WIDENING, CROSS STREET ON ONE SIDE ONLY)
C-230	2014	CONCRETE BUS BAYS
C-231	2015	RIGHT TURN/DECELERATION LANE FOR DRIVEWAYS
C-232	2018	CUL-DE-SAC
C-233	2015	8' MID BLOCK VALLEY GUTTER
C-234	2009	SPEED HUMP
C-236	DEL	INTERLOCKING PAVING BLOCKS AND DECORATIVE CONCRETE TRAVELED SURFACE
C-237	DEL	INTERLOCKING PAVING BLOCKS AND DECORATIVE CONCRETE NON-TRAVELED SURFACE
C-238	DEL	DECORATEIVE CONCRETE AT GRADE TRAVELED SURFACE
C-239	2009	DEPTH OF BASE COURSE - MAJOR & MINOR ARTERIALS
C-240	2010	DEPTH OF BASE COURSE - NON RESIDENTIAL COLLECTOR AND LOCAL STREETS
C-241	2010	DEPTH OF BASE COURSE - COLLECTOR STREETS
C-242	2010	DEPTH OF BASE COURSE - RESIDENTIAL LOCAL STREETS
C-243	2018	CURB RAMP FOR ROLL CURB
C-244	DEL	SIDEWALK RAMP AT INTERSECTIONS FOR ROLL CURB
C-245	2014	COMBINED SIDEWALK RAMP AND RESIDENTIAL DRIVEWAY
C-246	2011	SIGHT DISTANCE FOR ARTERIAL AND COLLECTOR STREETS
C-247	2011	SIGHT DISTANCE FOR LOCAL STREETS
C-248	1999	KEY LOT SIGHT DISTANCE
C-249	2018	ACCESSIBLE CURB RAMP ALIGNMENT
C-250	DEL	LEFT TURN BAY IN 40' MEDIAN DESIGN
C-251	2009	ALLEY PAVEMENT LOT DRAINAGE FROM ALLEY
C-252	2009	ALLEY PAVEMENT LOT DRAINAGE TO ALLEY
C-253	DEL	DECORATIVE CONCRETE
C-254	1999	ARTERIAL/COLLECTOR ROADWAY LANDSCAPE DRAINAGE
C-255	2007	TYPICAL ROUNDABOUT
C-256	2013	TYPICAL RAISED CROSSWALK
C-257	***2020***	***IN-LINE RAMP DETAIL FOR RETURN TYPE DRIVEWAY***
C-258-1	2015	DIRECTIONAL CURB RAMP ARTERIAL STREETS
C-258-2	2015	DIRECTIONAL CURB RAMP COLLECTOR STREETS
C-258-3	2015	DIRECTIONAL CURB RAMP LOCAL STREETS
C-259	2015	MODIFIED ENTRANCE
C-260-1	***2020***	***ON-STREET PARKING USING BULB-OUTS***
C-260-2	***2020***	***ON-STREET PARKING ACCESSIBLE SPACES***
C-261	***2020***	**PASSENGER LOADING ZONES FOR AUTONOMOUS VEHICLES AND RIDE SHARING**

C-300 SERIES: WATER

Detail	Revised	Title
C-300	2009	FLUSHING PIPE ASSEMBLY WITH BALL VALVE
C-301-1	2018	WATER SERVICE INSTALLATION
C-301-2	2013	MULTI-METER WATER SERVICE INSTALLATION
C-302	1999	RESIDENTIAL BACKFLOW PREVENTION ASSEMBLY INSTALLATION - 1" OR UNDER
C-303-1	2018	FIRE HYDRANT INSTALLATION
C-303-2	2018	FIRE HYDRANT COLOR CODE
C-303-3	2018	FIRE HYDRANT INSTALLATION 'OUT OF SERVICE' SIGNS
C-304	DEL	FIRE HYDRANT LOCK
C-305	2018	LOCATIONS FOR NEW FIRE HYDRANT
C-306	DEL	FIRE HYDRANT MARKER > > USE MAG STD DTL 122 INSTEAD
C-307	2015	VALVE BOX INSTALLATION (POTABLE WATER)
C-308	2009	WATER PIPE BEDDING DETAIL
C-309	DEL	PRESSURE VACUUM BREAKER BACKFLOW PREVENTION ASSEMBLY INSTALLATION - 2" & UNDER
C-310	DEL	DOUBLE-CHECK VALVE BACKFLOW PREVENTION INSTALLATION - 3" & UNDER
C-311	2013	REDUCED PRESSURE - PRINCIPLE BACKFLOW PREVENTION ASSEMBLY INSTALLATION - 3" AND UNDER
C-312	DEL	DOUBLE CHECK VALVE BACKFLOW PREVENTION ASSEMBLY 2 1/2", 4", 6", 8", 10" PRIVATE DOMESTIC WATER MAIN
C-314	DEL	DOUBLE CHECK VALVE BACKFLOW PREVENTION ASSEMBLY 3", 4", 6", 8", 10"
C-315	2016	REDUCED PRESSURE PRINCIPLE BACKFLOW PREVENTION ASSEMBLY INSTALLATION - 4" AND LARGE
C-316	***2020***	***3" TO 10" METER VAULT***
C-317	2002	CONCRETE COLLAR DETAIL WATER VALVE BOX PLACEMENT UNPAVED AREAS
C-319	***2020***	***2" COMBINATION AIR/VACUUM VALVE ASSEMBLY***
C-320	2010	VAULT FOR 24" GATE VALVE
C-321	2011	WATER QUALITY MONITORING STATION
C-322	2013	POTABLE WATER METER SAMPLING STATION CONVERSION

C-400 SERIES: WASTEWATER

Detail	Revised	Title
C-400	***2020***	***MANHOLE FRAME AND COVER TYPES***
C-401	***2020***	***MANHOLE CONCRETE COLLAR AND ADJUSTMENT TYPES***
C-402	2009	SEWER PIPE BEDDING DETAIL
C-403	***2020***	***SEWER CONNECTIONS***

C-400 SERIES: WASTEWATER (CONTINUED)

Detail	Revised	Title
C-404-1	2016	RECLAIMED WATER SERVICE CONNECTIONS
C-404-2	2008	RECLAIMED WATER SERVICE CONNECTION DATA FORM
C-404-3	***2020***	***2" RECLAIMED WATER IRR SERVICE LINE INLINE PUMP TYPE***
C-404-4	2014	3" RECLAIMED WATER IRR SERVICE LINE INLINE PUMP TYPE
C-404-5	2014	4" RECLAIMED WATER IRR SERVICE LINE INLINE PUMP TYPE
C-404-6	2014	4" RECLAIMED WATER IRR SERVICE LINE INLINE PUMP TYPE
C-404-7	2014	6" RECLAIMED WATER IRR SERVICE LINE INLINE PUMP TYPE
C-404-8	2014	6" RECLAIMED WATER IRR SERVICE LINE INLINE PUMP TYPE
C-404-9	2014	4" RECLAIMED WATER IRR SERVICE LINE CAN PUMP TYPE
C-404-10	2008	4" RECLAIMED WATER IRR SERVICE LINE CAN PUMP TYPE
C-404-11	2014	6" RECLAIMED WATER IRR SERVICE LINE CAN PUMP TYPE
C-404-12	2008	6" RECLAIMED WATER IRR SERVICE LINE CAN PUMP TYPE
C-405-1	2009	LARGE WATER USER (WITH LAKE) RECLAIMED WATER TURNOUT
C-405-2	2009	ANTENNA
C-405-3	2009	ROLLING GATE
C-405-4	2009	LEVEL SENSORS
C-405-5	2009	METERPED
C-405-6	2009	TURNOUT COMPOUND
C-405-7	2009	COMPOUND WALL
C-405-8	2009	SCADA CABINET
C-405-9	2009	MATERIALS LIST 1 OF 2
C-405-10	2009	MATERIALS LIST 2 OF 2
C-405-11	2009	SIGNAGE
C-405-12	2009	GENERAL NOTES
C-406-1	2015	VALVE BOX INSTALLATION (RECLAIMED WATER)
C-406-2	1999	VALVE BOX INSTALLATION (RECLAIMED WATER)
C-408	***2020***	***PIPE LOCATOR WIRE & I.D. TAPE***
C-409	2009	PIPE PENETRATION AND MANHOLE FRAME TERMINATION DETAIL
C-410	2010	DEEP CUT SEWER CONNECTION (SEWER LATERAL)
C-411	2010	BUILDING SEWER CONNECTION
C-412	2018	6" SEWER SAMPLING PORT
C-416	2011	3" THROUGH 6" RECLAIMED WATER METER VAULT
C-417-1	2015	INDUSTRIAL MONITORING VAULT DETAILS
C-417-2	2014	INDUSTRIAL MONITORING VAULT SITE PLAN

C-500 SERIES: STORM SEWER & DRAINAGE

Detail	Revised	Title
C-500	***2020***	***SCUPPER***
C-501	2018	DRYWELL SYSTEM DETAIL AND SPECIFICATIONS
C-502	2018	PRETREATMENT DRYWELL SYSTEM
C-503	***2020***	***TRASH RACK/ACCESS BARRIER***
C-504	2002	RETENTION BASIN INLET
C-506	1999	CATCH BASIN GRATES
C-507-1	2009	BELOW GRADE RETENTION BASIN INLET (BUBBLER BOX)
C-507-2	2009	BELOW GRADE RETENTION BASIN INLET (BUBBLER BOX)
C-507-3	2018	BELOW GRADE RETENTION BASIN INLET (BUBBLER BOX)
C-508	2009	STORM DRAIN INLET MARKER
C-509	2018	BACKFILL DETAIL CMP UNDERGROUND RETENTION STORAGE TANK

C-600 SERIES: SIGNAGE

Detail	Revised	Title
C-600	2018	MEDIAN SIGNAGE
C-601-1	2018	STREET NAME SIGNS (FOR PUBLIC STREETS)
C-601-2	2018	STREET NAME SIGNS (FOR PRIVATE STREETS)
C-602	2002	COLLECTOR ROAD PAVEMENT MARKINGS
C-603	2018	ADVANCED STREET NAME SIGNS
C-604	1999	ADDRESS IDENTIFICATION FOR CLUSTER DEVELOPMENTS
C-605-1	2018	NEARSIDE STREET NAME SIGNS (FOR PUBLIC STREETS)
C-605-2	2018	NEARSIDE STREET NAME SIGNS (FOR PRIVATE STREETS)
C-606	***2020***	***INTERNALLY ILLUMINATED STREET NAME SIGN***
C-607	***2020***	***INTERNALLY ILLUMINATED STREET NAME SIGN - BRACKET ASSEMBLY***
C-608	***2020***	***INTERNALLY ILLUMINATED STREET NAME SIGN - J/R POLE MOUNTING***
C-609	1999	INTERNALLY ILLUMINATED STREET NAME SIGN - F POLE MOUNTING
C-610	1999	INTERNALLY ILLUMINATED STREET NAME SIGN - F POLE MOUNTING
C-611	2018	ACCESSIBLE PARKING SPACE SIGN
C-612	2018	ACCESSIBLE PAVEMENT MARKING SYMBOL
C-613	2017	SIGN POST AND BASE

C-600 SERIES: SIGNAGE (CONTINUED)

Detail	Revised	Title
C-614	***2020***	***PAVEMENT MARKING DETAILS***
C-615	2002	SIGN POST AND BASE LOCATIONS FOR RESIDENTIAL STREETS
C-616	2013	RIGHT TURN LANE DROP
C-617	2018	MEDIAN NOSE PAINTING
C-618	2013	TYPICAL SIGNS AND MARKINGS ARTERIAL ROAD
C-619	2013	TYPICAL LANE WIDTHS - ARTERIAL ROAD WITH DOUBLE LEFT TURNS
C-620	2009	MAJOR ARTERIAL DECELERATION LANE SIGNING & STRIPING
C-621	2002	ARTERIAL SIGNAGE
C-622	2018	ARTERIAL ROADWAY MARKINGS (W/O MEDIANS)
C-623	2018	INTERSECTION MARKINGS (WITH MEDIANS)

C-800 SERIES: LANDSCAPE

Detail	Revised	Title
C-801	2012	TREE PLANTING AND STAKING
C-802	2012	TREE PLANTING SLOPE
C-803	2012	PALM PLANTING AND BRACING
C-804	2012	CACTUS AND ACCENT PLANTING
C-805	2012	SHRUB AND GROUND COVER PLANTING
C-806	2012	PLANT PIT SCHEDULE
C-807	***2020***	***MEDIAN***
C-808	2012	EMITTER ACCESS BOX AND EMITTER LAYOUT
C-809	2012	REMOTE CONTROL ELECTRIC VALVE TURF
C-810	2012	REMOTE CONTROL ELECTRIC VALVE DRIP
C-811	2012	IRRIGATION TRENCH
C-812	2012	BUBBLER
C-813	2012	GEAR-DRIVEN POP-UP ROTER
C-814	2012	POP-UP SPRAY HEAD
C-815	2012	QUICK COUPLER
C-816	2012	TYPICAL IRRIGATION LEGEND AND INFORMATION
C-817	2011	EMITTER-BUBBLER SCHEDULE

GENERAL INFORMATION

C-100 TO C-113

DRAWING COURTESTY OF UTILITY VAULT CO.

NOTES:

1. VAULT SHALL BE UTILITY VAULT CO. #444-TA OR APPROVED EQUAL.
2. FRAME AND COVER SHALL BE MAG STD DTL 536 - ALTERNATE COVER FOR CURB OPENING CATCH BASINS.
3. COVER SHALL BE FILLED WITH CONCRETE, BROOM FINISHED, AND STAMPED WITH CITY OF CHANDLER LOGO.

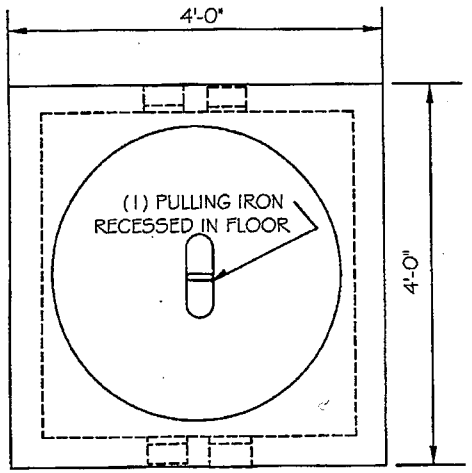

PLAN VIEW

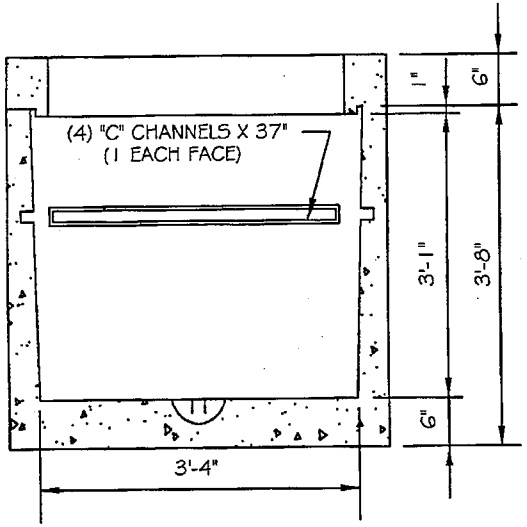

SECTION VIEW A-A

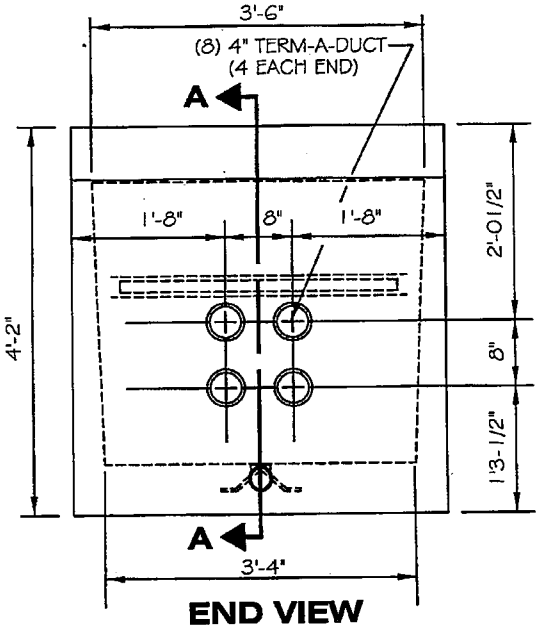

END VIEW

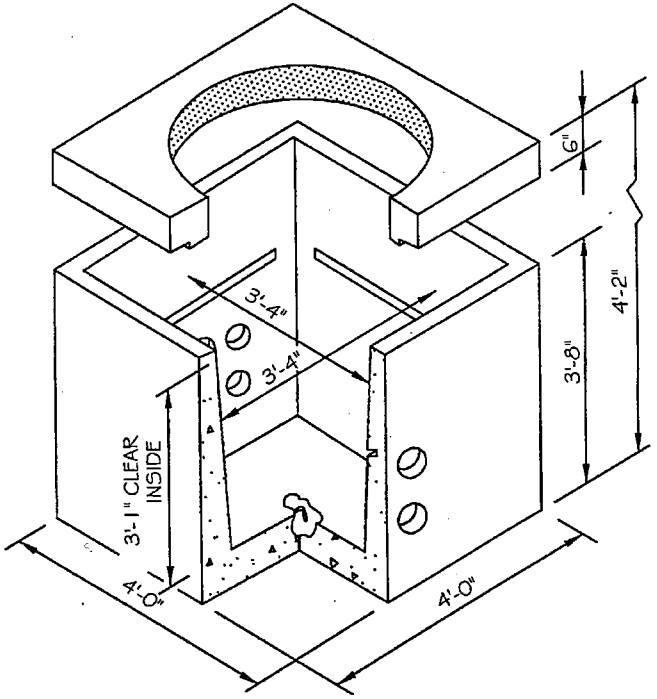

ISOMETRIC VIEW

DETAIL NO.					DETAIL NO.
C-103 NTS	CITY OF CHANDLER STANDARD DETAIL	**FIBER OPTIC CABLE SPLICING VAULT**	APPROVED: CITY ENGINEER DATE: 01/08/09		**C-103** NTS

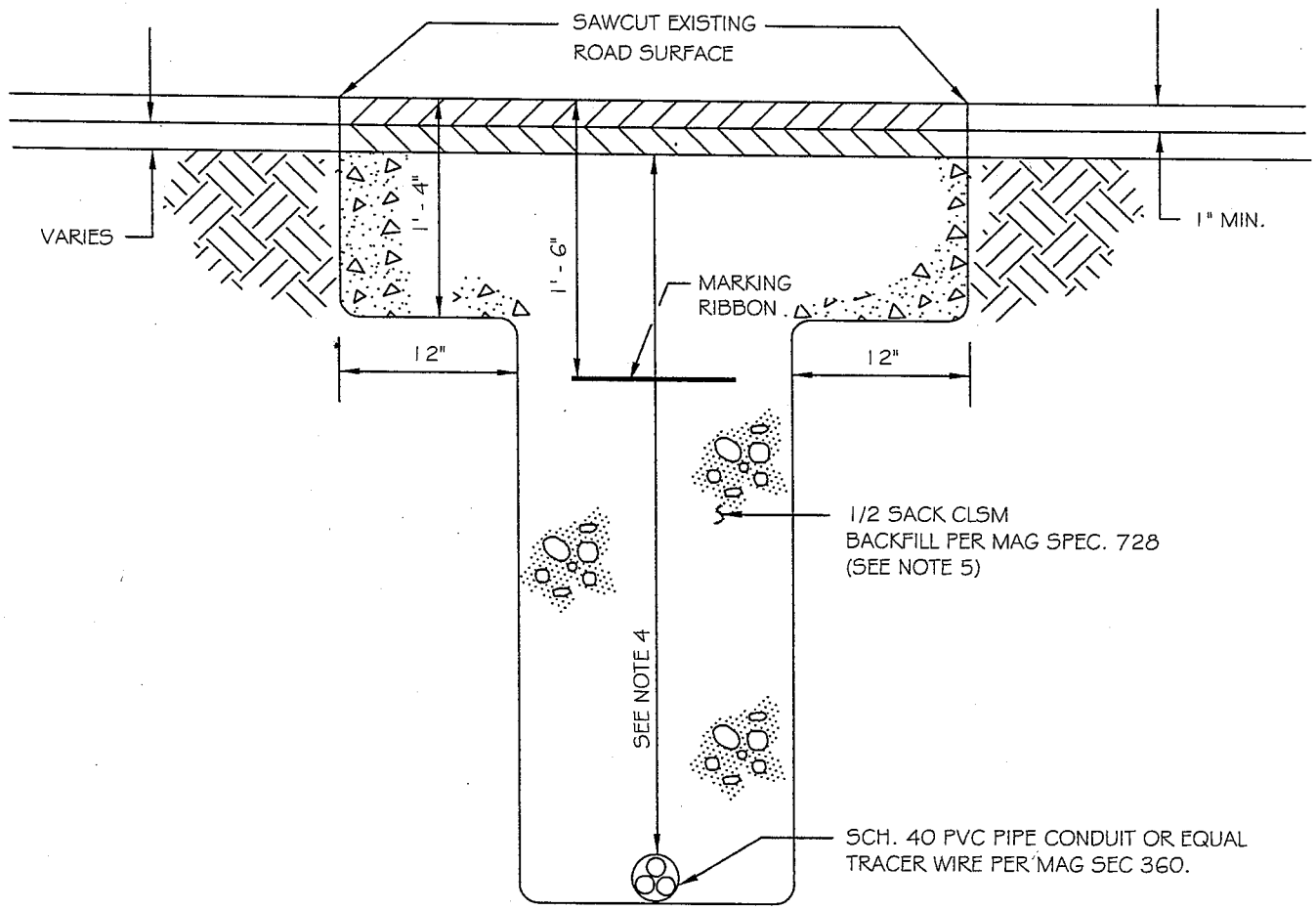

NOTES:

1. MARKING RIBBON TO BE 3" MINIMUM WIDTH, 5 MIL THICK METALLIC DETECTABLE TAPE WITH THE MESSAGE "CAUTION - FIBER OPTIC CABLE BURIED BELOW".
2. FOR BORES OR PUSHES, STEEL SLEEVES MUST BE USED.
3. REPLACE ROAD SURFACE PER MAG STANDARD DETAIL 200 'T' TOP.
4. INSTALLATION SHALL BE PER MAG SECT 360.
5. NATIVE MATERIAL CAN BE UTILIZED FOR BACKFILL IN P.U.E. OR MIN. 2 FEET FROM SURFACE IMPROVEMENTS.

DETAIL NO.					DETAIL NO.
C-104	CITY OF CHANDLER STANDARD DETAIL	**FIBER OPTIC CABLE DUCTS**	APPROVED: CITY ENGINEER		**C-104**
NTS			DATE: 01-27-11		NTS

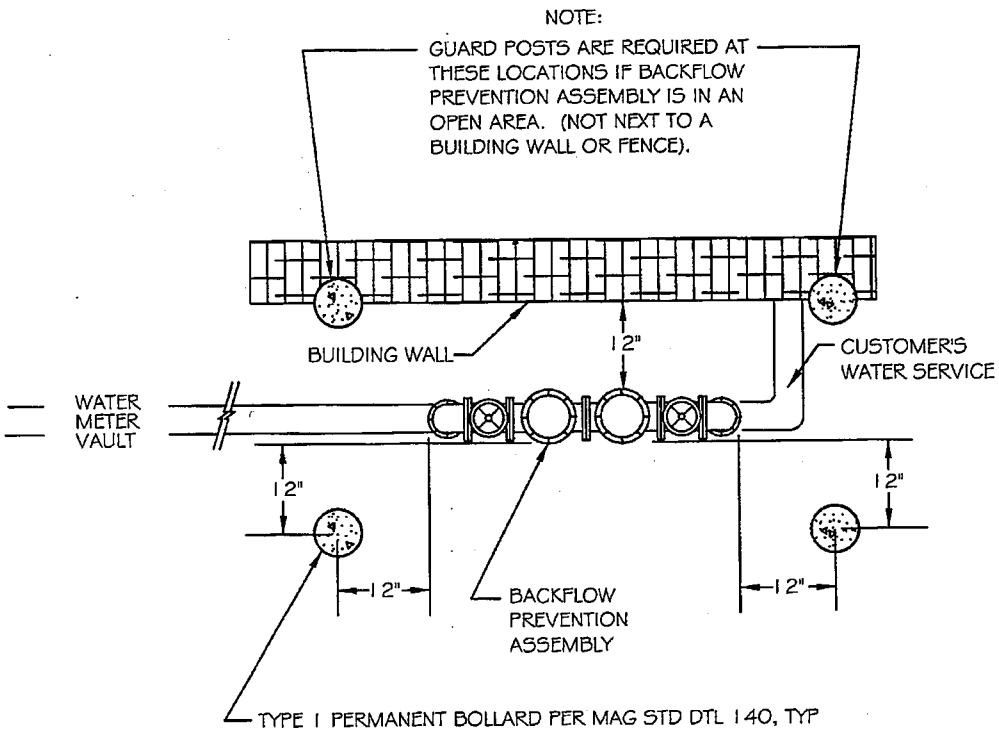

GUARD POST FOR BACKFLOW PREVENTION ASSEMBLY

DETAIL NO. **C-105** NTS	CITY OF CHANDLER STANDARD DETAIL	**GUARD POST FOR BACKFLOW PREVENTION ASSEMBLIES**	APPROVED: CITY ENGINEER DATE: 01/08/09	DETAIL NO. **C-105** NTS

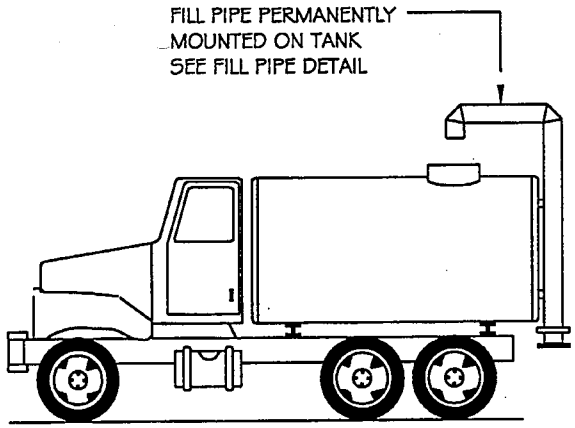

WATER TRUCK

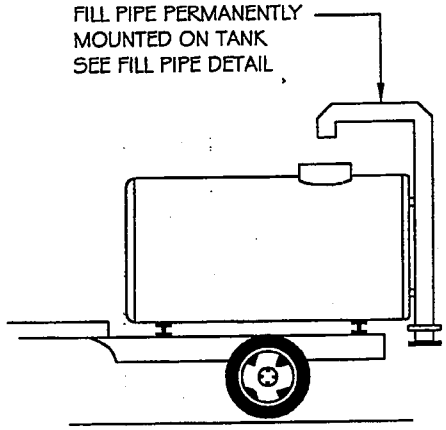

WATER WAGON

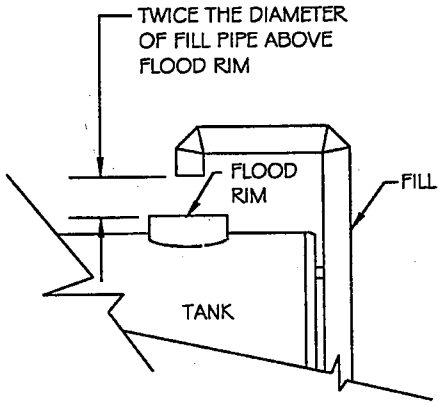

FILL PIPE DETAIL

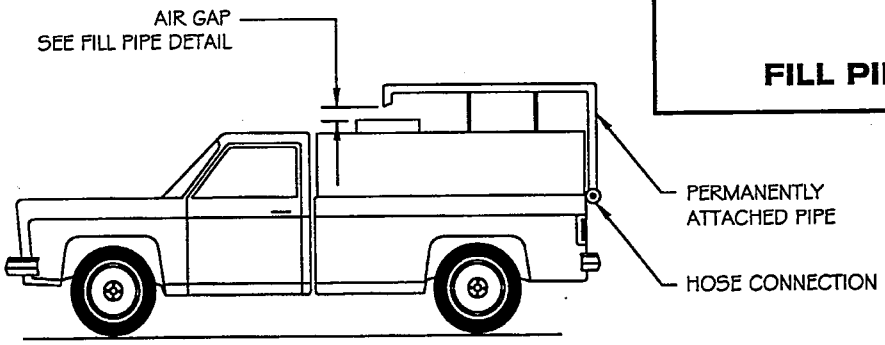

WATER TRUCK

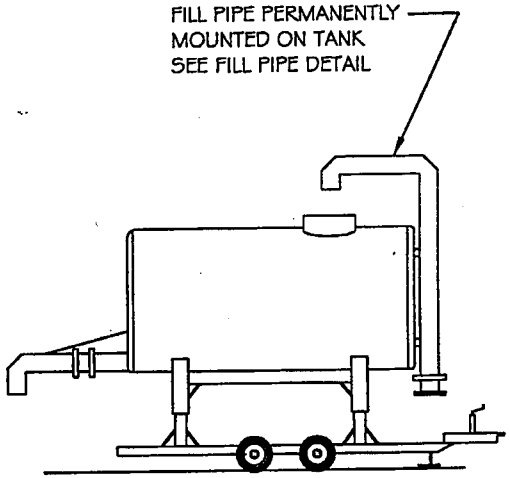

ELEVATED TANK

C-108 **REPLACES** **95**	CITY OF CHANDLER STANDARD DETAIL	**AIR GAP BACKFLOW PROTECTION FOR WATER TANKS**	APPROVED: CITY ENGINEER DATE: 11-19-99	DETAIL NO. **C-108** NTS

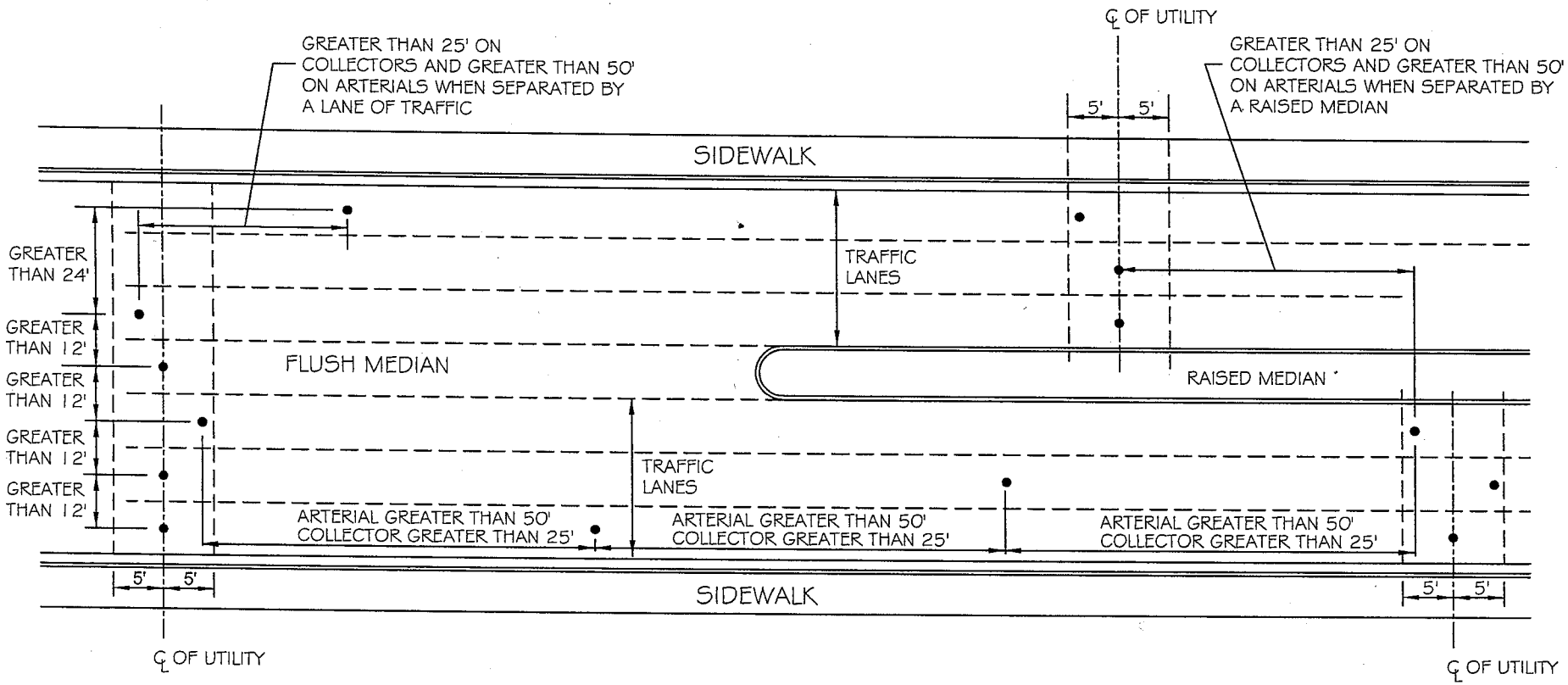

NOTES:

1. REFER TO THE REQUIREMENTS OF ENCROACHMENT PERMITS, STREET CUT PERMITS, AND THE FEE EXEMPTION POLICY.
2. DIMENSIONS FOR POTHOLE SPACING ARE MEASURED TO THE EDGES OF THE POTHOLES.

DETAIL NO. **C-111** NTS	CITY OF CHANDLER STANDARD DETAIL	**MINIMUM POTHOLE SPACING FOR PAVEMENT RESTORATION FEE EXEMPTION**	APPROVED: CITY ENGINEER DATE: 01-27-11	DETAIL NO. **C-111** NTS

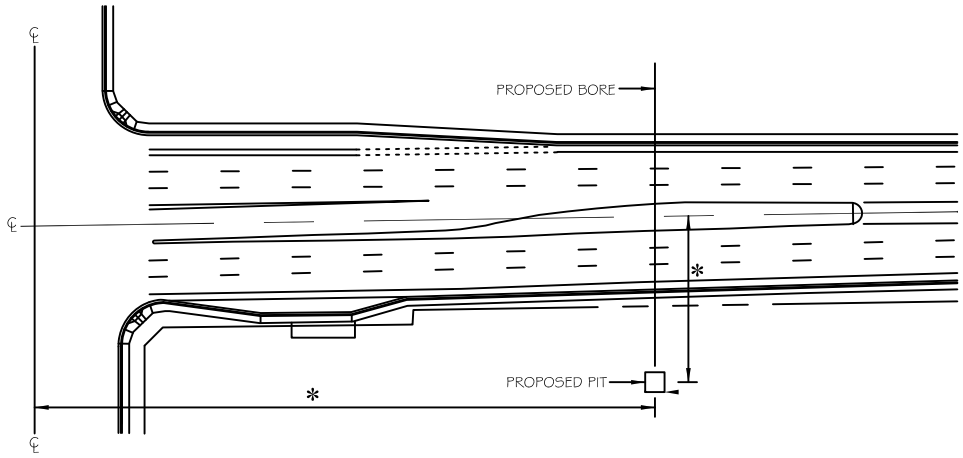

PLAN VIEW

NOT TO SCALE

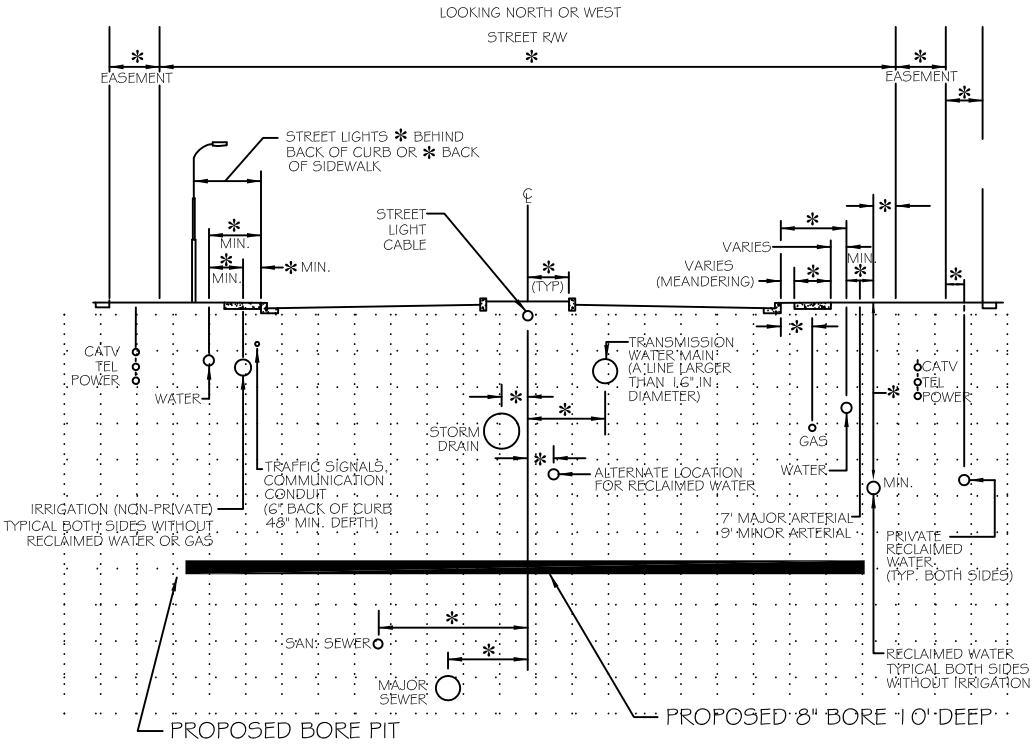

BORE PROFILE TYPICAL SECTION

NOTES:

1. * PROVIDE PROPOSED LOCATION OF BORE AND ALL UTILITIES WITH VERTICAL & HORIZONTAL DIMENSIONS, AS WELL AS DIMENSIONS OF FACILITIES TO BE CROSSED.
2. 12" BY 12" MAX. SIZE POTHOLES ALLOWED TO VERIFY UNKNOWN UTILITY LOCATION AND TO MONITOR BORES PASSING WITHIN 2' OF EXISTING UTILITIES. CORE DRILLING IS PREFERED.
3. 1' X 1' AND 2' X 2' POTHOLE PLATES ARE NOT PERMITTED. RESTORE POTHOLES PER MAG STD DTL 212.
4. ALL BORES TO BE SLEEVED IN SCHEDULE 40 PVC OR BETTER.
5. BACKFILL REQUIREMENTS OF PIT SHALL BE PER MAG SECTION 601
6. JURISDICTION SHALL BE NOTIFIED IF OBSTRUCTIONS ARE ENCOUNTERED.
7. GUIDED BORE REQUIRED PER MAG SECTION 608 & CITY SUPPLEMENTAL SPEC.
8. THE CONTRACTOR SHALL MAKE ARRANGEMENTS WITH THE OWNER OF ANY DAMAGED FACILITY FOR ITS REPAIR OR REPLACEMENT. COST OF SUCH REPAIRS SHALL BE IN COMPLIANCE WITH M.A.G. OR SPECIAL AGREEMENTS.
9. REPLACE OR REPAIR ANY LANDSCAPING/SPRINKLER DAMAGED DURING THE COURSE OF THE WORK. PER MAG 107.9.
10. PERMISSION REQUIRED FROM THE CITY PRIOR TO REMOVING OR TRIMMING ANY LANDSCAPING.
11. 24" MIN. CLEARANCE SHALL BE PROVIDED BETWEEN BORE AND ALL EXISTING UTILITIES.

DETAIL NO.					DETAIL NO.
C-112	CITY OF CHANDLER STANDARD DETAIL	**ENGINEERED UTILITY BORE**	APPROVED: CITY ENGINEER		**C-112**
NTS			DATE: 05-10-2018		NTS

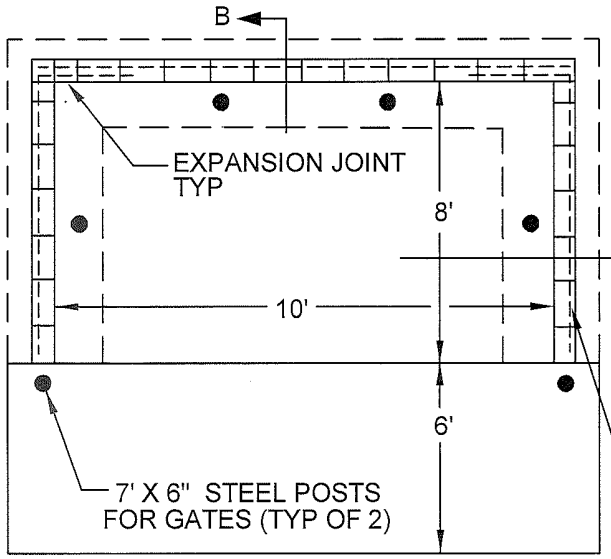

PLAN

NOTES:

1. INSIDE DIMENSIONS:10' WIDE, 8' DEEP, AND 6'* HIGH. A MIN 5' HIGH WALL / GATE MUST BE PROVIDED FOR RECESSED ENCLOSERS.
2. CONCRETE BASE 4" THICK AT ENCLOSURE AND 6" THICK EXTENDED 6' BEYOND FRONT OF ENCLOSURE, BOTH WITH SUB-BASE OF 4". BASE MUST BE LEVEL WITH GRADE.
3. FOUR 4" X 4' STEEL PIPES SET 1' IN GROUND FILLED WITH CONCRETE, MOUNTED INSIDE ENCLOSURE. SIDE POLES PLACED 1/2 THE DISTANCE FROM FRONT TO BACK. BACK POLES PLACED 1/3 THE DISTANCE OF 6" FROM THE WALL.
4. 9' WIDTH FOR EACH ADDITIONAL CONTAINER. ADD 2 ADDITIONAL PIPES AT REAR OF ENCLOSURE FOR EACH ADDITIONAL CONTAINER.
5. GATES TO BE MOUNTED ON SEPARATE POST NOT CONNECTED TO WALL.
6. GATES TO BE SOLID AND PAINTED TO MATCH ENCLOSURE, CUSTOM DESIGNS WILL BE APPROVED ON A CASE-BY-CASE BASIS.
7. CMU BLOCK MAY BE ANY STD SIZE, 8" MIN WIDTH W/ SMOOTH, SPLIT, SCORED OR FLUTED EXTERIOR FACE OR SPECIALTY BLOCK. TOP TO BE SOLID BLOCK, CAPPED OR ALL CORES FILLED. WALL TO BE FINISHED AND PAINTED TO MATCH BUILDING.

PROVIDE BOND BEAM IN SECOND COURSE W/ #4 CONTINUOUS RE-BAR, FULLY GROUTED

#4 RE-BAR AT FOUR CORNERS AND AT 48" MAX SPACING ALONG WALL WITH FULLY GROUTED CELLS

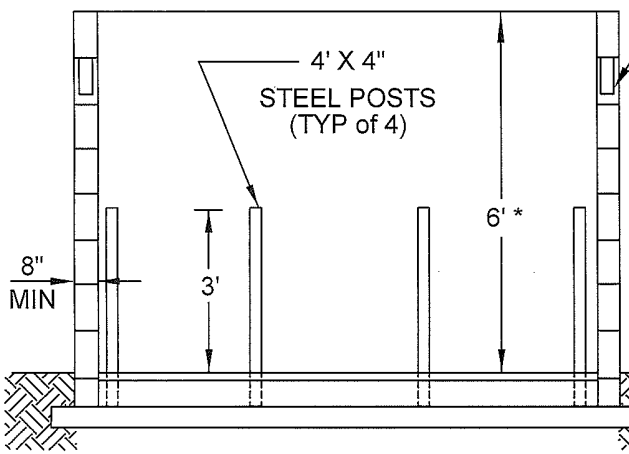

FRONT SECTION A

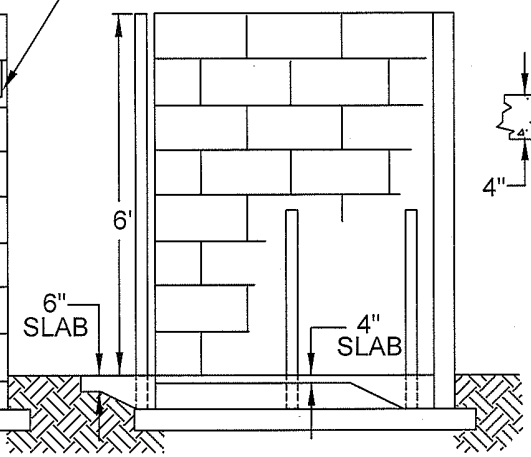

SIDE SECTION B

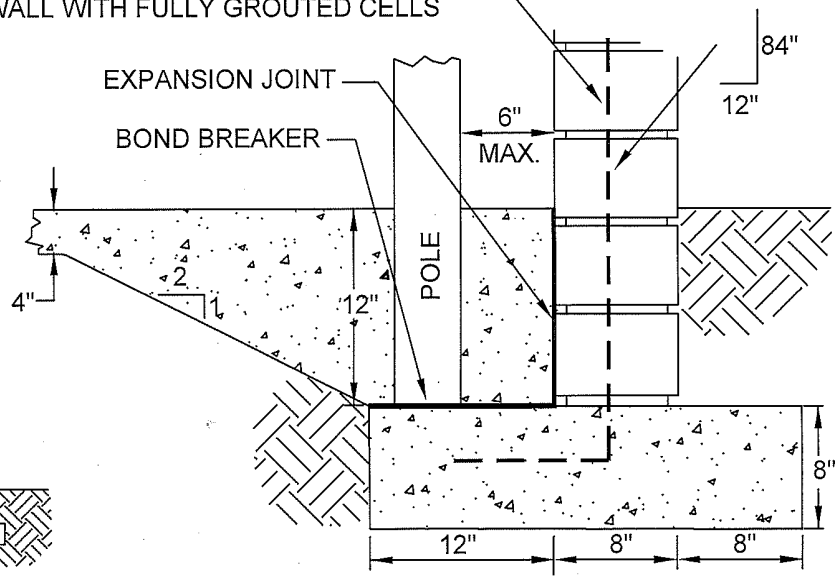

FOOTING DETAIL

DETAIL NO.				
C-113 NTS	CITY OF CHANDLER STANDARD DETAIL	**TRASH RECEPTACLE ENCLOSURE**	APPROVED: CITY ENGINEER DATE: 07-09-2015	DETAIL NO. **C-113** NTS

STREETS
C-200 TO C-261

LOOKING NORTH OR WEST

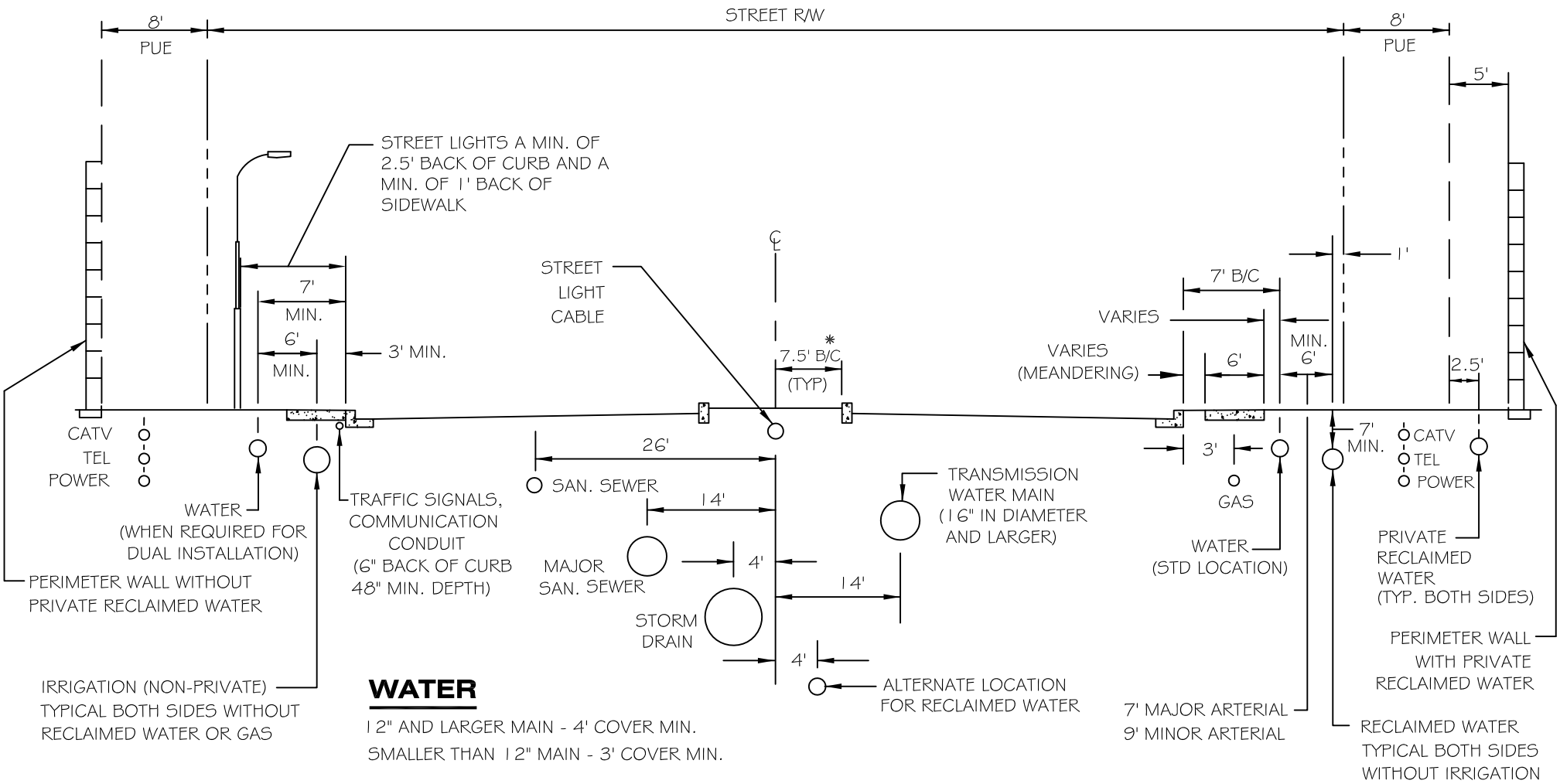

WATER

12" AND LARGER MAIN - 4' COVER MIN.

SMALLER THAN 12" MAIN - 3' COVER MIN.

NOTES:

1. STREET LIGHTS SHALL BE LOCATED A MINIMUM OF 1' BACK OF SIDEWALK UNLESS OTHERWISE APPROVED.
2. PRIVATE RECLAIMED WATER LINES SHALL BE OUTSIDE OF PUBLIC RIGHT OF WAY.
3. * 20 FOOT HALF MEDIAN FOR PHASED ARTERIALS. SEE C.O.C. STANDARD DETAIL NO. C-204.
4. PROVIDE IRRIGATION SLEEVE, MEDIAN TO MEDIAN, 2 NOMINAL SIZES LARGER THAN MAIN, CENTERED.

DETAIL NO.					DETAIL NO.
C-200	CITY OF CHANDLER STANDARD DETAIL	**STANDARD UTILITY LOCATIONS ARTERIAL STREETS**	APPROVED: CITY ENGINEER		**C-200**
NTS			DATE: 05-10-2018		NTS

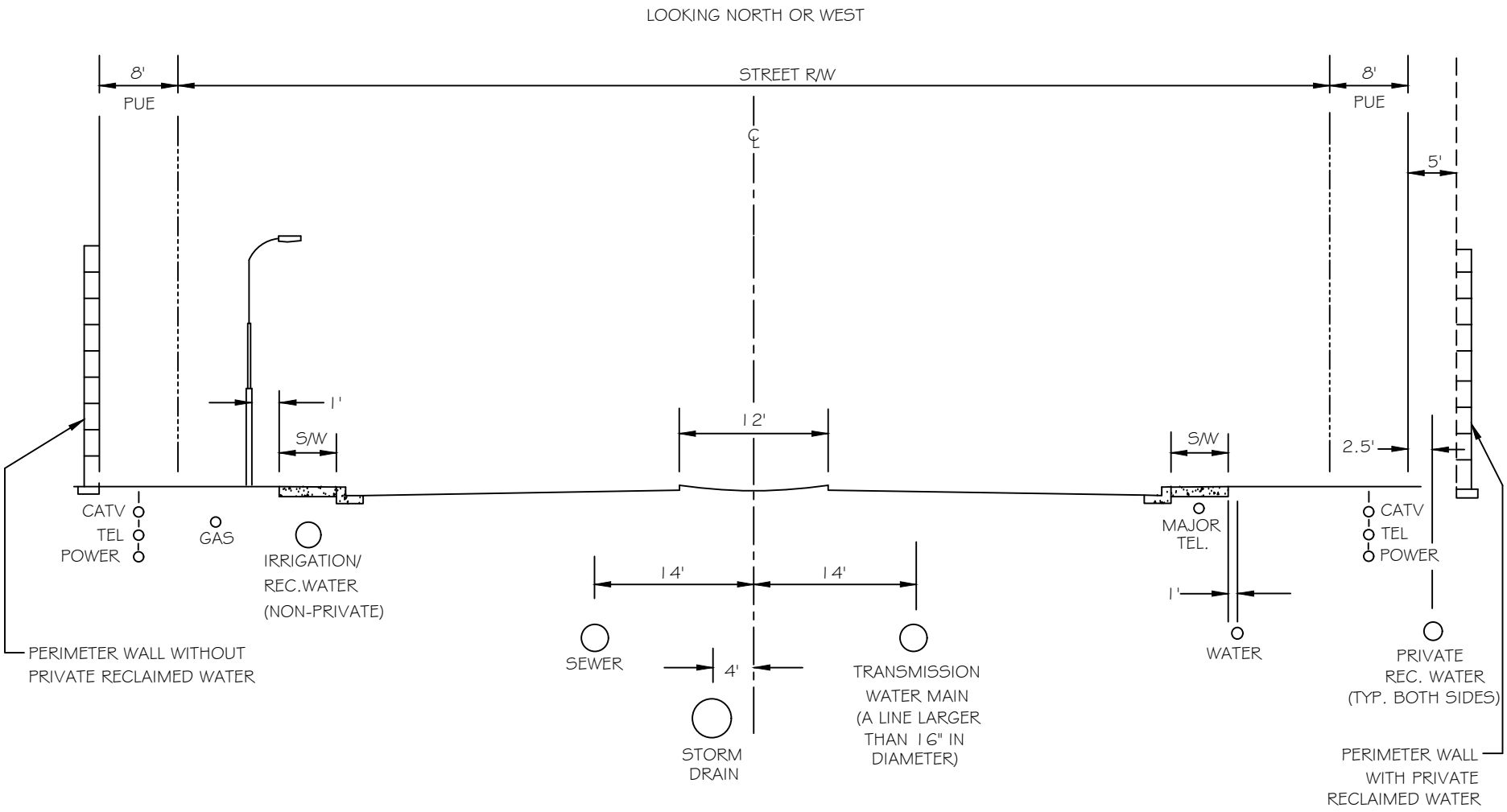

NOTE:

WHEN IN THE BEST INTEREST OF THE CITY, THE PUBLIC WORKS DIRECTOR, OR DESIGNEE, MAY WAIVE SIDEWALK ON ONE SIDE OF ROADWAY IN INDUSTRIAL AREAS.

DETAIL NO.					DETAIL NO.
C-201	CITY OF CHANDLER STANDARD DETAIL	**STANDARD UTILITY LOCATIONS COLLECTOR STREETS**	APPROVED: CITY ENGINEER		**C-201**
NTS			DATE: 05-10-2018		NTS

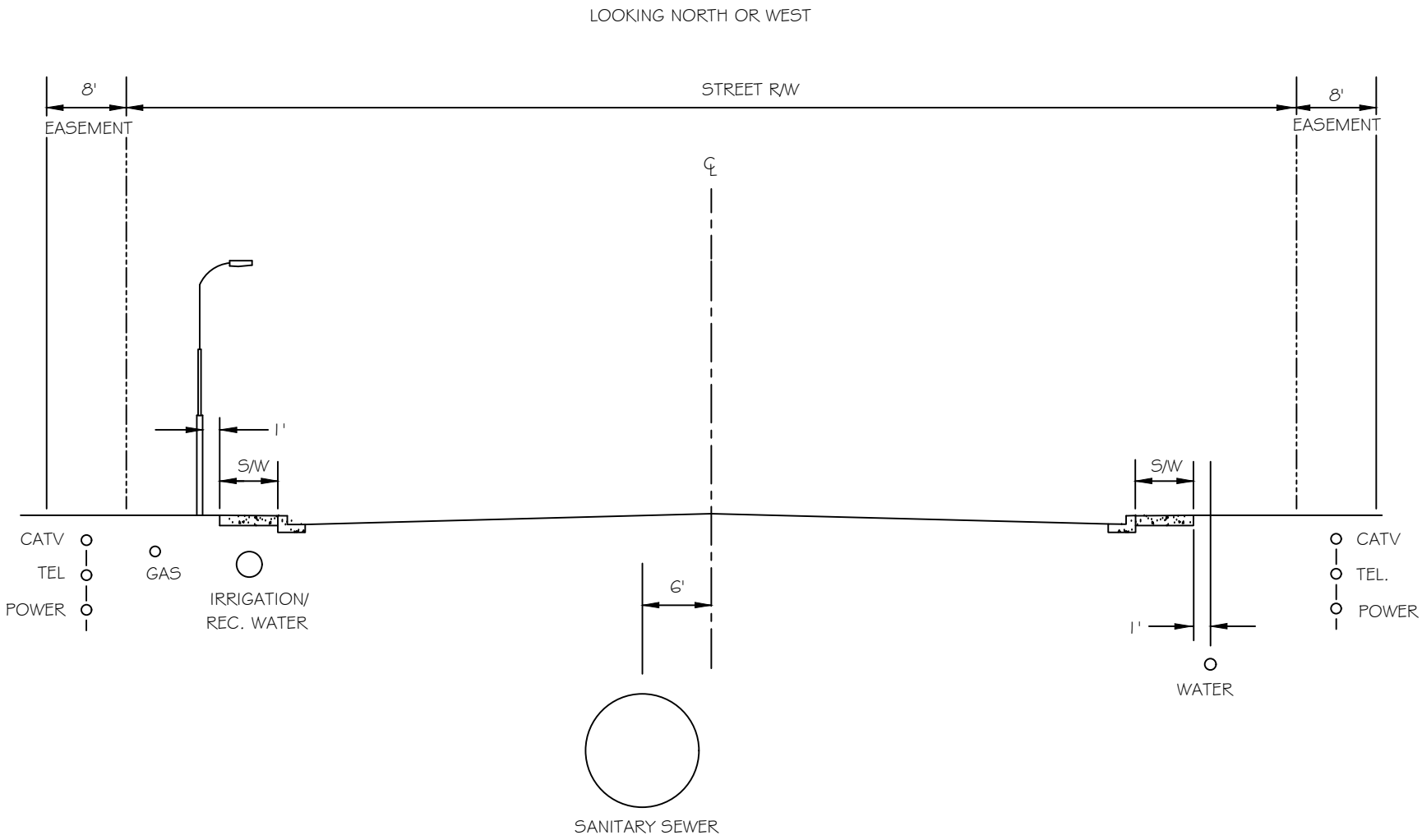

DETAIL NO.					DETAIL NO.
C-202	CITY OF CHANDLER STANDARD DETAIL	**STANDARD UTILITY LOCATIONS LOCAL STREETS**	APPROVED: CITY ENGINEER		**C-202**
NTS			DATE: 05-10-2018		NTS

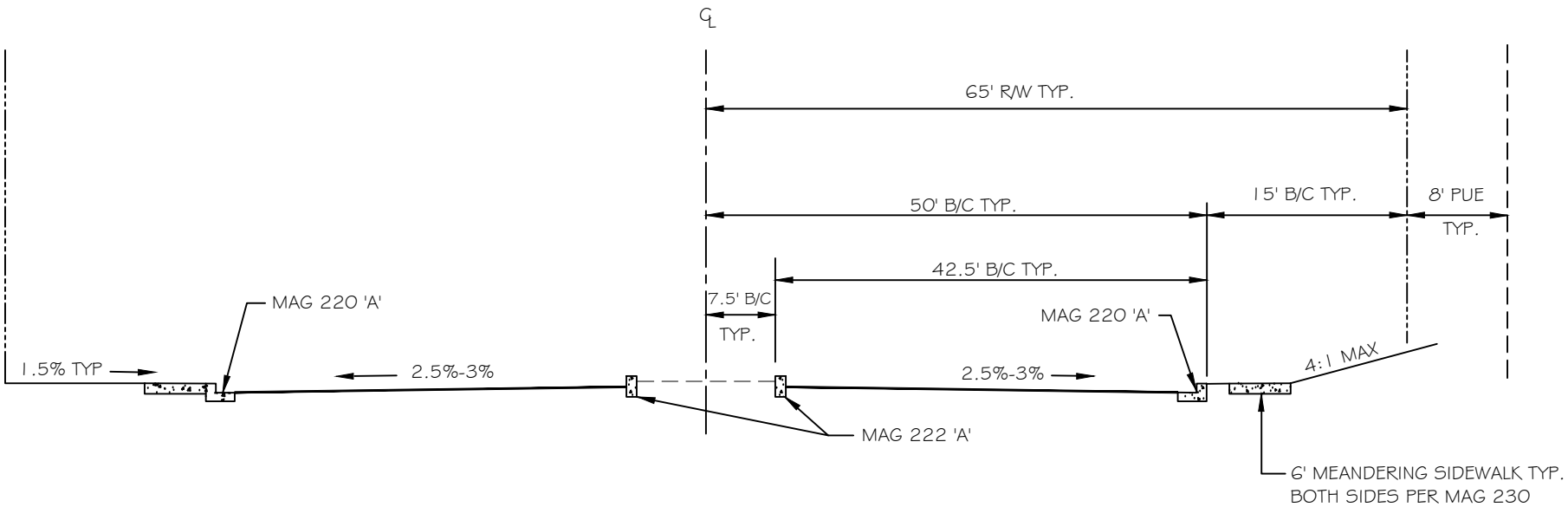

NOTES:

1. THE SUBGRADE SHALL BE PREPARED IN ACCORDANCE WITH MAG STANDARD SPECIFICATIONS, SEC. 301.
2. BASE COURSE:
   A. THE THICKNESS SHALL CONFORM TO COC STANDARD DETAIL C-239.
   B. ALL CONSTRUCTION AND MATERIALS SHALL CONFORM TO MAG STANDARD SPECIFICATIONS, SECS. 310 AND 702.
3. ASPHALTIC CONCRETE PAVEMENT:
   A. 3" THICK A19 OR A25 EVAC BASE COURSE WITH 2" OF A12.5 EVAC SURFACE COURSE.
   B. ALL CONSTRUCTION AND MATERIALS SHALL CONFORM TO EVAC AND MAG STANDARD SPECIFICATIONS, SECS. 321 AND 710.
4. ADDITIONAL RIGHT-OF-WAY SHALL BE PROVIDED WHERE NECESSARY TO ACCOMMODATE DOUBLE LEFT TURN LANES OR RIGHT TURN LANES WARRANTED BY TRAFFIC DEMANDS.
5. MEDIAN END SHALL BE RAMP PER COC STANDARD DETAIL C-225.
6. MEDIAN LANDSCAPE AREA SHALL BE PER COC STANDARD DETAIL C-807.

DETAIL NO.					DETAIL NO.
C-203	CITY OF CHANDLER STANDARD DETAIL	**MAJOR ARTERIAL STREET TYPICAL CROSS SECTION**	APPROVED: CITY ENGINEER		**C-203**
NTS			DATE: 05-10-2018		NTS

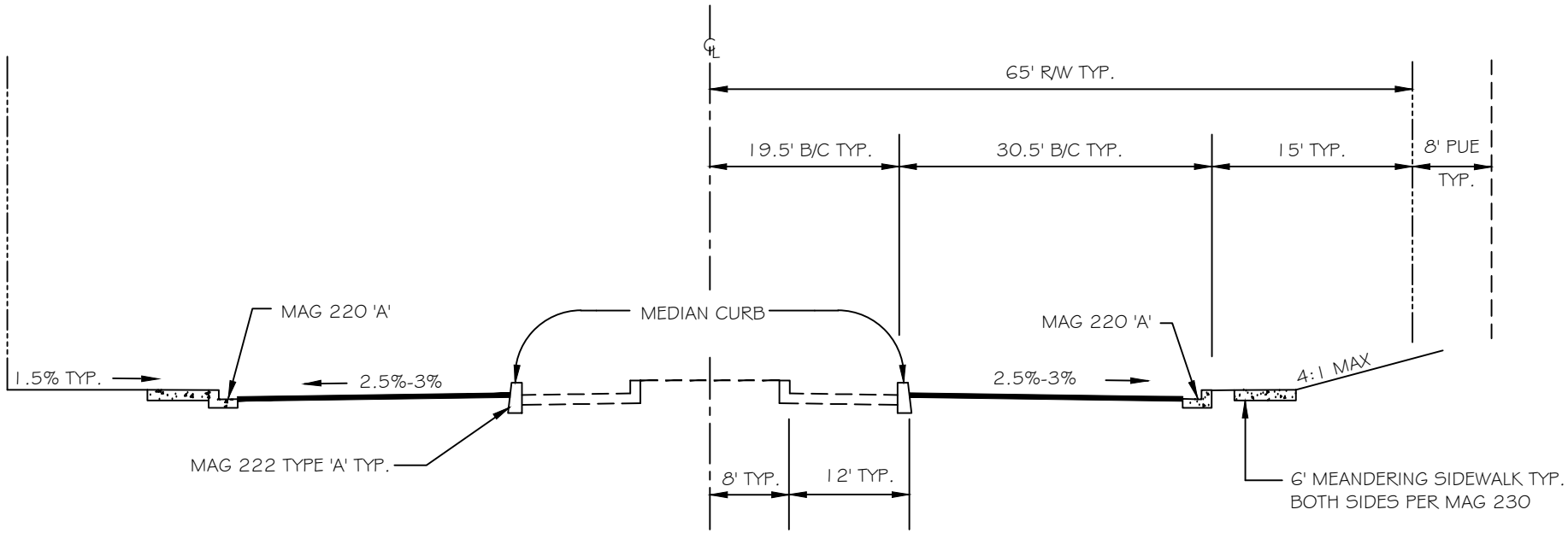

NOTES:

1. THE SUBGRADE SHALL BE PREPARED IN ACCORDANCE WITH MAG STANDARD SPECIFICATIONS, SEC. 301.
2. BASE COURSE:
   A. THE THICKNESS SHALL CONFORM TO COC STANDARD DETAIL C-239.
   B. ALL CONSTRUCTION AND MATERIALS SHALL CONFORM TO MAG STANDARD SPECIFICATIONS, SECS. 310 AND 702.
3. ASPHALTIC CONCRETE PAVEMENT:
   A. 3" THICK A19 OR A25 EVAC BASE COURSE WITH 2" OF A12.5 EVAC SURFACE COURSE.
   B. ALL CONSTRUCTION AND MATERIALS SHALL CONFORM TO EVAC AND MAG STANDARD SPECIFICATIONS, SECS. 321 AND 710.
4. ADDITIONAL RIGHT-OF-WAY SHALL BE PROVIDED WHERE NECESSARY TO ACCOMMODATE DOUBLE LEFT TURN LANES OR RIGHT TURN LANES WARRANTED BY TRAFFIC DEMANDS.
5. MEDIAN LANDSCAPE AREA SHALL BE PER COC STANDARD DETAIL C-807.
6. 0.2% MINIMUM LONGITUDINAL GRADE ALLOWED.

DETAIL NO.					DETAIL NO.
C-204	CITY OF CHANDLER STANDARD DETAIL	**PHASED MAJOR ARTERIAL STREET TYPICAL CROSS SECTION**	APPROVED: CITY ENGINEER		**C-204**
NTS			DATE: 05-10-2018		NTS

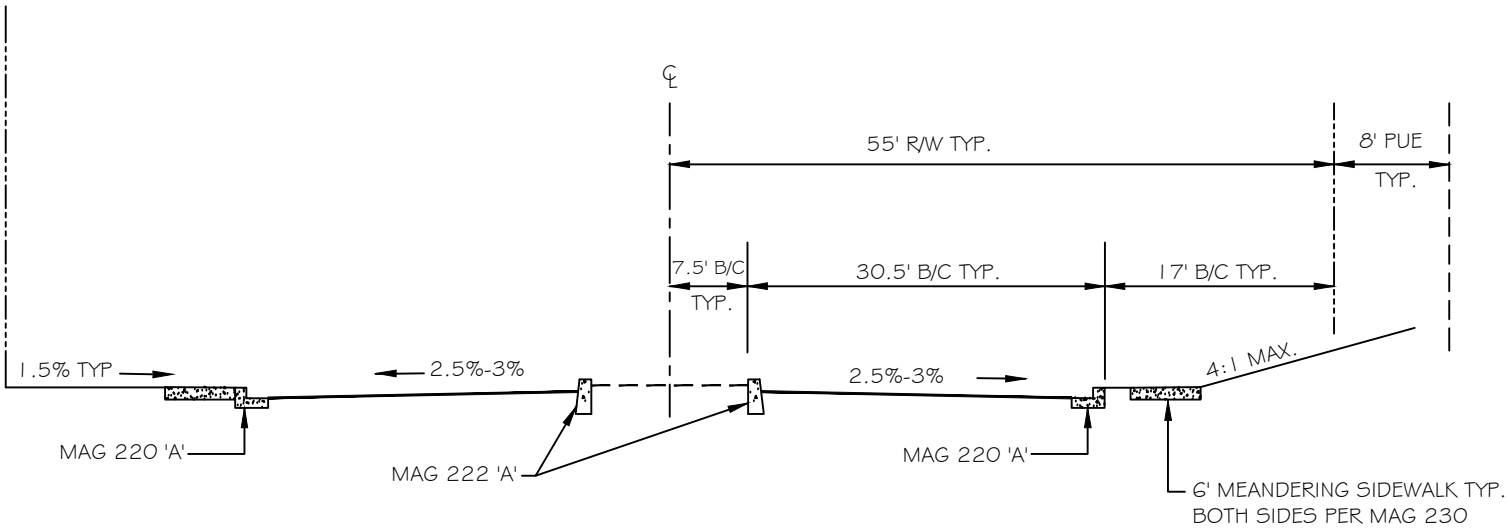

NOTES:

1. THE SUBGRADE SHALL BE PREPARED IN ACCORDANCE WITH MAG STANDARD SPECIFICATIONS, SEC. 301.
2. BASE COURSE:
   A. THE THICKNESS SHALL CONFORM TO COC STANDARD DETAIL C-239.
   B. ALL CONSTRUCTION AND MATERIALS SHALL CONFORM TO MAG STANDARD SPECIFICATIONS, SECS. 310 AND 702.
3. ASPHALTIC CONCRETE PAVEMENT:
   A. 3" THICK A19 OR A25 EVAC BASE COURSE WITH 2" OF A12.5 EVAC SURFACE COURSE.
   B. ALL CONSTRUCTION AND MATERIALS SHALL CONFORM TO EVAC AND MAG STANDARD SPECIFICATIONS, SECS. 321 AND 710.
4. ADDITIONAL RIGHT-OF-WAY SHALL BE PROVIDED WHERE NECESSARY TO ACCOMMODATE DOUBLE LEFT TURN LANES OR RIGHT TURN LANES WARRANTED BY TRAFFIC DEMANDS.
5. RAMP END OF MEDIAN PER COC STANDARD DETAIL C-225.
6. MEDIAN LANDSCAPE AREA SHALL BE PER COC STANDARD DETAIL C-807.
7. 0.2% MINIMUM LONGITUDINAL GRADE ALLOWED.

DETAIL NO.					DETAIL NO.
C-205	CITY OF CHANDLER STANDARD DETAIL	**MINOR ARTERIAL STREET TYPICAL CROSS SECTION**	APPROVED: CITY ENGINEER		**C-205**
NTS			DATE: 05-10-2018		NTS

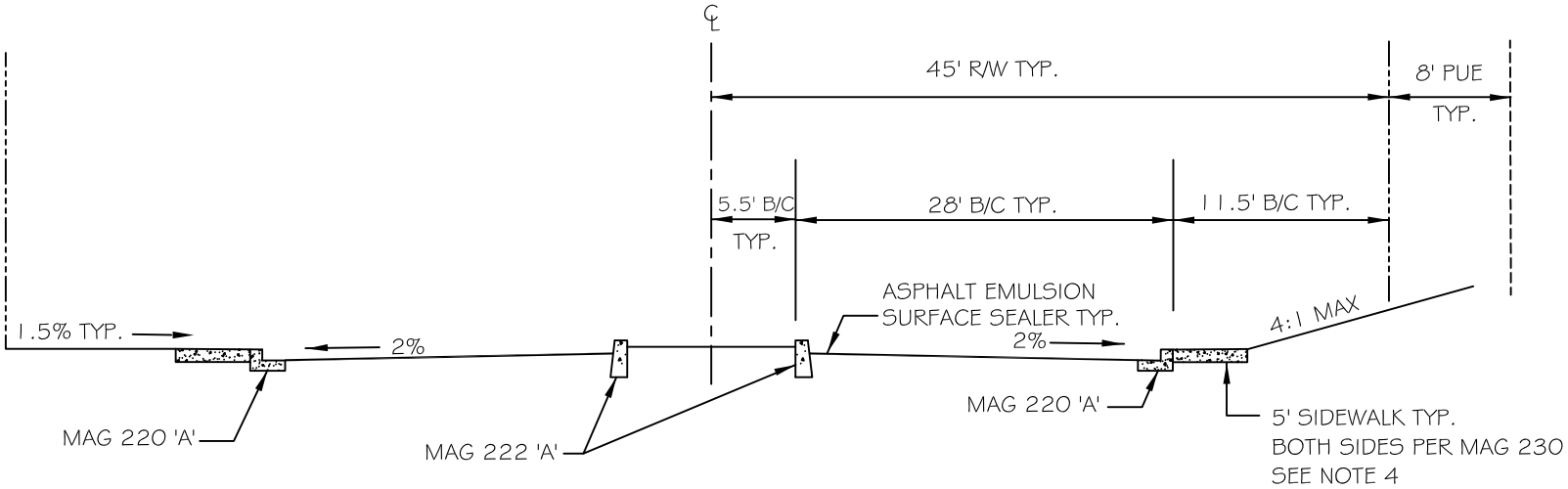

NOTES:

1. THE SUBGRADE SHALL BE PREPARED IN ACCORDANCE WITH MAG STANDARD SPECIFICATIONS, SEC. 301.
2. BASE COURSE:
   A. THE THICKNESS SHALL CONFORM TO COC STANDARD DETAIL C-240.
   B. ALL CONSTRUCTION AND MATERIALS SHALL CONFORM TO MAG STANDARD SPECIFICATIONS, SECS. 310 AND 702.
3. ASPHALTIC CONCRETE PAVEMENT:
   A. THE PAVEMENT SHALL BE 3" THICK A-12.5 EVAC ASPHALTIC CONCRETE.
   B. AREAS OF VISIBLE MIXTURE SEGREGATION SHALL BE MILLED TO A DEPTH OF 2" AND OVERLAID A MINIMUM OF THE LANE WIDTH.
   C. ALL CONSTRUCTION AND MATERIALS SHALL CONFORM TO EVAC AND MAG STANDARD SPECIFICATIONS, SECS. 321 AND 710.
   D. PRESERVATIVE SEAL COAT CONFORMING TO MAG SECTION 334 AND SHALL BE AN ASPHALT EMULSION SURFACE SEALER PER SECTION 718.3. APPLICATION PER PAVING CONSTRUCTION NOTE.
4. WHEN IN THE BEST INTEREST OF THE CITY, THE PUBLIC WORKS DIRECTOR, OR DESIGNEE, MAY WAIVE SIDEWALK ON ONE SIDE OF ROADWAY IN INDUSTRIAL AREAS. SIDEWALK WIDTH MAY BE MODIFIED TO 4' MIN PROVIDED THAT, PER ADA, A 5' BY 5' PASSING AREA IS PROVIDED EVERY 200'.
5. RAMP END OF MEDIAN PER COC STANDARD DETAIL C-225.
6. MEDIAN LANDSCAPE AREA SHALL BE PER COC STANDARD DETAIL C-807.
7. 0.2% MINIMUM LONGITUDINAL GRADE ALLOWED.

DETAIL NO.					DETAIL NO.
C-206	CITY OF CHANDLER STANDARD DETAIL	**COLLECTOR STREET WITH MEDIAN TYPICAL CROSS SECTION**	APPROVED: CITY ENGINEER		**C-206**
NTS			DATE: 01-09-2020		NTS

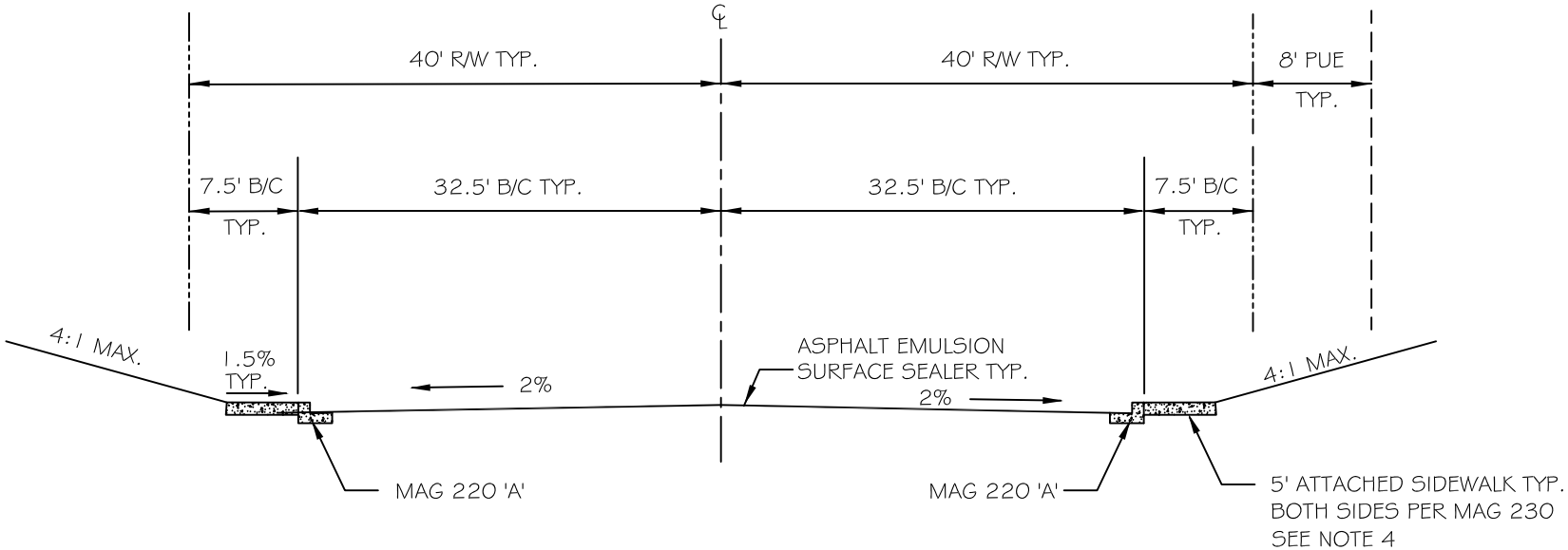

NOTES:

1. THE SUBGRADE SHALL BE PREPARED IN ACCORDANCE WITH MAG STANDARD SPECIFICATIONS, SEC. 301.
2. BASE COURSE:
   A. THE THICKNESS SHALL CONFORM TO COC STANDARD DETAIL C-240.
   B. ALL CONSTRUCTION AND MATERIALS SHALL CONFORM TO MAG STANDARD SPECIFICATIONS, SECS. 310 AND 702.
3. ASPHALTIC CONCRETE PAVEMENT:
   A. THE PAVEMENT SHALL BE 3" THICK A-12.5 EVAC ASPHALTIC CONCRETE.
   B. AREAS OF VISIBLE MIXTURE SEGREGATION SHALL BE MILLED TO A DEPTH OF 2" AND OVERLAID A MINIMUM OF THE LANE WIDTH.
   C. ALL CONSTRUCTION AND MATERIALS SHALL CONFORM TO EVAC AND MAG STANDARD SPECIFICATIONS, SECS. 321 AND 710.
   D. PRESERVATIVE SEAL COAT CONFORMING TO MAG SECTION 334 AND SHALL BE AN ASPHALT EMULSION SURFACE SEALER PER SECTION 718.3. APPLICATION PER PAVING CONSTRUCTION NOTE.
4. WHEN IN THE BEST INTEREST OF THE CITY, THE PUBLIC WORKS DIRECTOR, OR DESIGNEE, MAY WAIVE SIDEWALK ON ONE OR BOTH SIDES OF ROADWAY. SIDEWALK WIDTH MAY BE MODIFIED TO 4' MIN PROVIDED THAT, PER ADA, A 5' BY 5' PASSING AREA IS PROVIDED EVERY 200'.
5. 0.2% MINIMUM LONGITUDINAL GRADE ALLOWED.

DETAIL NO.					DETAIL NO.
C-208	CITY OF CHANDLER STANDARD DETAIL	**INDUSTRIAL COLLECTOR STREET TYPICAL CROSS SECTION**	APPROVED: CITY ENGINEER		**C-208**
NTS			DATE: 01-09-2020		NTS

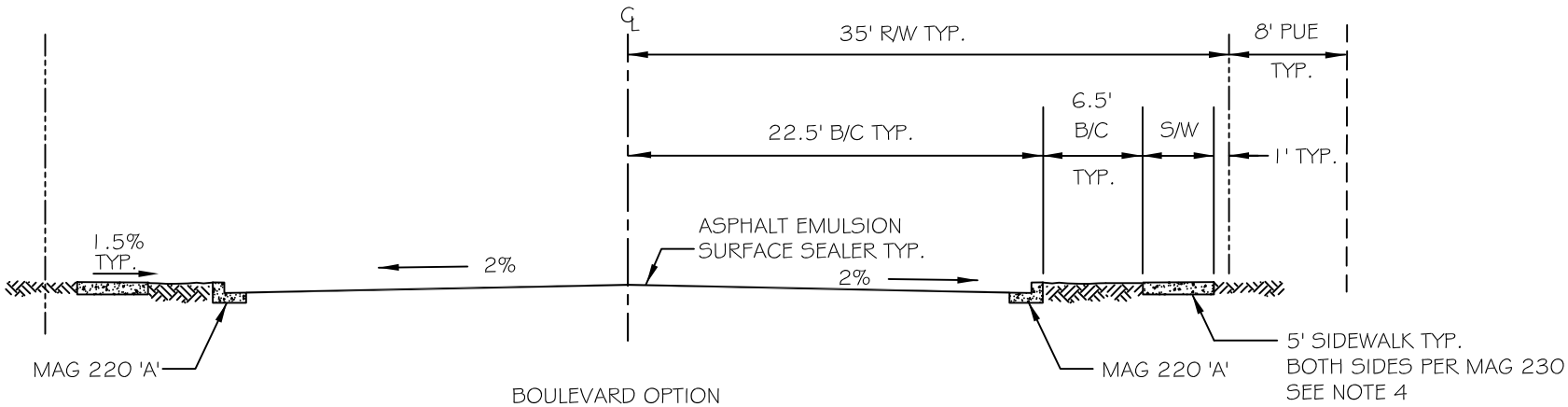

NOTES:

1. THE SUBGRADE SHALL BE PREPARED IN ACCORDANCE WITH MAG STANDARD SPECIFICATIONS, SEC. 301.
2. BASE COURSE:
   A. THE THICKNESS SHALL CONFORM TO COC STANDARD DETAIL C-241 FOR RESIDENTIAL AREAS AND COC STANDARD DETAIL C-240 FOR ALL OTHER AREAS.
   B. ALL CONSTRUCTION AND MATERIALS SHALL CONFORM TO MAG STANDARD SPECIFICATIONS, SECS. 310 AND 702.
3. ASPHALTIC CONCRETE PAVEMENT:
   A. THE PAVEMENT SHALL BE 3" THICK A-12.5 EVAC ASPHALTIC CONCRETE.
   B. AREAS OF VISIBLE MIXTURE SEGREGATION SHALL BE MILLED TO A DEPTH OF 2" AND OVERLAID A MINIMUM OF THE LANE WIDTH.
   C. ALL CONSTRUCTION AND MATERIALS SHALL CONFORM TO EVAC AND MAG STANDARD SPECIFICATIONS, SECS. 321 AND 710.
   D. PRESERVATIVE SEAL COAT CONFORMING TO MAG SECTION 334 AND SHALL BE AN ASPHALT EMULSION SURFACE SEALER PER SECTION 718.3. APPLICATION PER PAVING CONSTRUCTION NOTE.
4. WHEN IN THE BEST INTEREST OF THE CITY, THE PUBLIC WORKS DIRECTOR, OR DESIGNEE, MAY WAIVE SIDEWALK ON ONE SIDE OF ROADWAY OR ON BOTH SIDES IN INDUSTRIAL AREAS. SIDEWALK WIDTH MAY BE MODIFIED TO 4' MIN PROVIDED THAT, PER ADA, A 5' BY 5' PASSING AREA IS PROVIDED EVERY 200'.
5. 0.2% MINIMUM LONGITUDINAL GRADE ALLOWED.
6. DUCTILE IRON WATER LINE UNDER STREET; METERS BACK OF WALK.

DETAIL NO.					DETAIL NO.
C-209	CITY OF CHANDLER STANDARD DETAIL	**COLLECTOR BOULEVARD TYPICAL CROSS SECTION**	APPROVED: CITY ENGINEER		**C-209**
NTS			DATE: 01-09-2020		NTS

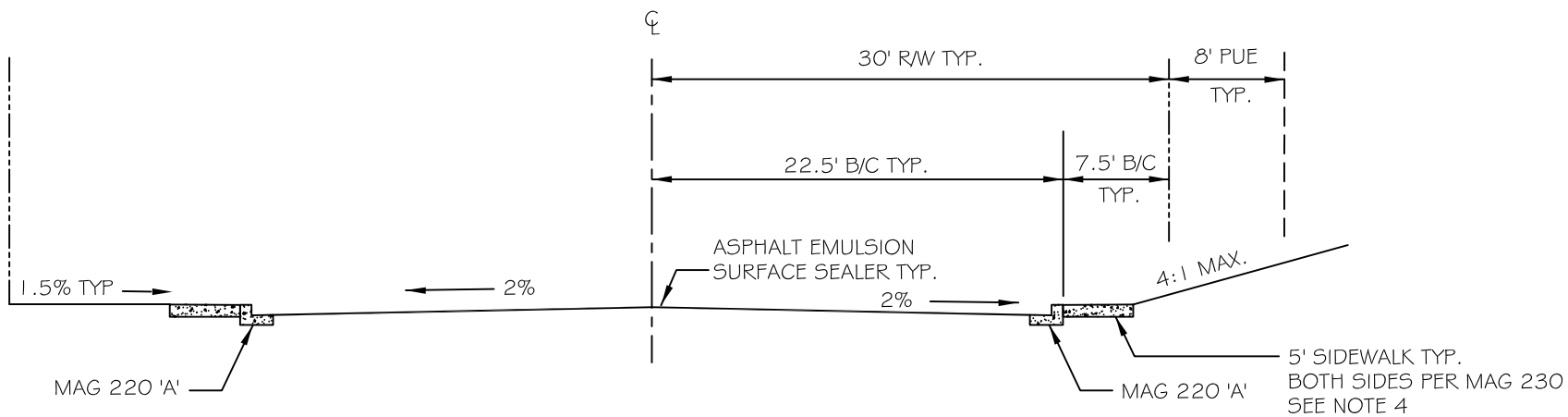

NOTES:

1. THE SUBGRADE SHALL BE PREPARED IN ACCORDANCE WITH MAG STANDARD SPECIFICATIONS, SEC. 301.
2. BASE COURSE:
   A. THE THICKNESS SHALL CONFORM TO COC STANDARD DETAIL C-241 FOR RESIDENTIAL AREAS AND COC STANDARD DETAIL C-240 FOR ALL OTHER AREAS.
   B. ALL CONSTRUCTION AND MATERIALS SHALL CONFORM TO MAG STANDARD SPECIFICATIONS, SECS. 310 AND 702.
3. ASPHALTIC CONCRETE PAVEMENT:
   A. THE PAVEMENT SHALL BE 3" THICK A-12.5 EVAC ASPHALTIC CONCRETE.
   B. AREAS OF VISIBLE MIXTURE SEGREGATION SHALL BE MILLED TO A DEPTH OF 2" AND OVERLAID A MINIMUM OF THE LANE WIDTH.
   C. ALL CONSTRUCTION AND MATERIALS SHALL CONFORM TO EVAC AND MAG STANDARD SPECIFICATIONS, SECS. 321 AND 710.
   D. PRESERVATIVE SEAL COAT CONFORMING TO MAG SECTION 334 AND SHALL BE AN ASPHALT EMULSION SURFACE SEALER PER SECTION 718.3. APPLICATION PER PAVING CONSTRUCTION NOTE.
4. WHEN IN THE BEST INTEREST OF THE CITY, THE PUBLIC WORKS DIRECTOR, OR DESIGNEE, MAY WAIVE SIDEWALK ON ONE SIDE OF ROADWAY OR ON BOTH SIDES IN INDUSTRIAL AREAS. SIDEWALK WIDTH MAY BE MODIFIED TO 4' MIN PROVIDED THAT, PER ADA, A 5' BY 5' PASSING AREA IS PROVIDED EVERY 200'.
5. 0.2% MINIMUM LONGITUDINAL GRADE ALLOWED.

DETAIL NO.					DETAIL NO.
C-210	CITY OF CHANDLER STANDARD DETAIL	**COLLECTOR STREET TYPICAL CROSS SECTION**	APPROVED: CITY ENGINEER		**C-210**
NTS			DATE: 01-09-2020		NTS

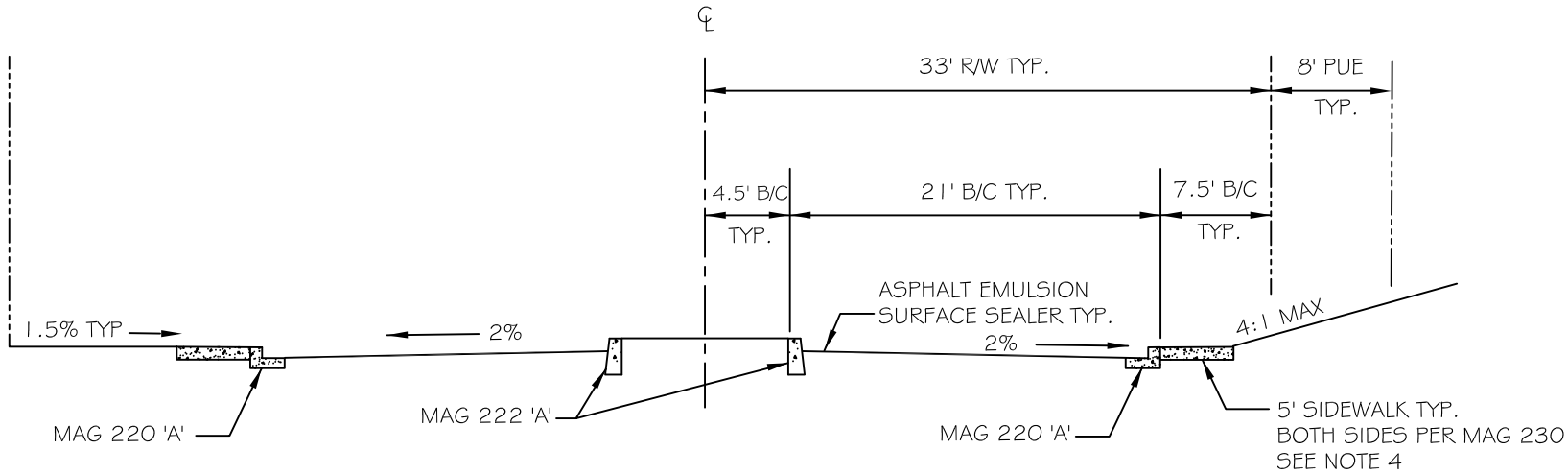

NOTES:

1. THE SUBGRADE SHALL BE PREPARED IN ACCORDANCE WITH MAG STANDARD SPECIFICATIONS, SEC. 301.
2. BASE COURSE:
   A. THE THICKNESS SHALL CONFORM TO COC STANDARD DETAIL C-242.
   B. ALL CONSTRUCTION AND MATERIALS SHALL CONFORM TO MAG STANDARD SPECIFICATIONS, SECS. 310 AND 702.
3. ASPHALTIC CONCRETE PAVEMENT:
   A. THE PAVEMENT SHALL BE 3" THICK R-12.5 EVAC ASPHALTIC CONCRETE.
   B. ALL CONSTRUCTION AND MATERIALS SHALL CONFORM TO MAG STANDARD SPECIFICATIONS, SECS. 321 AND 710.
   C. PRESERVATIVE SEAL COAT CONFORMING TO MAG SECTION 334 AND SHALL BE AN ASPHALT EMULSION SURFACE SEALER PER SECTION 718.3. APPLICATION PER PAVING CONSTRUCTION NOTE.
4. SIDEWALK WIDTH MAY BE MODIFIED TO 4' MIN PROVIDED THAT, PER ADA, A 5' BY 5' PASSING AREA IS PROVIDED EVERY 200'.
5. NO PARKING IS PERMITTED.
6. RAMP END OF MEDIAN PER COC STANDARD DETAIL C-225.
7. MEDIAN LANDSCAPE AREA SHALL BE PER COC STANDARD DETAIL C-807.
8. 0.2% MINIMUM LONGITUDINAL GRADE ALLOWED.

DETAIL NO.					DETAIL NO.
C-211	CITY OF CHANDLER STANDARD DETAIL	**LOCAL STREET WITH MEDIAN TYPICAL CROSS SECTION**	APPROVED: CITY ENGINEER		**C-211**
NTS			DATE: 01-09-2020		NTS

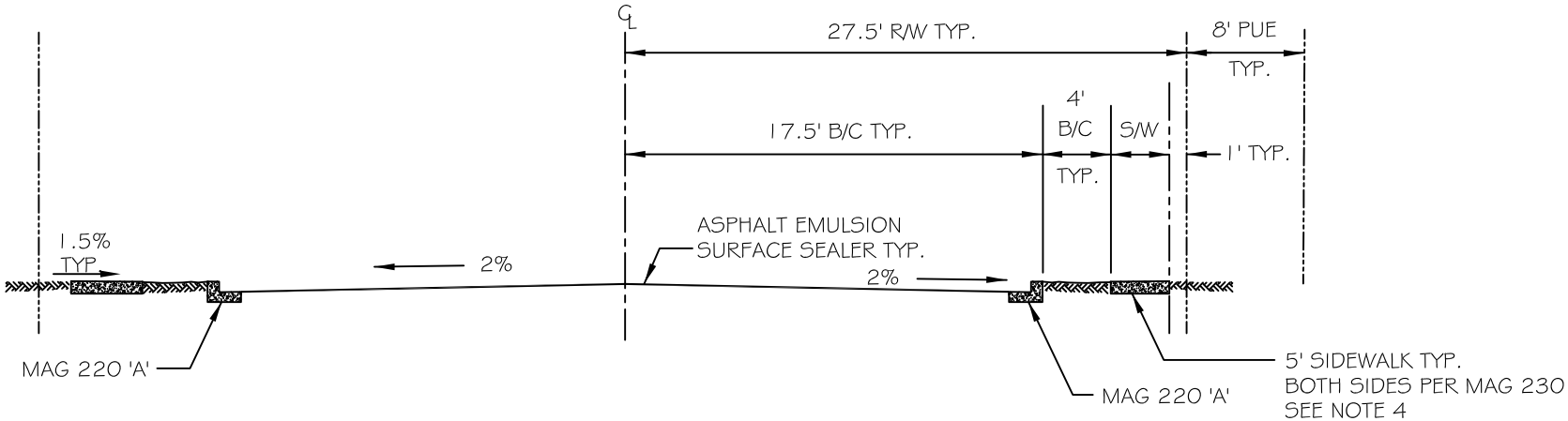

NOTES:

1. THE SUBGRADE SHALL BE PREPARED IN ACCORDANCE WITH MAG STANDARD SPECIFICATIONS, SEC. 301.
2. BASE COURSE:
   A. THE THICKNESS SHALL CONFORM TO COC STANDARD DETAIL C-241 FOR RESIDENTIAL AREAS AND COC STANDARD DETAIL C-240 FOR ALL OTHER AREAS.
   B. ALL CONSTRUCTION AND MATERIALS SHALL CONFORM TO MAG STANDARD SPECIFICATIONS, SECS. 310 AND 702.
3. ASPHALTIC CONCRETE PAVEMENT:
   A. THE PAVEMENT SHALL BE 3" THICK R-12.5 EVAC ASPHALTIC CONCRETE.
   B. ALL CONSTRUCTION AND MATERIALS SHALL CONFORM TO MAG STANDARD SPECIFICATIONS, SECS. 321 AND 710.
   C. PRESERVATIVE SEAL COAT CONFORMING TO MAG SECTION 334 AND SHALL BE AN ASPHALT EMULSION SURFACE SEALER PER SECTION 718.3. APPLICATION PER PAVING CONSTRUCTION NOTE.
4. WHEN IN THE BEST INTEREST OF THE CITY, THE PUBLIC WORKS DIRECTOR, OR DESIGNEE, MAY WAIVE SIDEWALK ON ONE OR BOTH SIDES OF ROADWAY IN INDUSTRIAL AREAS. SIDEWALK WIDTH MAY BE MODIFIED TO 4' MIN PROVIDED THAT, PER ADA, A 5' BY 5' PASSING AREA IS PROVIDED EVERY 200'.
5. 0.2% MINIMUM LONGITUDINAL GRADE ALLOWED.
6. ALLOWED FOR MULTI-FAMILY DEVELOPMENTS, OR SINGLE FAMILY RESIDENTIAL DEVELOPMENTS WITH FRONTAGES LESS THAN 65'.
7. DUCTILE IRON WATER LINE UNDER STREET; METERS BACK OF WALK.

DETAIL NO.				
C-212	CITY OF CHANDLER STANDARD DETAIL	**LOCAL BOULEVARD WITH FRONTAGES LESS THAN 65' TYPICAL CROSS SECTION**	APPROVED: CITY ENGINEER DATE: 01-09-2020	**C-212**
NTS				NTS

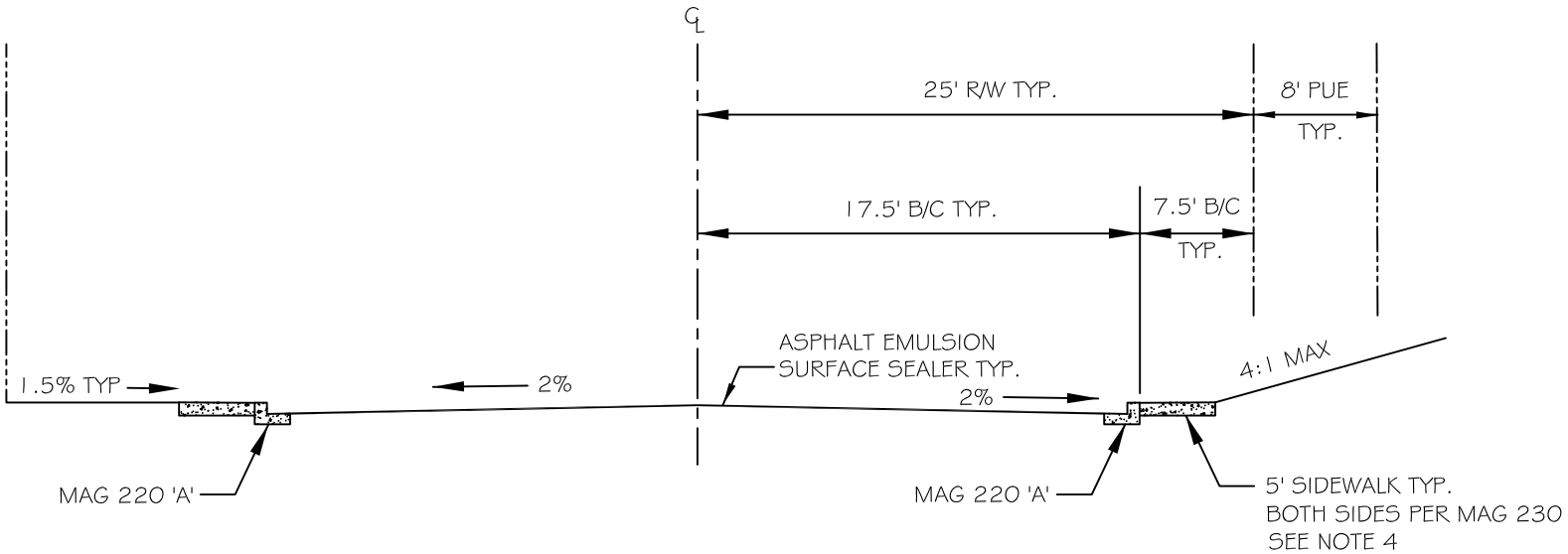

NOTES:

1. THE SUBGRADE SHALL BE PREPARED IN ACCORDANCE WITH MAG STANDARD SPECIFICATIONS, SEC. 301.
2. BASE COURSE:
   A. THE THICKNESS SHALL CONFORM TO COC STANDARD DETAIL C-242.
   B. ALL CONSTRUCTION AND MATERIALS SHALL CONFORM TO MAG STANDARD SPECIFICATIONS, SECS. 310 AND 702.
3. ASPHALTIC CONCRETE PAVEMENT:
   A. THE PAVEMENT SHALL BE 3" THICK R-12.5 EVAC ASPHALTIC CONCRETE.
   B. ALL CONSTRUCTION AND MATERIALS SHALL CONFORM TO MAG STANDARD SPECIFICATIONS, SECS. 321 AND 710.
   C. PRESERVATIVE SEAL COAT CONFORMING TO MAG SECTION 334 AND SHALL BE AN ASPHALT EMULSION SURFACE SEALER PER SECTION 718.3. APPLICATION PER PAVING CONSTRUCTION NOTE.
4. SIDEWALK WIDTH MAY BE MODIFIED TO 4' MIN PROVIDED THAT, PER ADA, A 5' BY 5' PASSING AREA IS PROVIDED EVERY 200'.
5. 0.2% MINIMUM LONGITUDINAL GRADE ALLOWED.
6. IF ALL ABUTTING LOT FRONTAGES EXCEED 65', STREET WIDTH MAY BE REDUCED TO 32' (B.C.) AND ROW WIDTH MAY BE REDUCED TO 42'.
7. IF ALL ABUTTING LOT FRONTAGES EXCEED 90', STREET WIDTH MAY BE REDUCED TO 29' (B.C.) AND ROW WIDTH MAY BE REDUCED TO 42'.

DETAIL NO.					DETAIL NO.
C-213	CITY OF CHANDLER STANDARD DETAIL	**LOCAL STREET TYPICAL CROSS SECTION**	APPROVED: CITY ENGINEER		**C-213**
NTS			DATE: 01-09-2020		NTS

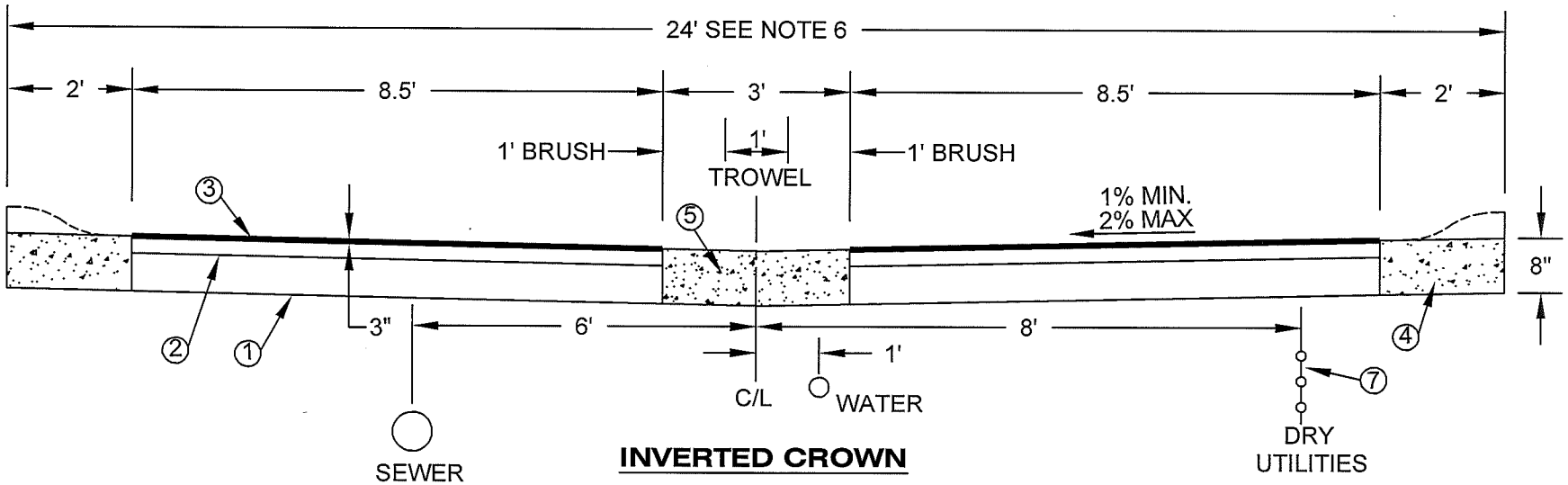

INVERTED CROWN

1. THE SUBGRADE SHALL BE PREPARED IN ACCORDANCE WITH MAG STANDARD SPECIFICATIONS, SEC. 301.

2. BASE COURSE:
   A. THE THICKNESS SHALL CONFORM TO COC STD. DTL. C-242.
   B. ALL CONSTRUCTION AND MATERIALS SHALL CONFORM TO MAG STD. SPECIFICATIONS, SEC. 310 AND 702.

3. ASPHALTIC CONCRETE PAVEMENT:
   A. THE PAVEMENT SHALL BE MINIMUM 3" THICK R-12.5 EVAC ASPHALTIC CONCRETE.
   B. ALL CONSTRUCTION AND MATERIALS SHALL CONFORM TO MAG STD. SPECIFICATIONS, SEC. 321 AND 710.
   C. PRESERVATIVE SEAL COAT CONFORMING TO MAG SEC. 334 AND SHALL BE TRMSS PER SEC. 718. APPLICATION PER PAVING CONSTRUCTION NOTE.

4. CONCRETE RIBBON CURB PER MAG DTL. 220-1 (TYPE B) OR ROLL CURB PER MAG DTL. 200-1 (TYPE C). CONCRETE SHALL BE CLASS "B" PER MAG SEC. 725 AND INSTALLED PER MAG SEC. 505.

5. VALLEY GUTTER SHALL BE CLASS "B" PER MAG SEC. 725 AND INSTALLED PER MAG SEC. 505. BRUSH / TROWEL SURFACES AS SHOWN.

6. EASEMENTS REQUIRED OVER PRIVATE DRIVE:
   A. WATER AND SEWER EASEMENT.
   B. PUBLIC UTILITY EASEMENT.
   C. CROSS ACCESS EASEMENT.
   D. DRAINAGE EASEMENT.

7. ALL DRY UTILITIES WILL BE TRENCHED WITHIN THE 24' PUE.

DETAIL NO.					DETAIL NO.
C-214	CITY OF CHANDLER STANDARD DETAIL	**PRIVATE SHARED DRIVEWAY TYPICAL CROSS SECTION & UTILITIES**	APPROVED: CITY ENGINEER		**C-214**
NTS			DATE: 1-9-14		NTS

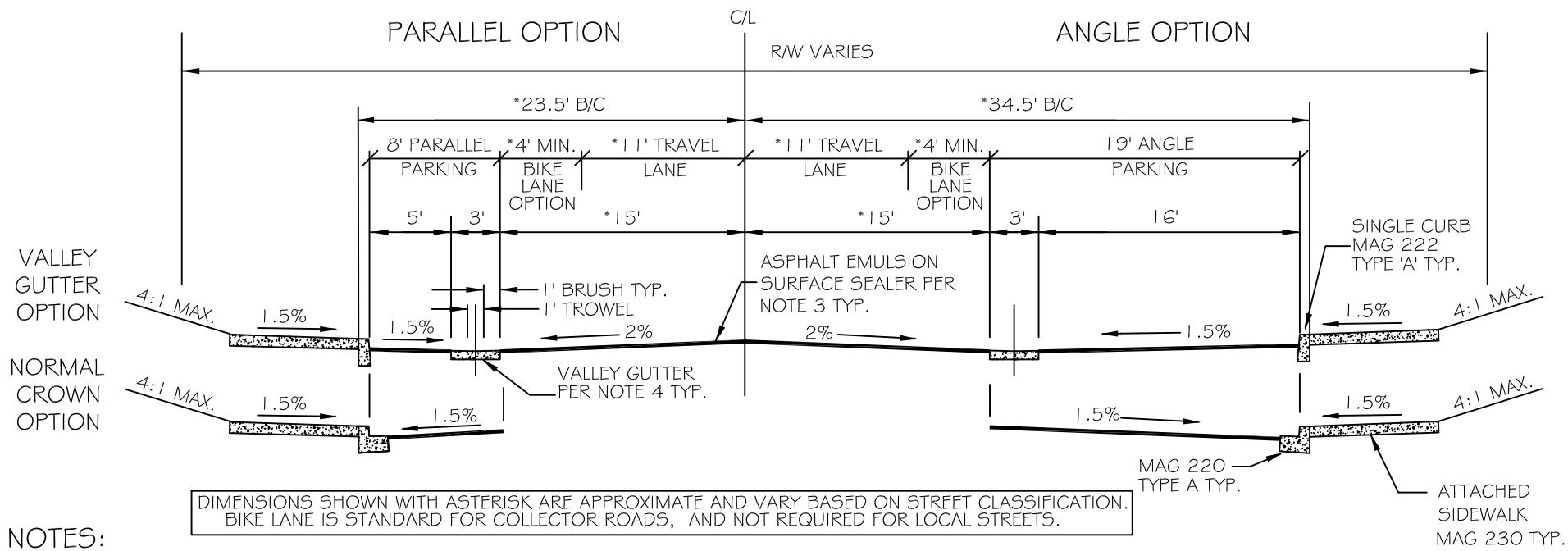

DIMENSIONS SHOWN WITH ASTERISK ARE APPROXIMATE AND VARY BASED ON STREET CLASSIFICATION. BIKE LANE IS STANDARD FOR COLLECTOR ROADS, AND NOT REQUIRED FOR LOCAL STREETS.

NOTES:

1. THE SUBGRADE SHALL BE PREPARED IN ACCORDANCE WITH MAG STANDARD SPECIFICATIONS, SEC. 301.
2. BASE COURSE:
   A. THE THICKNESS SHALL CONFORM TO COC STANDARD DETAIL C-240.
   B. ALL CONSTRUCTION AND MATERIALS SHALL CONFORM TO MAG STANDARD SPECIFICATIONS, SECS. 310 AND 702.
3. ASPHALTIC CONCRETE PAVEMENT:
   A. THE PAVEMENT SHALL BE 3" THICK A-12.5 EVAC ASPHALTIC CONCRETE.
   B. AREAS OF VISIBLE MIXTURE SEGREGATION SHALL BE MILLED TO A DEPTH OF 2" AND OVERLAID A MINIMUM OF THE LANE WIDTH.
   C. ALL CONSTRUCTION AND MATERIALS SHALL CONFORM TO EVAC AND MAG STANDARD SPECIFICATIONS, SECS. 321 AND 710.
   D. PRESERVATIVE SEAL COAT CONFORMING TO MAG SECTION 334 AND SHALL BE AN ASPHALT EMULSION SURFACE SEALER PER SECTION 718.3. APPLICATION PER PAVING CONSTRUCTION NOTE.
4. VALLEY GUTTER SHALL BE 9" THICK CLASS "B" PER MAG SEC 725 AND INSTALLED PER MAG SEC 505. BRUSH / TROWEL SURFACES AS SHOWN. CROSS SLOPE GRADES NOT TO EXCEED 2%.
5. MINIMUM LONGITUDINAL GRADE IS 0.2%.
6. ON-STREET PARKING SHALL COMPLY WITH CITY STREET DESIGN AND ACCESS CONTROL TDM #4, SECTION 5. SEE ALSO COC STD DTL C-260.

DETAIL NO.					DETAIL NO.
C-215	CITY OF CHANDLER STANDARD DETAIL	**ON-STREET PARKING TYPICAL CROSS SECTION**	APPROVED: CITY ENGINEER		**C-215**
NTS			DATE: 01-09-2020		NTS

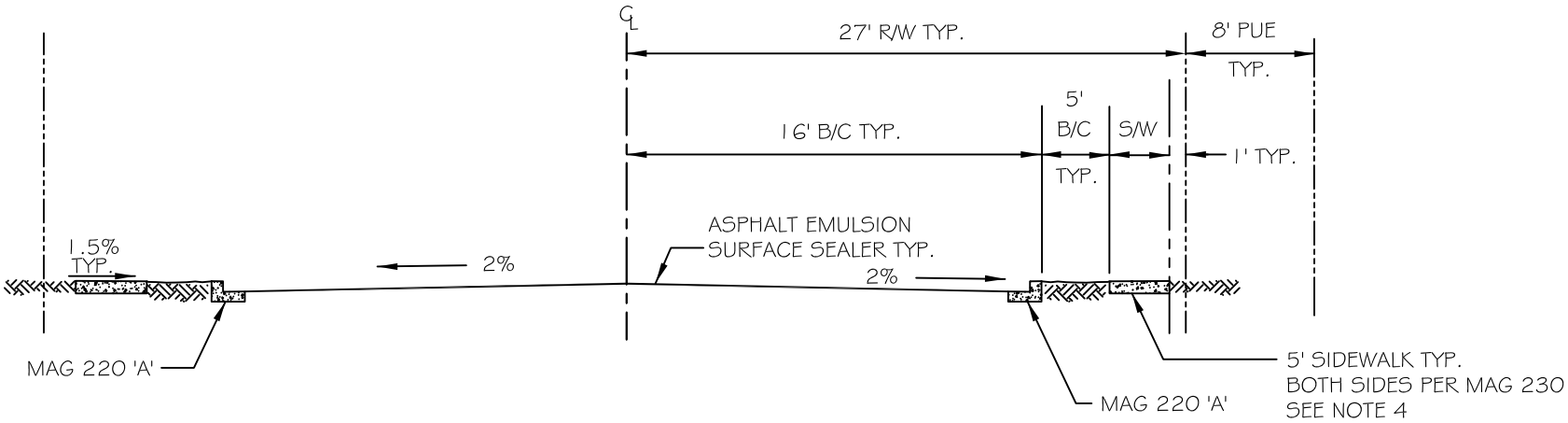

NOTES:

1. THE SUBGRADE SHALL BE PREPARED IN ACCORDANCE WITH MAG STANDARD SPECIFICATIONS, SEC. 301.
2. BASE COURSE:
   A. THE THICKNESS SHALL CONFORM TO COC STANDARD DETAIL C-241 FOR RESIDENTIAL AREAS AND COC STANDARD DETAIL C-240 FOR ALL OTHER AREAS.
   B. ALL CONSTRUCTION AND MATERIALS SHALL CONFORM TO MAG STANDARD SPECIFICATIONS, SECS. 310 AND 702.
3. ASPHALTIC CONCRETE PAVEMENT:
   A. THE PAVEMENT SHALL BE 3" THICK R-12.5 EVAC ASPHALTIC CONCRETE.
   B. ALL CONSTRUCTION AND MATERIALS SHALL CONFORM TO MAG STANDARD SPECIFICATIONS, SECS. 321 AND 710.
   C. PRESERVATIVE SEAL COAT CONFORMING TO MAG SECTION 334 AND SHALL BE AN ASPHALT EMULSION SURFACE SEALER PER SECTION 718.3. APPLICATION PER PAVING CONSTRUCTION NOTE.
4. WHEN IN THE BEST INTEREST OF THE CITY, THE PUBLIC WORKS DIRECTOR, OR DESIGNEE, MAY WAIVE SIDEWALK ON ONE OR BOTH SIDES OF ROADWAY IN INDUSTRIAL AREAS. SIDEWALK WIDTH MAY BE MODIFIED TO 4' MIN PROVIDED THAT, PER ADA, A 5' BY 5' PASSING AREA IS PROVIDED EVERY 200'.
5. 0.2% MINIMUM LONGITUDINAL GRADE ALLOWED.
6. ALLOWED ONLY FOR SINGLE FAMILY RESIDENTIAL DEVELOPMENTS WITH FRONTAGES OF 65' TO 90'.
7. DUCTILE IRON WATER LINE UNDER STREET; METERS BACK OF WALK.

DETAIL NO.					DETAIL NO.
C-221	CITY OF CHANDLER STANDARD DETAIL	**LOCAL BOULEVARD WITH FRONTAGES OF 65' TO 90' TYPICAL CROSS SECTION**	APPROVED: CITY ENGINEER		**C-221**
NTS			DATE: 01-09-2020		NTS

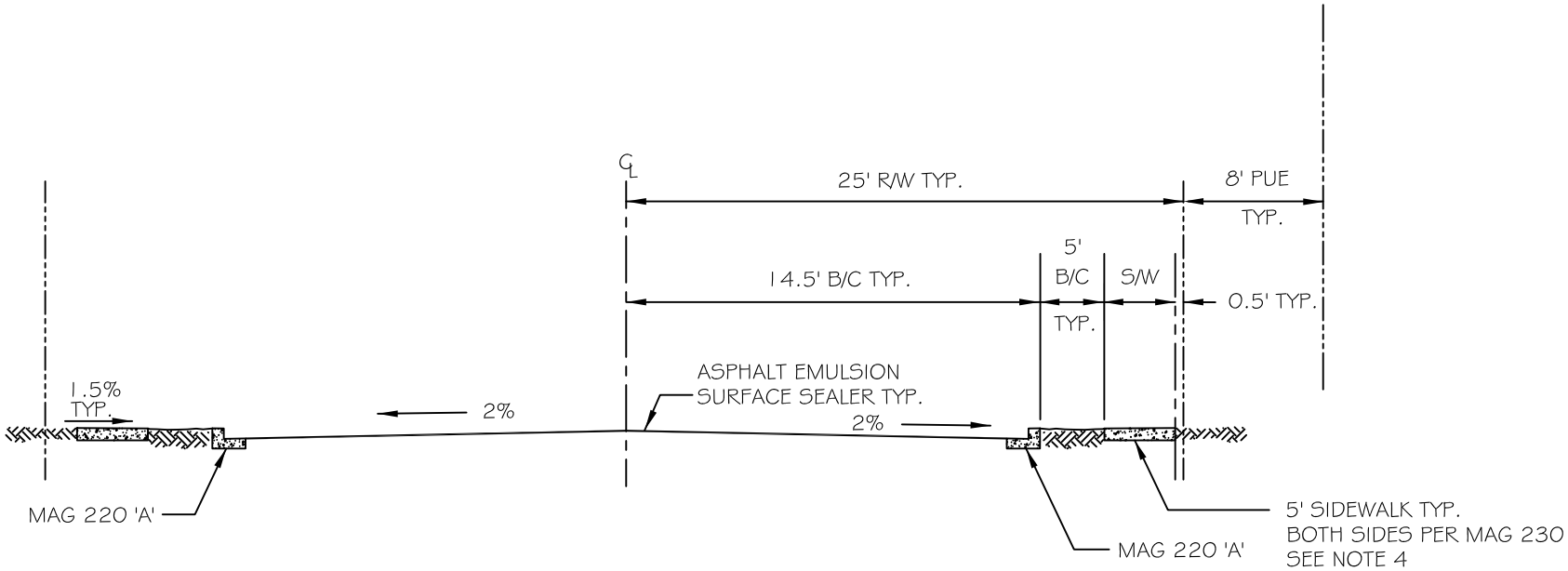

NOTES:

1. THE SUBGRADE SHALL BE PREPARED IN ACCORDANCE WITH MAG STANDARD SPECIFICATIONS, SEC. 301.
2. BASE COURSE:
   A. THE THICKNESS SHALL CONFORM TO COC STANDARD DETAIL C-241 FOR RESIDENTIAL AREAS AND COC STANDARD DETAIL C-240
   B. ALL CONSTRUCTION AND MATERIALS SHALL CONFORM TO MAG STANDARD SPECIFICATIONS, SECS. 310 AND 702. FOR ALL OTHER AREAS.
3. ASPHALTIC CONCRETE PAVEMENT:
   A. THE PAVEMENT SHALL BE 3" THICK R-12.5 EVAC ASPHALTIC CONCRETE.
   B. ALL CONSTRUCTION AND MATERIALS SHALL CONFORM TO MAG STANDARD SPECIFICATIONS, SECS. 321 AND 710.
   C. PRESERVATIVE SEAL COAT CONFORMING TO MAG SECTION 334 AND SHALL BE AN ASPHALT EMULSION SURFACE SEALER PER SECTION 718.3. APPLICATION PER PAVING CONSTRUCTION NOTE.
4. WHEN IN THE BEST INTEREST OF THE CITY, THE PUBLIC WORKS DIRECTOR, OR DESIGNEE, MAY WAIVE SIDEWALK ON ONE OR BOTH SIDES OF ROADWAY IN INDUSTRIAL AREAS. SIDEWALK WIDTH MAY BE MODIFIED TO 4' MIN PROVIDED THAT, PER ADA, A 5' BY 5' PASSING AREA IS PROVIDED EVERY 200'.
5. 0.2% MINIMUM LONGITUDINAL GRADE ALLOWED.
6. ALLOWED ONLY FOR SINGLE FAMILY RESIDENTIAL DEVELOPMENTS WITH FRONTAGES GREATER THAN 90'.
7. DUCTILE IRON WATER LINE UNDER STREET; METERS BACK OF WALK.

DETAIL NO.					DETAIL NO.
C-222	CITY OF CHANDLER STANDARD DETAIL	**LOCAL BOULEVARD WITH FRONTAGES GREATER THAN 90' TYPICAL CROSS SECTION**	APPROVED: CITY ENGINEER		**C-222**
NTS			DATE: 01-09-2020		NTS

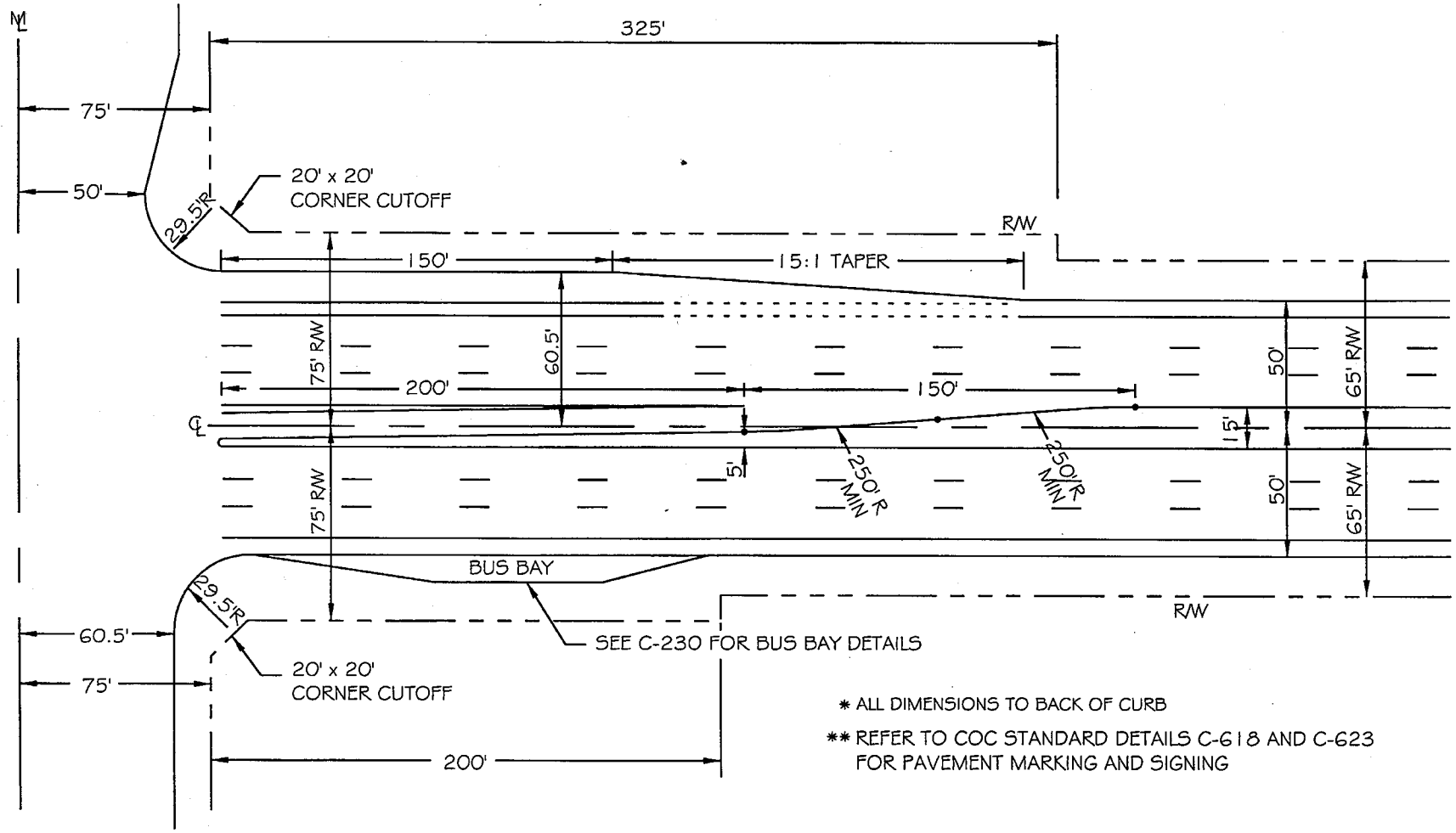

* ALL DIMENSIONS TO BACK OF CURB

** REFER TO COC STANDARD DETAILS C-618 AND C-623 FOR PAVEMENT MARKING AND SIGNING

DETAIL NO.					
C-223	CITY OF CHANDLER STANDARD DETAIL	**STANDARD MAJOR ARTERIAL/MAJOR ARTERIAL INTERSECTION RIGHT-OF-WAY, AND STREET DIMENSIONS**	APPROVED: Elizabeth Wood CITY ENGINEER	DATE: 2/26/07	DETAIL NO. **C-223**
NTS					PAGE 1 OF 2

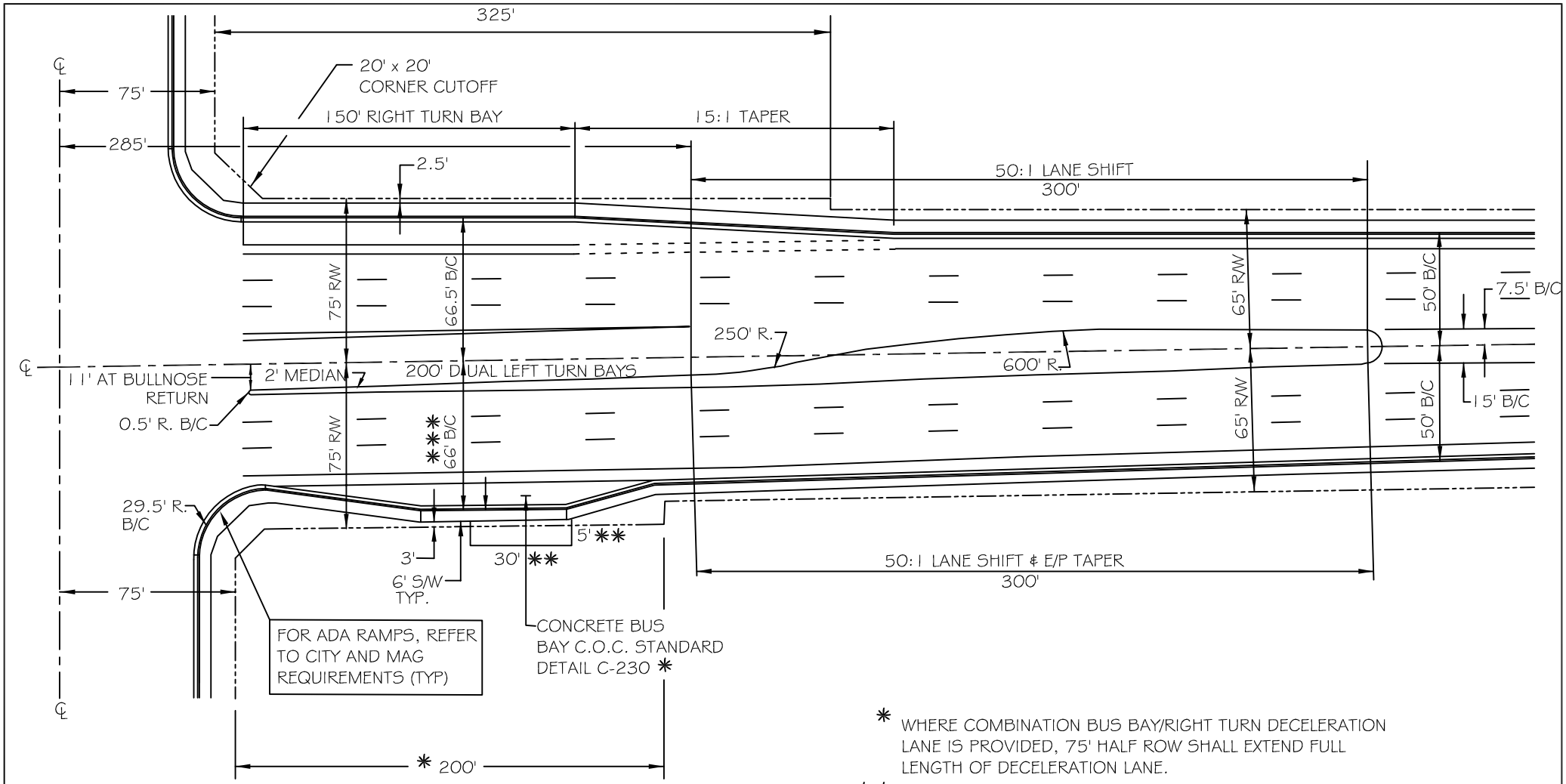

* WHERE COMBINATION BUS BAY/RIGHT TURN DECELERATION LANE IS PROVIDED, 75' HALF ROW SHALL EXTEND FULL LENGTH OF DECELERATION LANE.

** ADDITIONAL 5' X 30' EASEMENT SHALL BE REQUIRED OF DEVELOPER FOR BUS SHELTER PAD.

*** 66.5' B/C AND 2.5' FOR INTEGRAL BUS BAY/DECELERATION LANE, SEE C.O.C. STANDARD DETAIL C-231.

**** REFER TO COC STANDARD DETAIL C-619 AND C-623 FOR PAVEMENT MARKING AND SIGNING.

NOTES:

50 : 1 TAPERS FOR REDIRECTION OF THROUGH LANES

15 : 1 TAPERS FOR RIGHT TURN BAY APPROACHES

DETAIL NO.					DETAIL NO.
C-223	CITY OF CHANDLER STANDARD DETAIL	**ULTIMATE MAJOR ARTERIAL/MAJOR ARTERIAL INTERSECTION RIGHT-OF-WAY, STREET DIMENSIONS**	APPROVED: CITY ENGINEER		**C-223**
PAGE 2 OF 2			DATE: 3/14/2013		PAGE 2 OF 2

* REFER TO COC DETAIL C-620 FOR PAVEMENT MARKING AND SIGNING

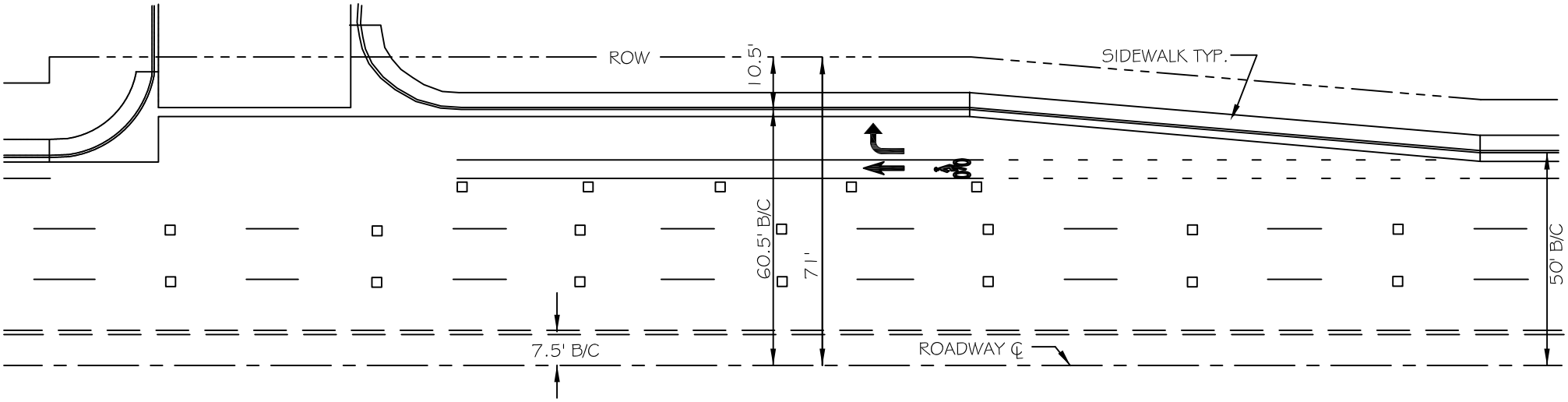

DETAIL NO.					DETAIL NO.
C-224	CITY OF CHANDLER STANDARD DETAIL	**MAJOR ARTERIAL DECELERATION LANE**	APPROVED: CITY ENGINEER		**C-224**
NTS			DATE: 01-09-2020		NTS

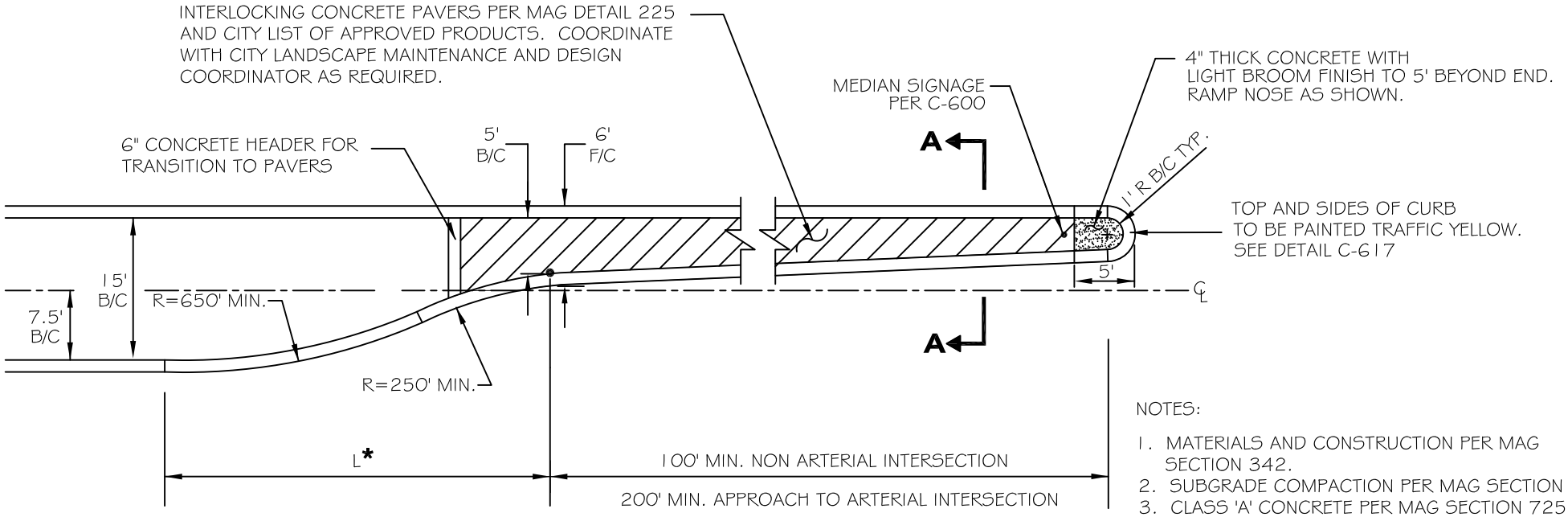

* TAPER LENGTH 'L' = $\frac{WS}{3}$, WHERE 'W' IS TURN LANE WIDTH IN FEET AND 'S' IS DESIGN SPEED IN MPH. MINIMUM 'L' = 100'

NOTES:

1. MATERIALS AND CONSTRUCTION PER MAG SECTION 342.
2. SUBGRADE COMPACTION PER MAG SECTION 301.
3. CLASS 'A' CONCRETE PER MAG SECTION 725.
4. FOR MEDIAN WIDTHS LESS THAN 18", INSTALL 4" THICK CONCRETE WITH LIGHT BROOM FINISH OR AS SPECIFIED ON PLANS.

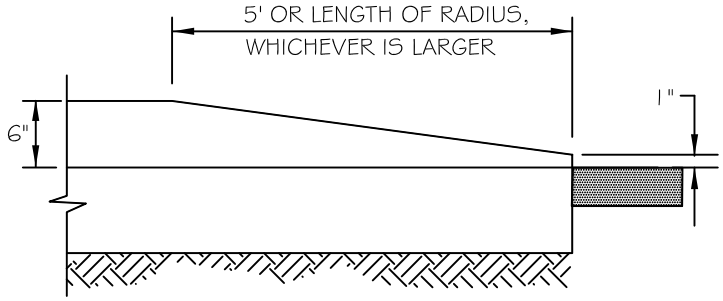

END OF MEDIAN RAMP

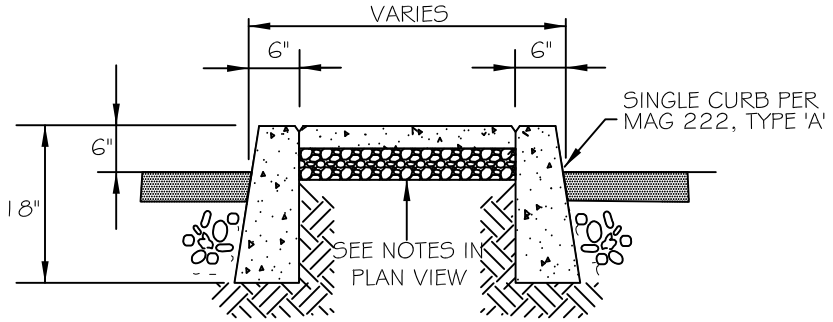

SECTION A - A

DETAIL NO.					DETAIL NO.
C-225	CITY OF CHANDLER STANDARD DETAIL	**GENERAL MEDIAN DESIGN**	APPROVED: CITY ENGINEER DATE: 05-10-2018		**C-225**
PG 1 OF 2					PG 1 OF 2

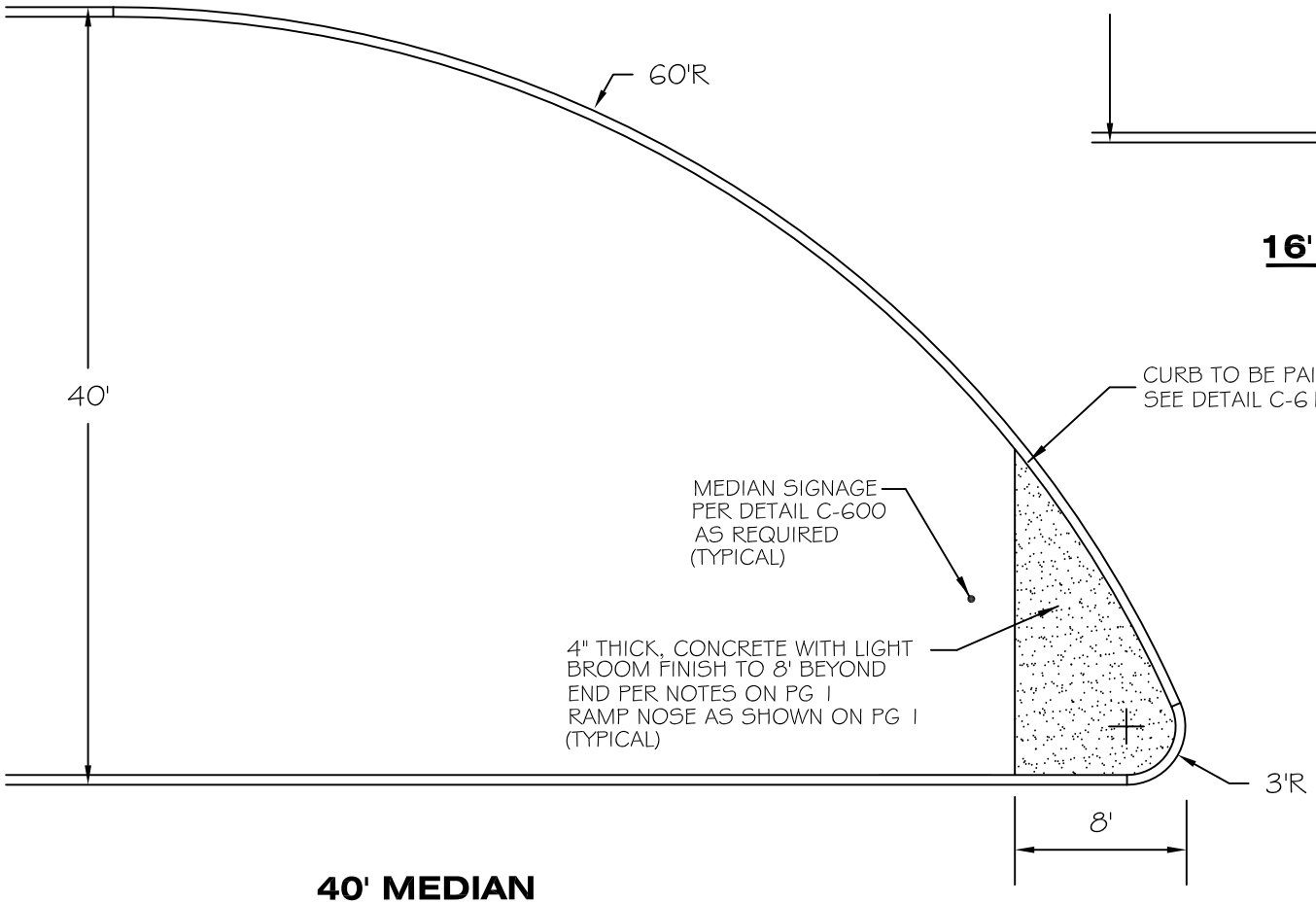

40' MEDIAN

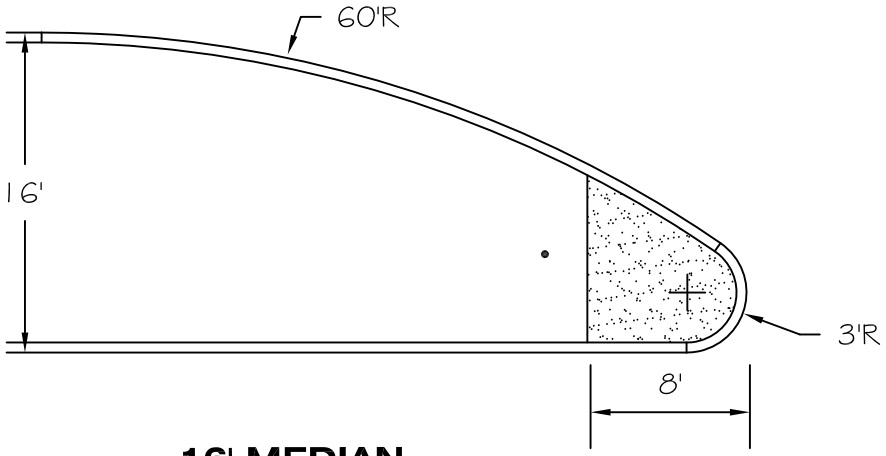

16' MEDIAN

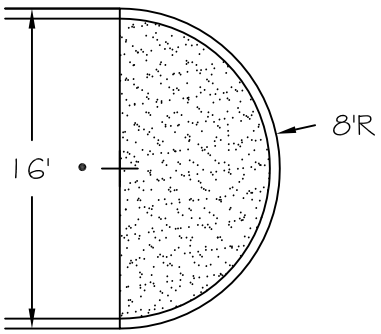

16' MEDIAN

(WITHOUT LEFT TURNS FROM CROSS-STREET)

DETAIL NO.					DETAIL NO.
C-225	CITY OF CHANDLER STANDARD DETAIL	**GENERAL MEDIAN DESIGN**	APPROVED: CITY ENGINEER		**C-225**
PG 2 OF 2			DATE: 05-10-2018		PG 2 OF 2

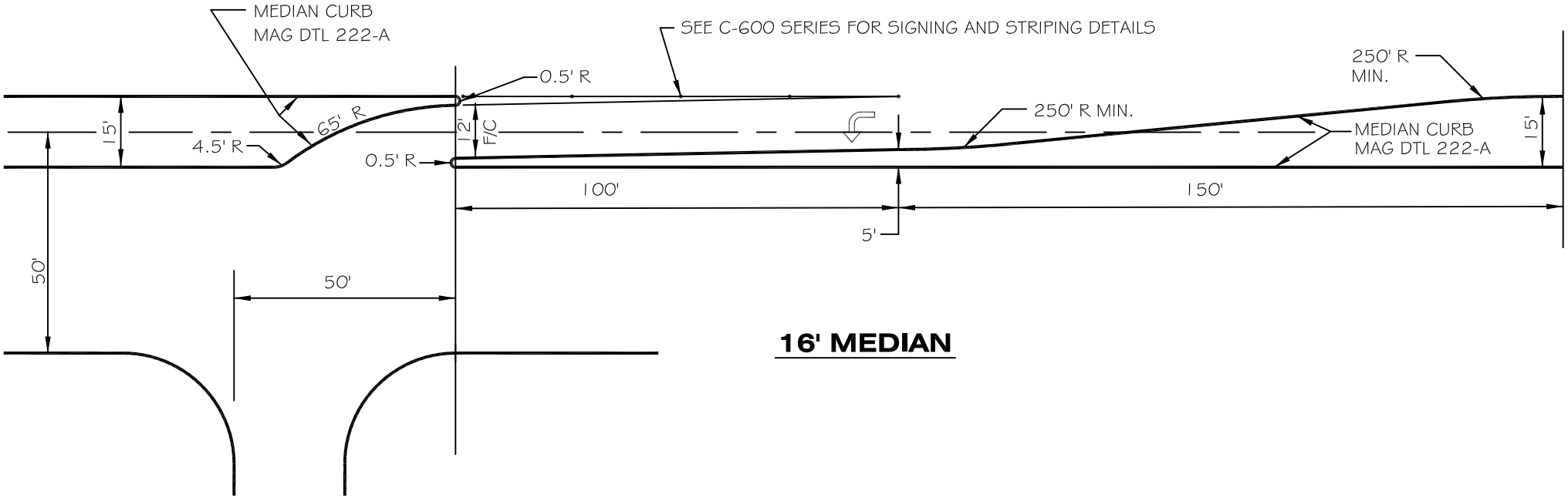

16' MEDIAN

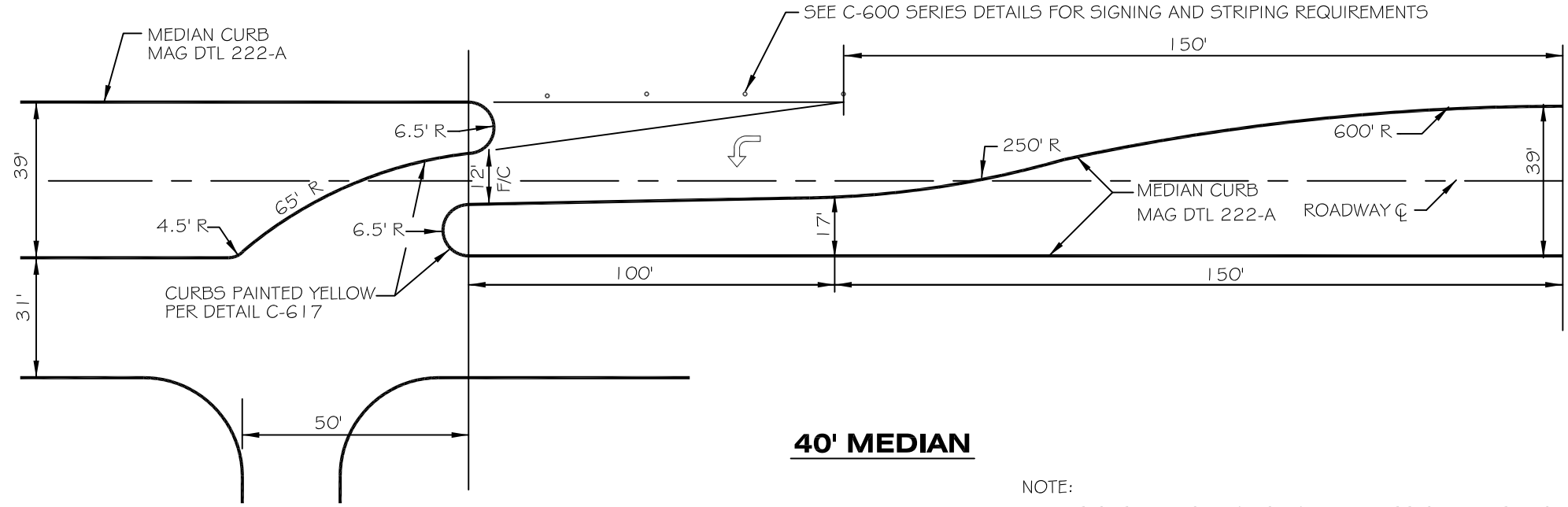

40' MEDIAN

NOTE:
DIMENSIONS ARE TO BACK-OF-CURB UNLESS OTHERWISE NOTED.

DETAIL NO.					DETAIL NO.
C-226	CITY OF CHANDLER STANDARD DETAIL	**"LEFT IN ONLY" MEDIAN DESIGNS**	APPROVED: CITY ENGINEER		**C-226**
NTS			DATE: 05-10-2018		NTS

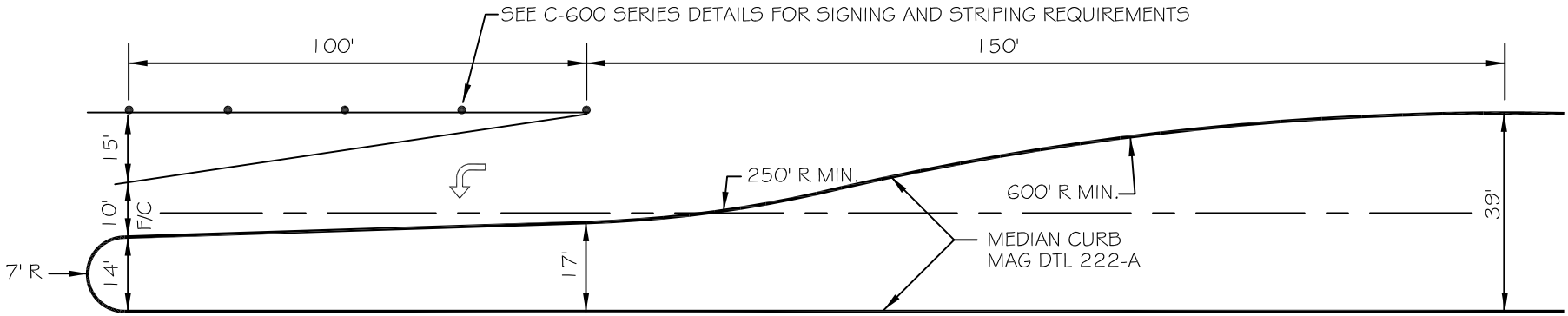

NOTE:
DIMENSIONS ARE TO BACK-OF-CURB UNLESS OTHERWISE NOTED.

DETAIL NO.					DETAIL NO.
C-227	CITY OF CHANDLER STANDARD DETAIL	**LEFT TURN BAY IN 40' MEDIAN DESIGN**	APPROVED: CITY ENGINEER		**C-227**
NTS			DATE: 05-10-2018		NTS

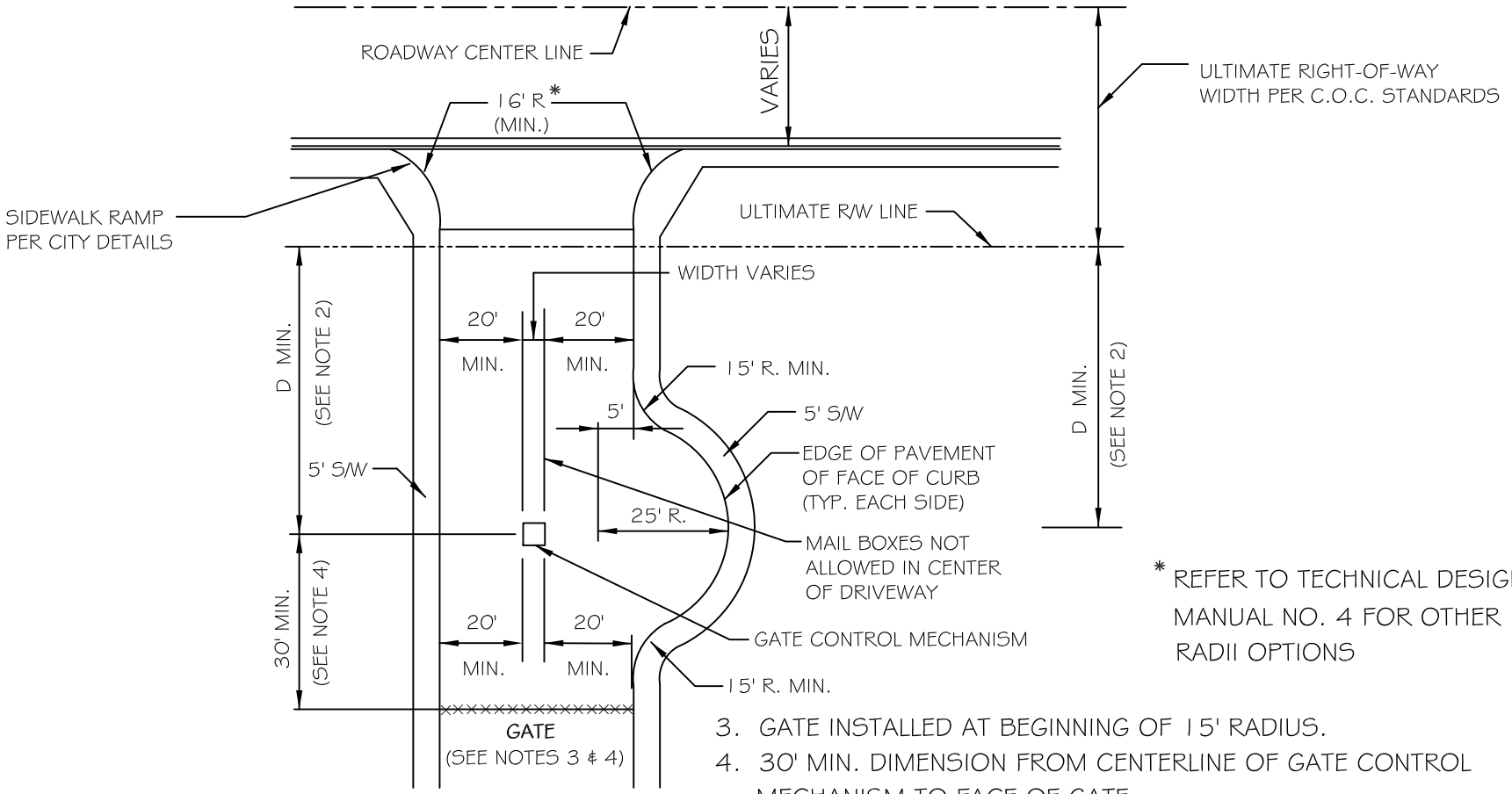

* REFER TO TECHNICAL DESIGN MANUAL NO. 4 FOR OTHER RADII OPTIONS

NOTES :

1. DRIVEWAY MAX. WIDTH = 45 FEET IN STREET R/W.
2. SETBACK REQUIREMENT BY NUMBER OF RESIDENTIAL UNITS:

NUMBER OF UNITS	D MIN.
LESS THAN 100	40'
101 TO 150	60'
151 TO 200	80'
GREATER THAN 200	100'

3. GATE INSTALLED AT BEGINNING OF 15' RADIUS.
4. 30' MIN. DIMENSION FROM CENTERLINE OF GATE CONTROL MECHANISM TO FACE OF GATE.
5. WHERE MORE THAN ONE ENTRY IS PROVIDED, $D_{MIN.}$ MAY BE REDUCED WITH APPROVAL OF CITY ENGINEER.
6. ELECTRICAL CONTROLLED GATES SHALL BE EQUIPPED WITH AN AUTOMATIC OPENING PRE-EMPTION DEVICE, TIMED TO REMAIN OPEN FOR 30 MINUTES, AND A KNOX KEY SWITCH OVERRIDE LOCATED AT THE GATE CONTROL MECHANISM. ELECTRIC GATE OPERATORS SHALL BE LISTED IN ACCORDANCE WITH UL 325. GATES SHALL BE DESIGNED AND CONSTRUCTED TO COMPLY WITH THE REQUIREMENTS OF ASTM F 2200.

DETAIL NO.					DETAIL NO.
C-228	CITY OF CHANDLER STANDARD DETAIL	**TYPICAL DRIVEWAY ACCESS TO PRIVATE GATED COMMUNITY**	APPROVED: CITY ENGINEER		**C-228**
NTS			DATE: 01-09-2020		NTS

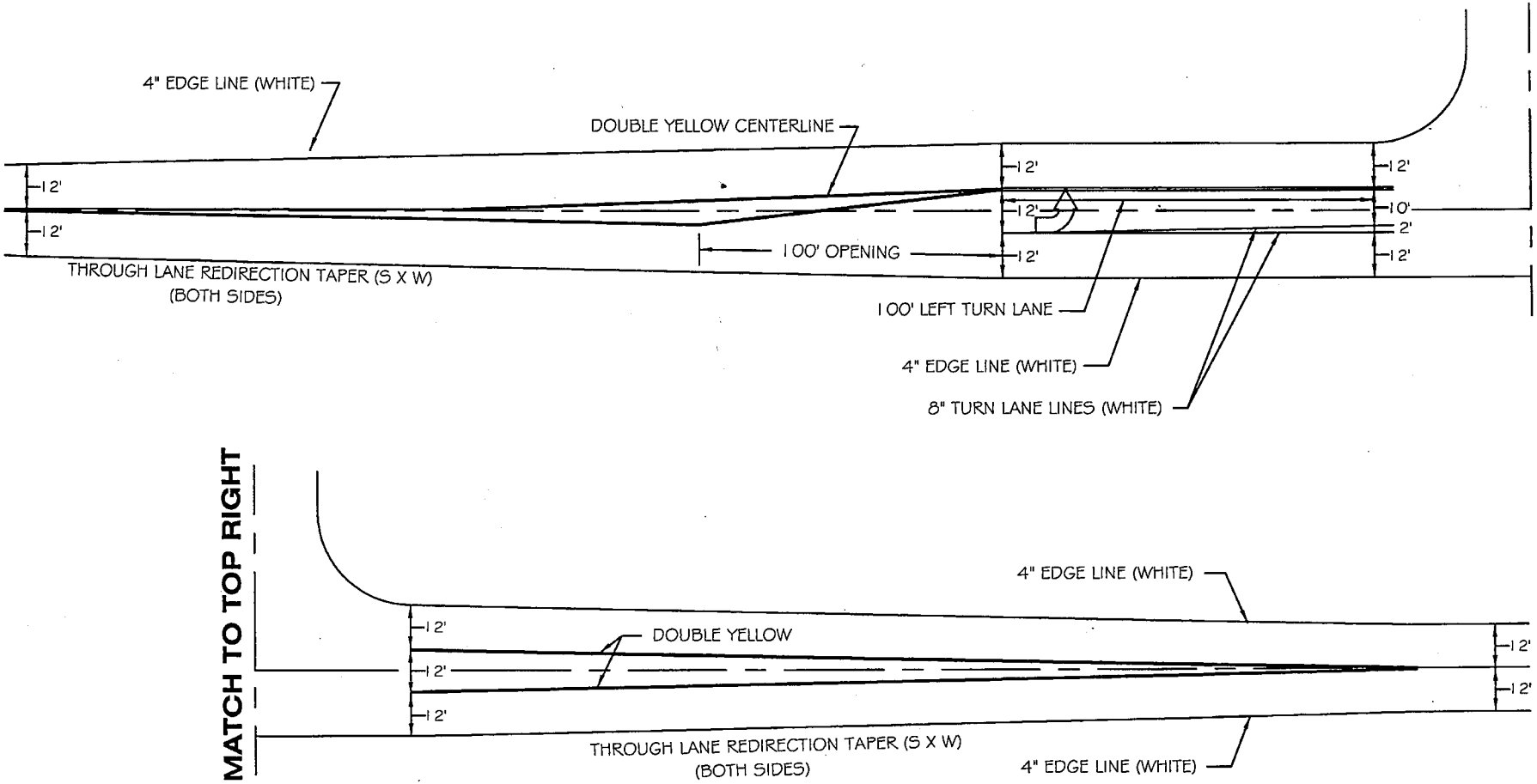

NOTE:

FOR SPEED LIMIT LESS THAN 40 M.P.H. USE 100' TURN LANE ENTRY

DETAIL NO.					
C-229 NTS	CITY OF CHANDLER STANDARD DETAIL	**LEFT TURN BAY ON TWO-LANE ROADWAY (TEMPORARY WIDENING, CROSS STREET ON ONE SIDE ONLY)**	APPROVED: CITY ENGINEER DATE: January 11, 2002	DETAIL NO. **C-229** NTS

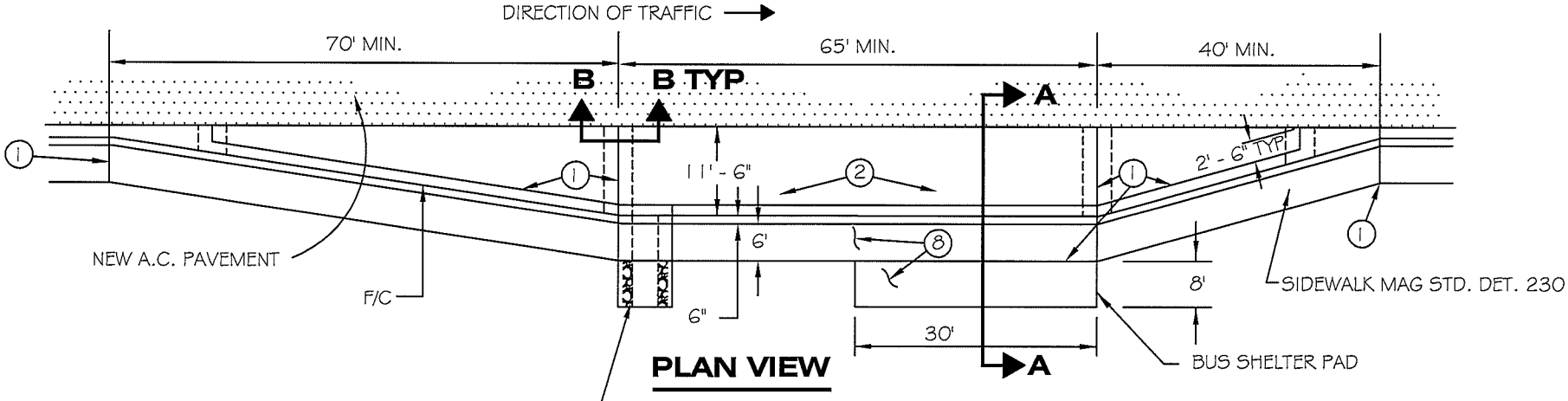

PLAN VIEW

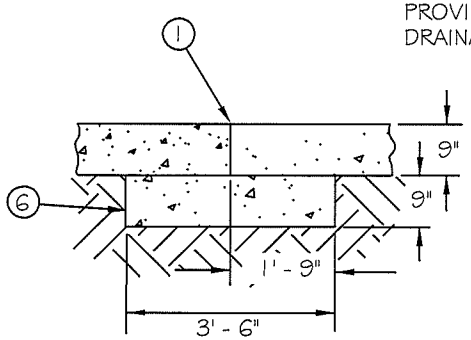

SECTION B-B

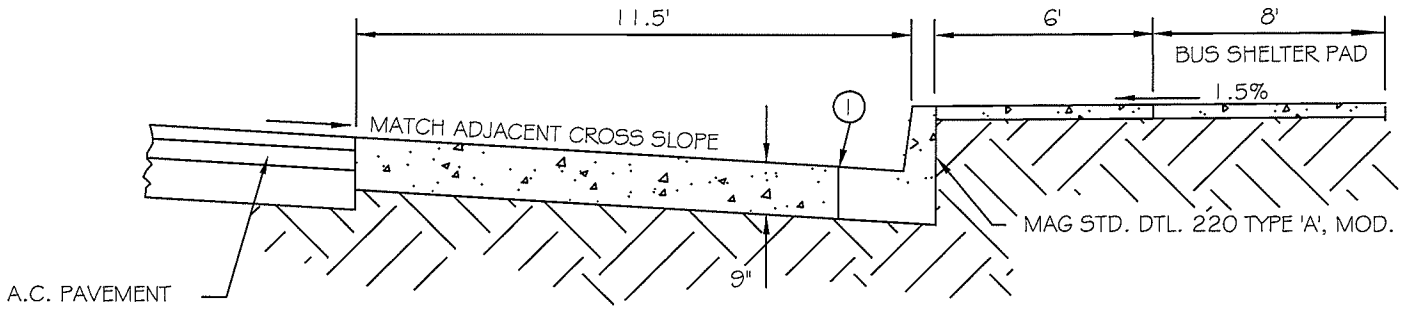

SECTION A-A

NOTES:

1. EXPANSION JOINT FILLER SHALL BE 1/2" BITUMINOUS PREFORMED EXPANSION JOINT FILLER ASTM D-1751. (FULL 8" DEPTH.)
2. CONCRETE BUS BAY SHALL BE BROOM FINISHED.
3. ALL CONCRETE SHALL CONFORM TO MAG STD. SPEC. SEC. 725. (CLASS 'A' FOR PAVEMENT.)
4. PLACE A COMBINATION CLEAR CURING COMPOUND AND WEATHER SEALER ON FINISHED SURFACE.
5. THE SUBGRADE SHALL BE PREPARED IN ACCORDANCE WITH MAG STD. SPEC. SEC. 301.
6. CONCRETE PAD SHALL BE POURED SEPARATELY FROM THE BUS BAY PAVEMENT.
7. CONTRACTION JOINTS IN THE BUS BAY SHALL MATCH THE SPACING OF THOSE IN THE CURB AND GUTTER.
8. MUST KEEP 8'x8' LANDING AREA (FROM BACK-OF-CURB) CLEAR OF OBSTRUCTIONS.

DETAIL NO.					DETAIL NO.
C-230	CITY OF CHANDLER STANDARD DETAIL	**CONCRETE BUS BAYS**	APPROVED: CITY ENGINEER		**C-230**
NTS			DATE: 1-9-14		NTS

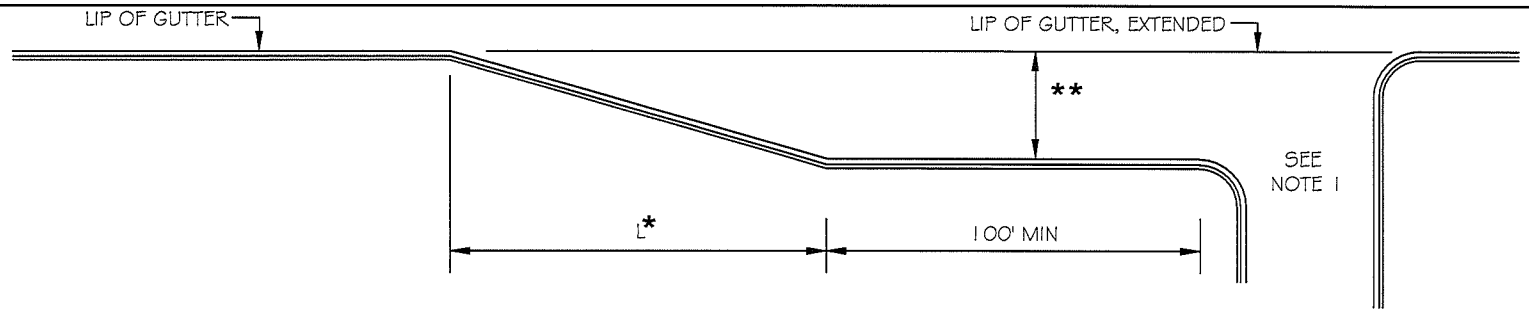

RIGHT TURN/DECELERATION LANE FOR DRIVEWAYS

* TAPER LENGTH $L = \frac{WS}{3}$, WHERE W IS TURN LANE WIDTH IN FEET AND S IS POSTED SPEED IN MPH. MINIMUM L = 100'

** 10.5' LIP TO LIP FOR ARTERIAL WITH BIKE LANE. SEE C-620 FOR STRIPING.

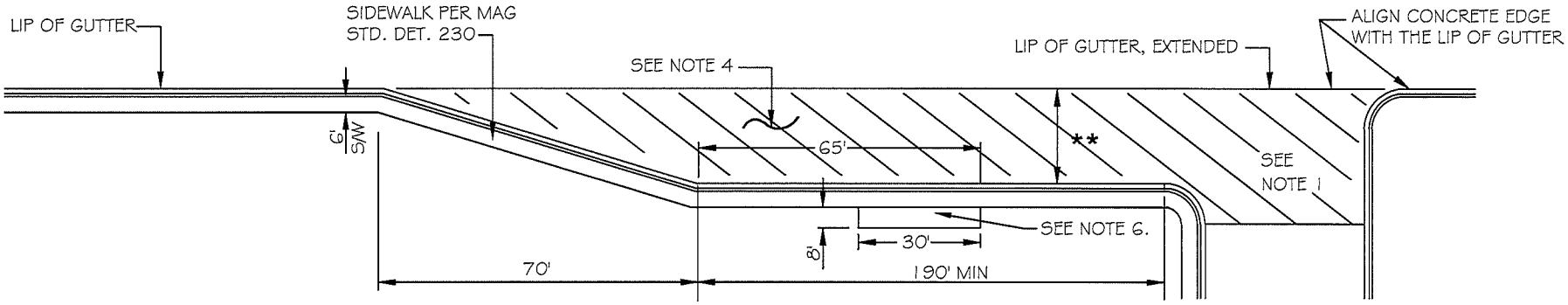

INTEGRAL BUS BAY/DECELERATION LANE

NOTES:

1. USE MAG STANDARD DETAIL 250 OR 251 FOR ENTRANCE, CURB AND SIDEWALK CONFIGURATION. RECOMMENDED DRIVEWAY DIMENSIONS ARE SPECIFIED IN TECHNICAL DESIGN MANUAL NO. 4, TABLE 7.
2. MAINTAIN NORMAL CROWN THROUGHOUT ENTIRE CROSS-SECTION. A VALLEY GUTTER IS NOT ALLOWED BETWEEN THE THROUGH LANE AND THE RIGHT TURN/DECELERATION LANE, OR IN THE BUS BAY/DECELERATION LANE.
3. THE SIDEWALK IS TO BE CONSTRUCTED ADJACENT TO THE BACK OF CURB FOR THE ENTIRE LANE LENGTH, BUS BAY/DECELERATION LANE ONLY.
4. BUS BAY / DECELERATION LANE SHALL BE CONSTRUCTED OF 9" MINIMUM CLASS 'A' CONCRETE.
5. REFER TO C-620 FOR SIGNING AND STRIPING.
6. MUST KEEP 8'x8' LANDING AREA (FROM BACK-OF-CURB) CLEAR OF OBSTRUCTIONS.

DETAIL NO.					DETAIL NO.
C-231	CITY OF CHANDLER STANDARD DETAIL	**RIGHT TURN/DECELERATION LANE FOR DRIVEWAYS**	APPROVED: CITY ENGINEER		**C-231**
NTS			DATE: 07-09-2015		NTS

R- 52' RIGHT-OF-WAY
R1 - 44' RADIUS (BACK-OF-CURB)
R2 - 26' MINIMUM RADIUS (BACK-OF-CURB)

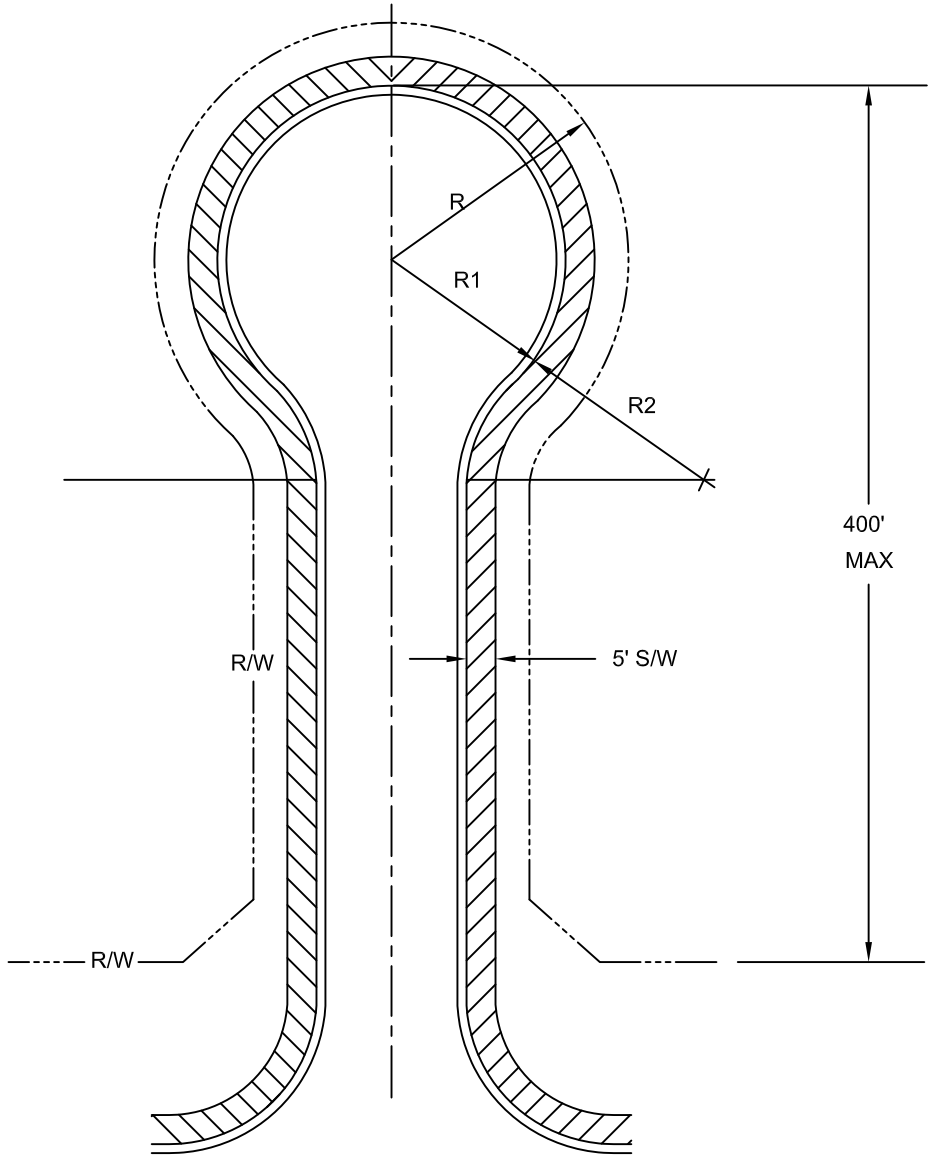

NOTE

SEE CITY OF CHANDLER STANDARD DETAIL C-213 FOR LOCAL ROAD REQUIREMENTS.

DETAIL NO.					DETAIL NO.
C-232	CITY OF CHANDLER STANDARD DETAIL	**CUL-DE-SAC**	APPROVED: CITY ENGINEER		**C-232**
NTS			DATE: 05-10-2018		NTS

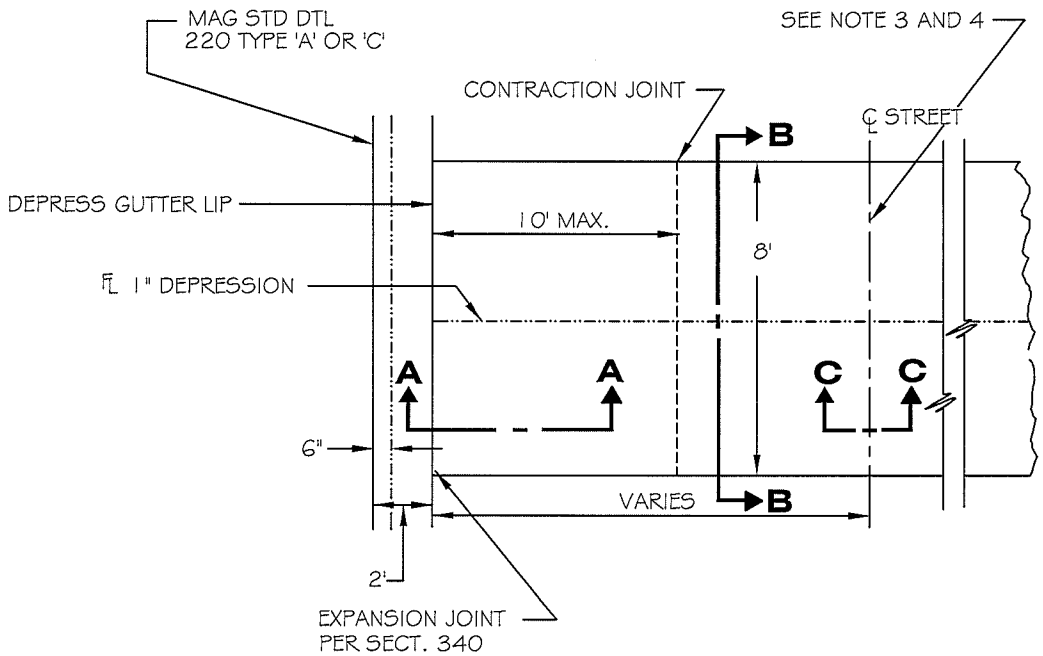

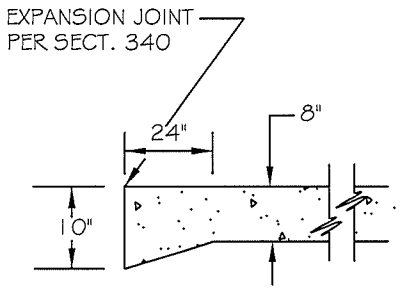

SECTION A-A

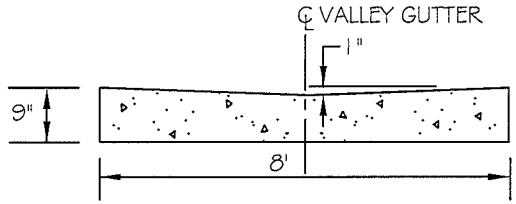

SECTION B-B

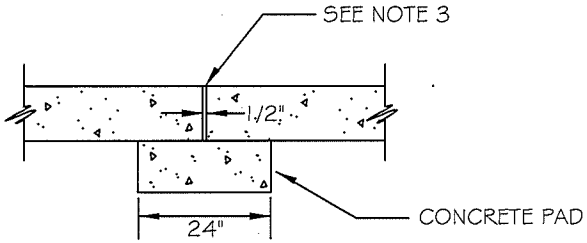

SECTION C-C

NOTES:

1. 8' MID-BLOCK VALLEY GUTTER IS TO BE USED ON LOCAL AND COLLECTOR STREETS ONLY.
2. ALL CONCRETE TO BE CLASS 'B' UNLESS OTHERWISE APPROVED. (SECT. 725)
3. EITHER CONSTRUCTION JOINT OR CONTRACTION JOINT IS REQUIRED AT CENTER LINE OF STREET.
4. A SEPARATE CONCRETE PAD IS REQUIRED AT CONSTRUCTION JOINTS PER MAG STD DTL 240, MODIFIED AS SHOWN.

DETAIL NO.					DETAIL NO.
C-233	CITY OF CHANDLER STANDARD DETAIL	**8' MID-BLOCK VALLEY GUTTER**	APPROVED: CITY ENGINEER		**C-233**
NTS			DATE: 07-09-2015		NTS

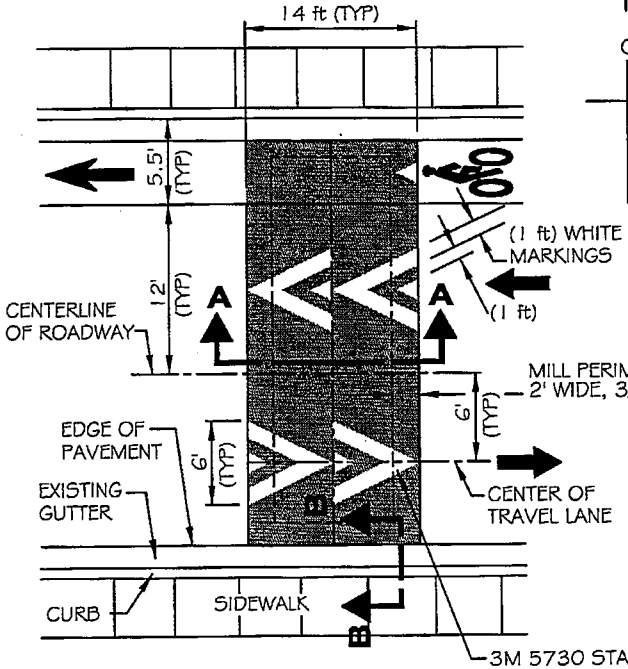

PLAN VIEW

3M 5730 STAYMARK WHITE REFLECTORIZED TAPE OR BRITE-LINE 2000 WHITE INTERSECTION PAVEMENT MARKING TAPE OR EQUAL IF APPROVED BY THE TRANSPORTATION STUDIES MANAGER.

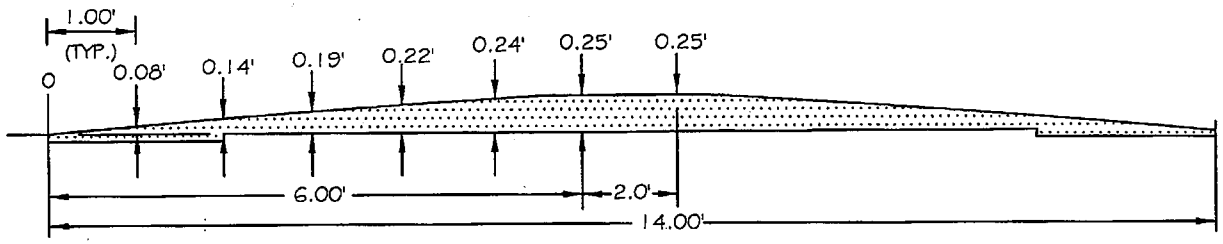

CROSS SECTION A-A

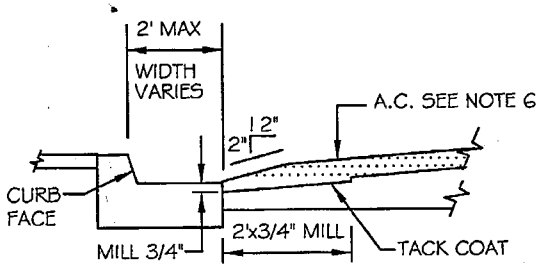

CROSS SECTION B-B

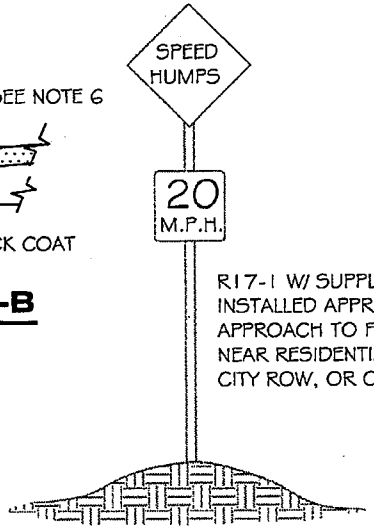

R17-1 W/ SUPPLEMENTAL PLATE TO BE INSTALLED APPROX. 150' IN ADVANCE OF APPROACH TO FIRST HUMP (TYP.), AT OR NEAR RESIDENTIAL PROPERTY LINE, WHEN CITY ROW, OR ON STREET LIGHT POLE.

NOTES:

1. HUMPS MUST BE THE FULL 0.25' FOR MAXIMUM EFFECT BUT SHALL NOT EXCEED 0.27'.
2. HUMPS CONSTRUCTED OVER 0.27' SHALL BE CORRECTED AT THE CONTRACTORS EXPENSE.
3. CROSS-SECTION ELEVATIONS SHALL HAVE A MAXIMUM TOLERANCE OF ± 0.02'.
4. SPEED HUMPS SHALL NOT BE PLACED OVER MANHOLES, WATER VALVES, JUNCTION STRUCTURES, ETC.
5. THE EXISTING ROADWAY SHALL BE MILLED TO A DEPTH OF 3/4", AROUND THE PERIMETER AS SHOWN. CROSS SECTION DIMENSIONS DO NOT INCLUDE THE 3/4" MILLING.
6. HUMP SHALL BE CONSTRUCTED WITH A12.5 MM EVAC MIX. A TACK COAT SHALL BE APPLIED PRIOR TO APPLICATION OF PAVEMENT.
7. SPEED HUMPS SHALL BE PLACED AT LOCATIONS APPROVED BY TRAFFIC ENGINEERING.
8. CONTACT TRAFFIC ENGINEERING (782-3454) ONE WEEK PRIOR TO INSTALLATION TO COORDINATE PAVEMENT MARKINGS AND SIGNING.

DETAIL NO.					DETAIL NO.
C-234	CITY OF CHANDLER STANDARD DETAIL	14' SPEED HUMP	APPROVED: CITY ENGINEER		C-234
NTS			DATE: 01/06/09		NTS

BASE THICKNESS CHART

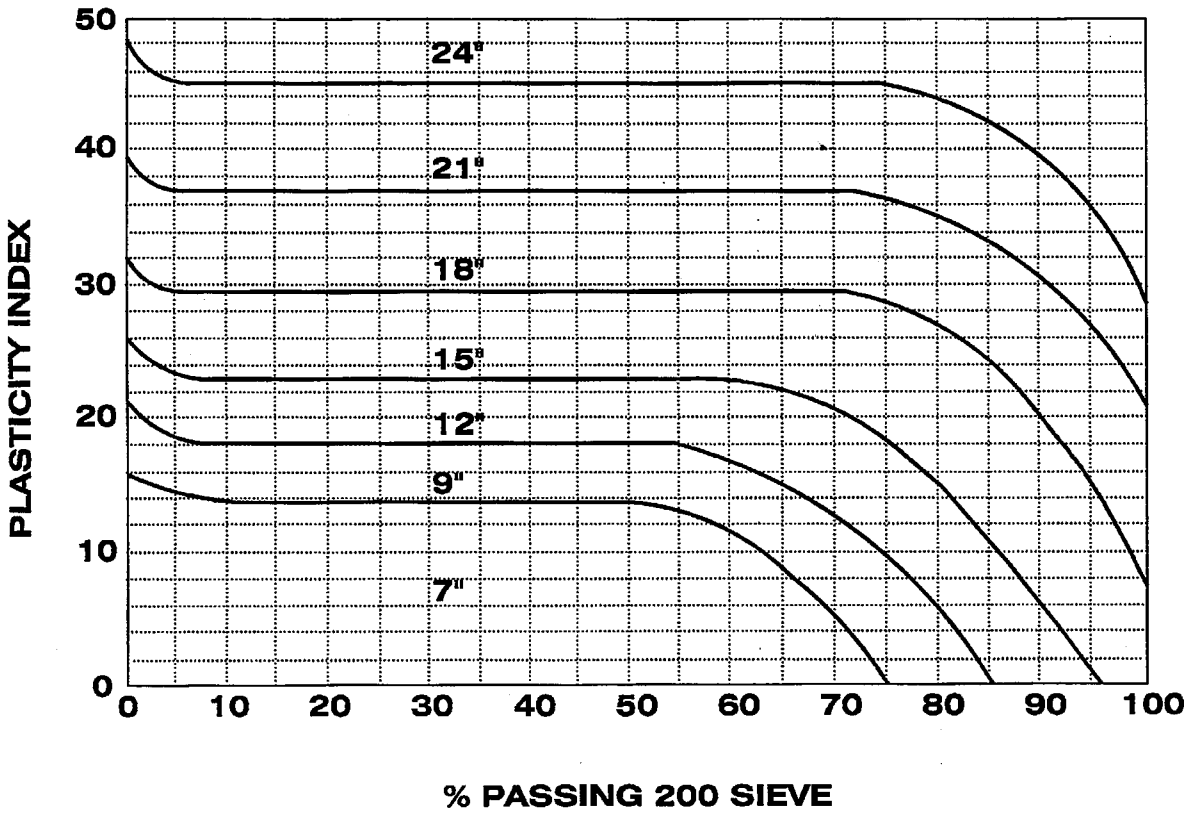

NOTES:

1. TOP 6" OF BASE SHALL BE ABC. BALANCE SHALL BE ABC OR SELECT MATERIAL.
2. MINIMUM DEPTH OF FLEXIBLE BASE COURSE REQUIRED UNDER 5" (MIN.) BIT. SURFACE.

DETAIL NO. **C-239** NTS	CITY OF CHANDLER STANDARD DETAIL	**DEPTH OF BASE COURSE MAJOR & MINOR ARTERIALS**	APPROVED: CITY ENGINEER DATE: 01/08/09	DETAIL NO. **C-239** NTS

BASE THICKNESS CHART

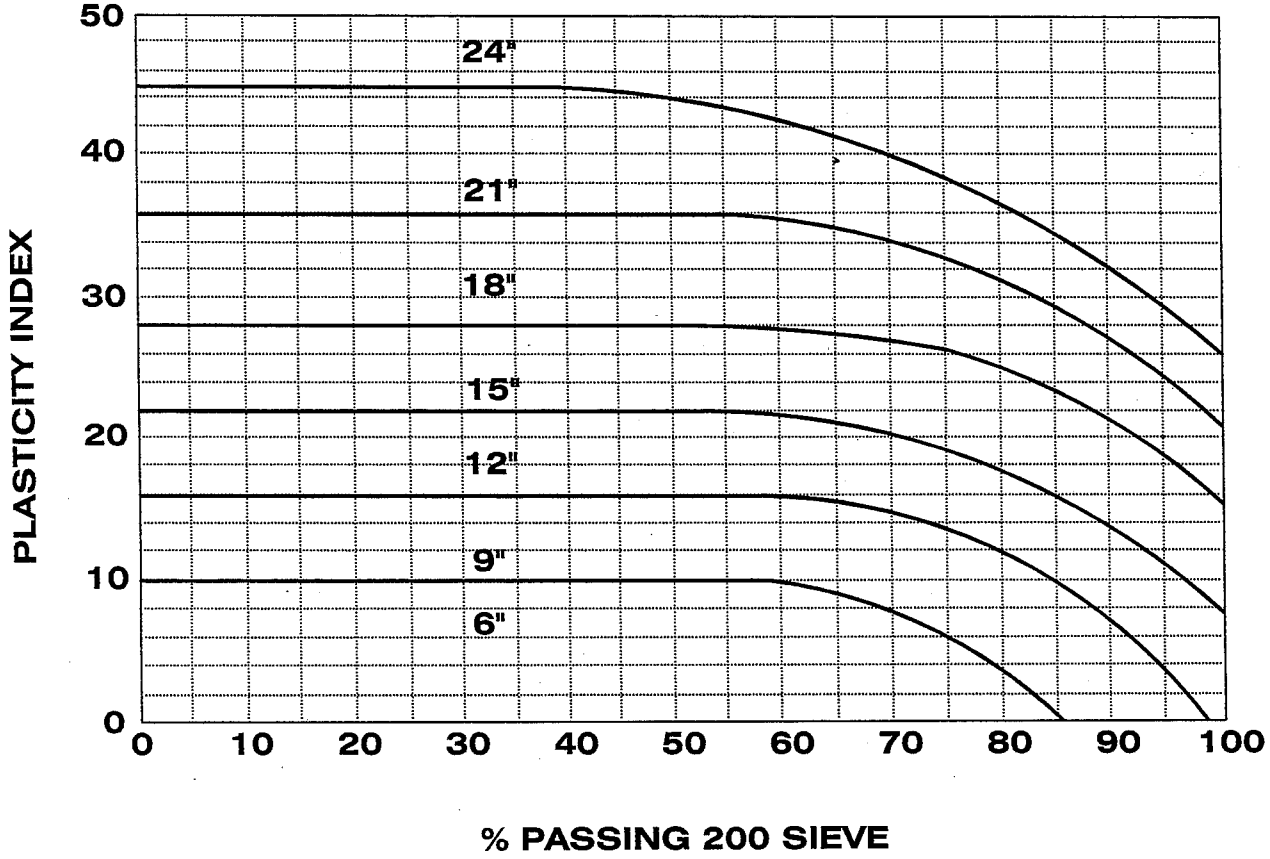

NOTES:

1. TOP 6" OF BASE SHALL BE ABC. BALANCE SHALL BE ABC OR SELECT MATERIAL.
2. MINIMUM DEPTH OF FLEXIBLE BASE COURSE REQUIRED UNDER 3" (MIN.) BIT. SURFACE.

DETAIL NO. **C-240** NTS	CITY OF CHANDLER STANDARD DETAIL	**DEPTH OF BASE COURSE NON RESIDENTIAL COLLECTOR & LOCAL STREETS**	APPROVED: CITY ENGINEER DATE: 01/14/16	DETAIL NO. **C-240** NTS

BASE THICKNESS CHART

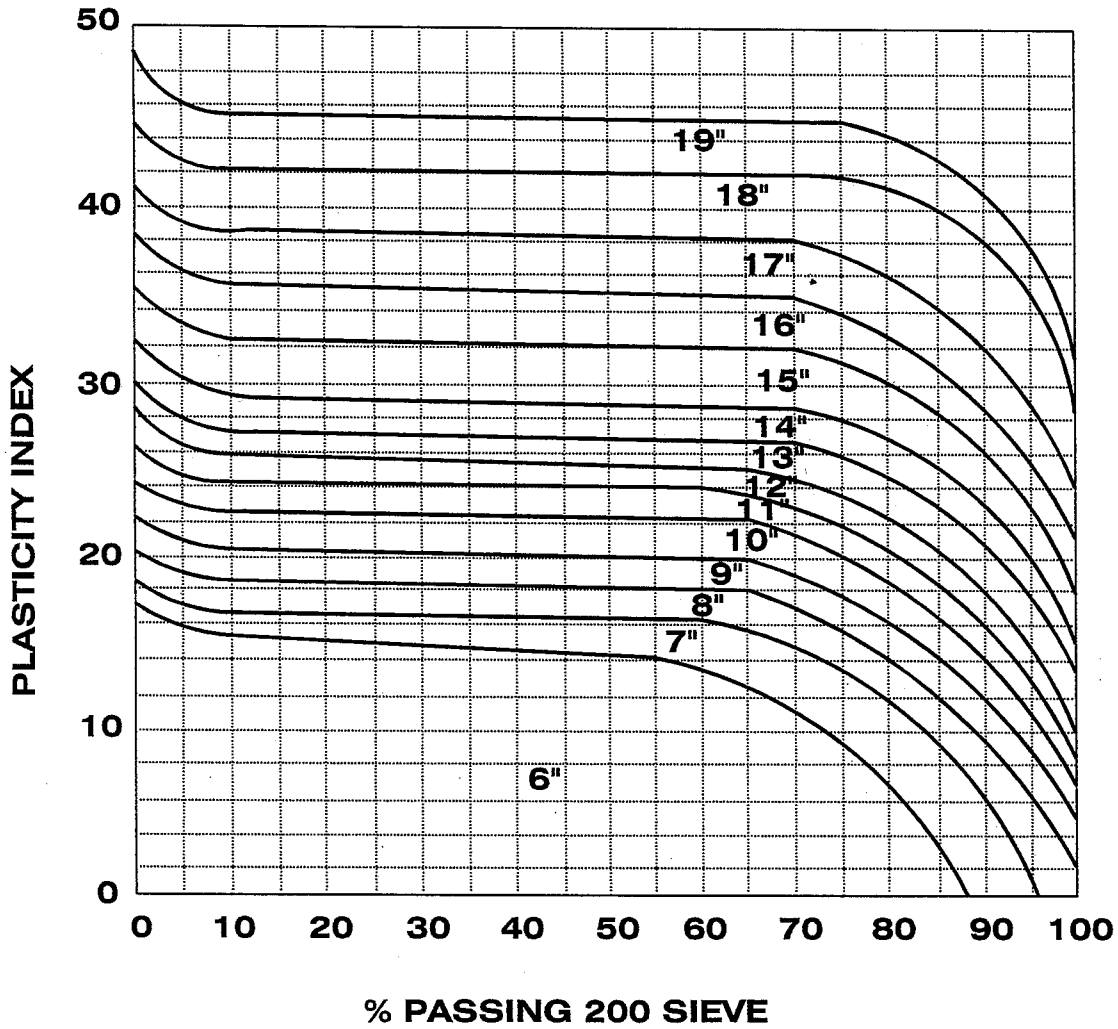

NOTES:

1. TOP 6" OF BASE SHALL BE ABC. BALANCE SHALL BE ABC OR SELECT MATERIAL.
2. MINIMUM DEPTH OF FLEXIBLE BASE COURSE REQUIRED UNDER 3" (MIN.) BIT. SURFACE.

DETAIL NO.					
C-241	CITY OF CHANDLER STANDARD DETAIL	DEPTH OF BASE COURSE COLLECTOR STREETS	APPROVED: CITY ENGINEER		DETAIL NO.
NTS			DATE: 01/14/10		C-241
					NTS

BASE THICKNESS CHART

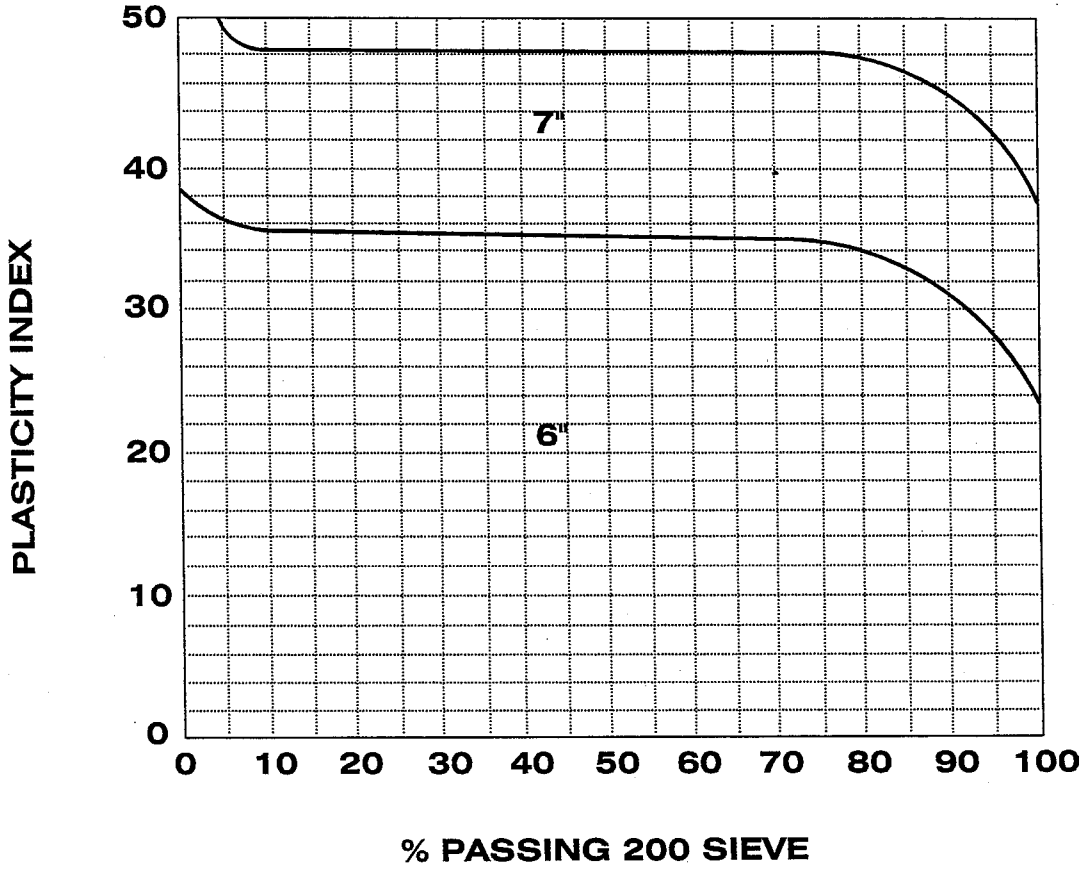

NOTE:

MINIMUM DEPTH OF FLEXIBLE BASE COURSE REQUIRED UNDER 3" (MIN.) BIT. SURFACE.

DETAIL NO. **C-242** NTS	CITY OF CHANDLER STANDARD DETAIL	**DEPTH OF BASE COURSE RESIDENTIAL LOCAL STREETS**	APPROVED: CITY ENGINEER DATE: 01/14/10	DETAIL NO. **C-242** NTS

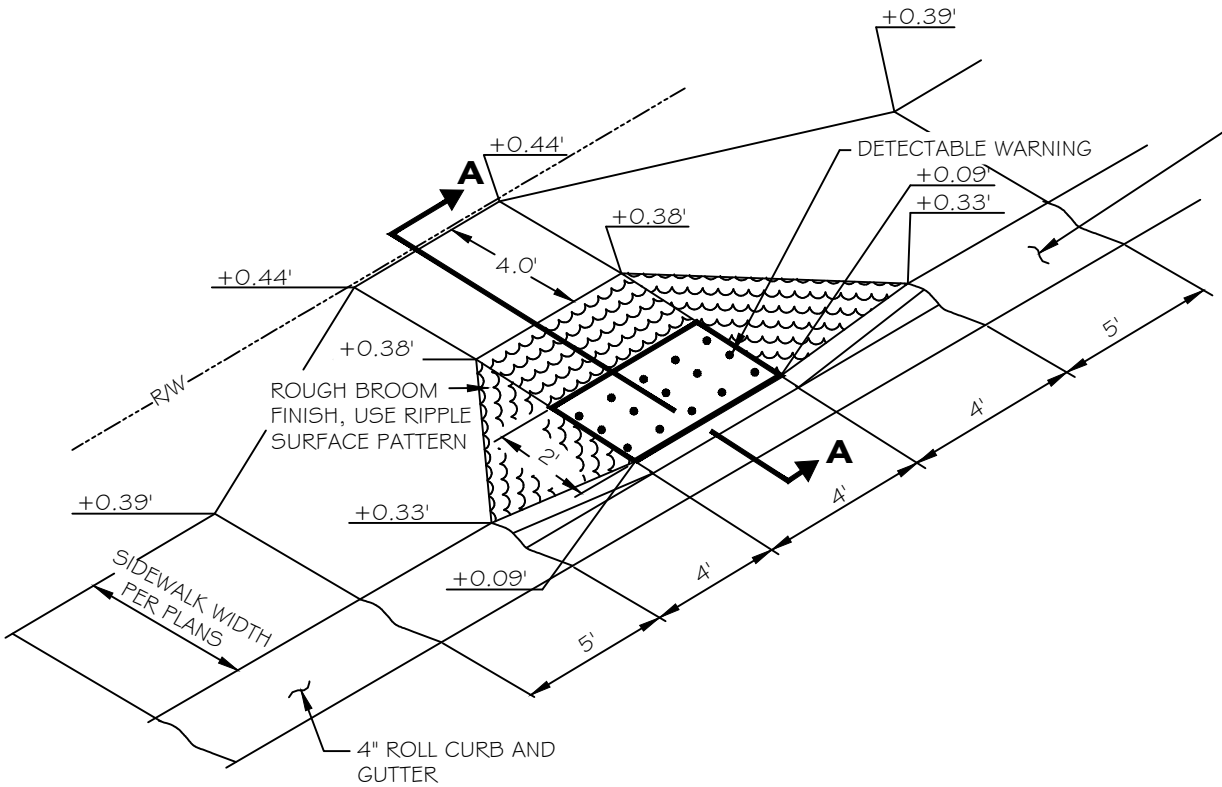

NOTES:

1. CONTROL ELEVATIONS SHOWN ARE IN RELATION TO GUTTER ℄ ELEVATION = 0.00
2. CLASS 'B' CONC. CONSTRUCTION AS PER M.A.G. STD. SPEC. 725.
3. DETECTABLE WARNING PER APPROVED PRODUCTS LIST.

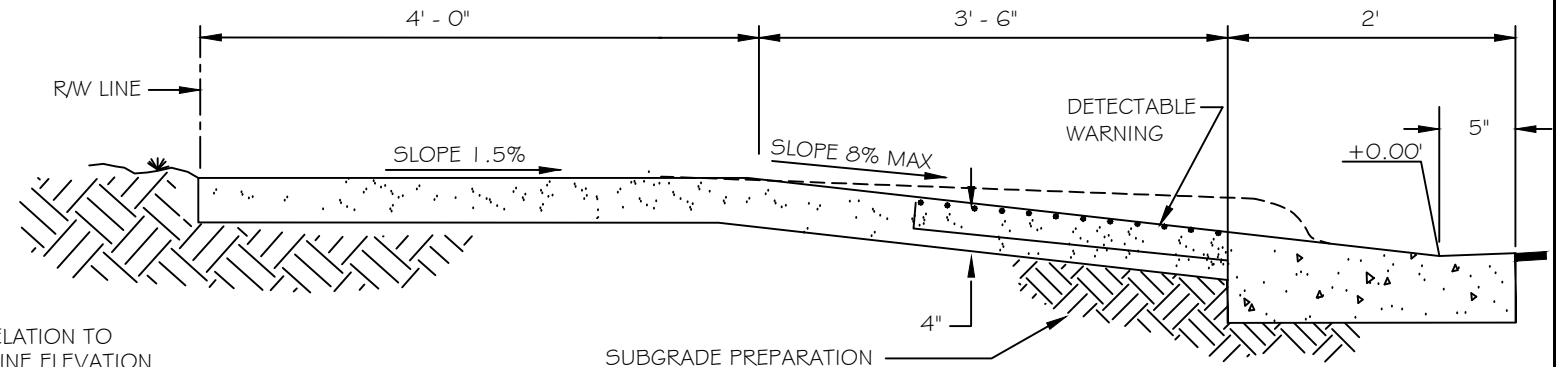

NOTE: ALL ELEVATIONS ARE IN RELATION TO ADJACENT GUTTER FLOW LINE ELEVATION.

SECTION A-A

DETAIL NO.					DETAIL NO.
C-243	CITY OF CHANDLER STANDARD DETAIL	**CURB RAMP FOR ROLL CURB**	APPROVED: CITY ENGINEER		**C-243**
NTS			DATE: 05-10-2018		NTS

NOTE:
DETECTABLE WARNING PER APPROVED PRODUCTS LIST.

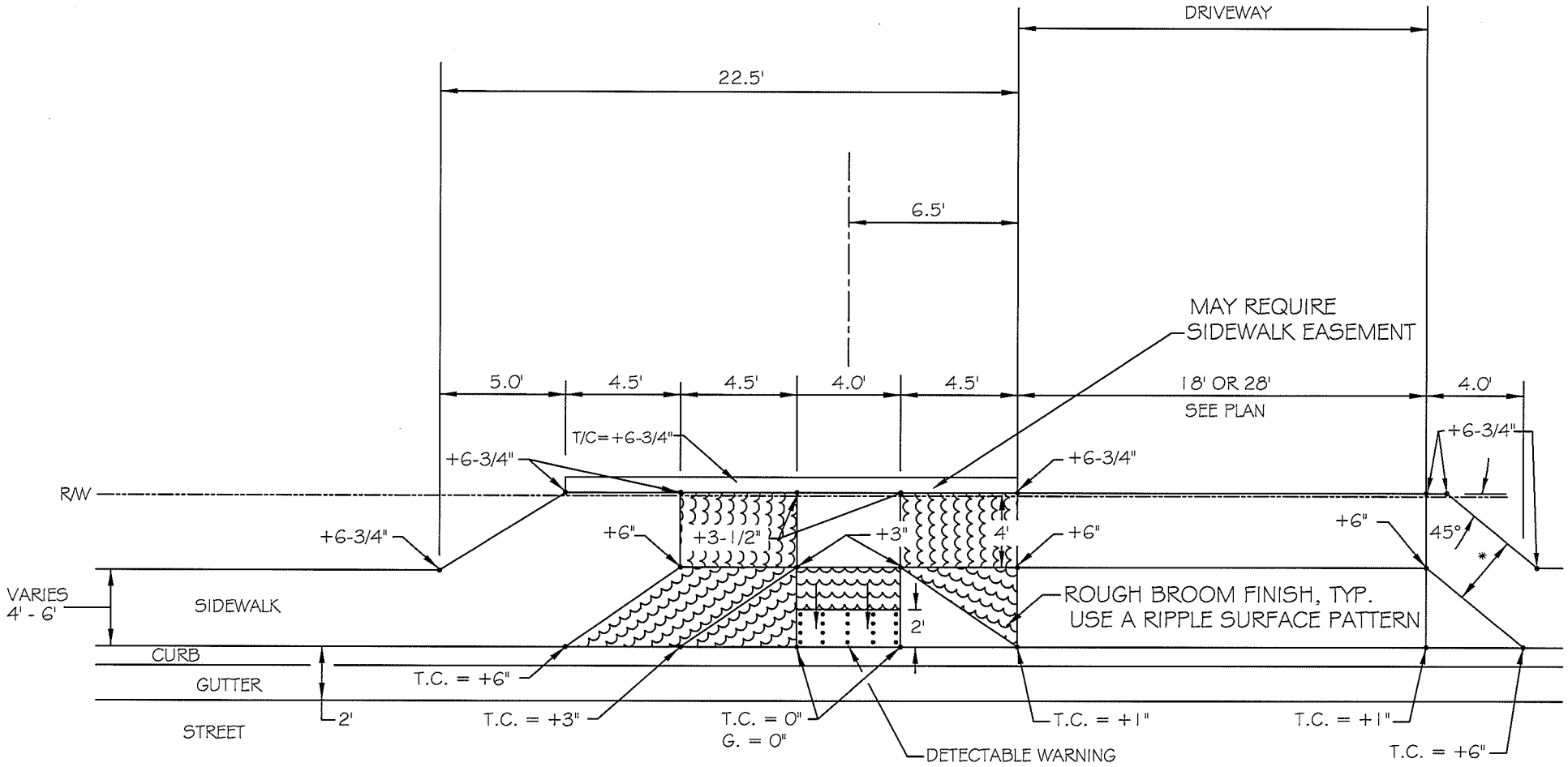

GUTTER ELEVATION = 0

CURB HEIGHT = 6"

* 4' CONSTANT WIDTH FOR 4' SIDEWALK
VARIABLE WIDTH FOR SIDEWALK GREATER THAN 4'

DETAIL NO.					DETAIL NO.
C-245	CITY OF CHANDLER STANDARD DETAIL	**COMBINED SIDEWALK RAMP AND RESIDENTIAL DRIVEWAY**	APPROVED: CITY ENGINEER		**C-245**
NTS			DATE: 1-9-14		NTS

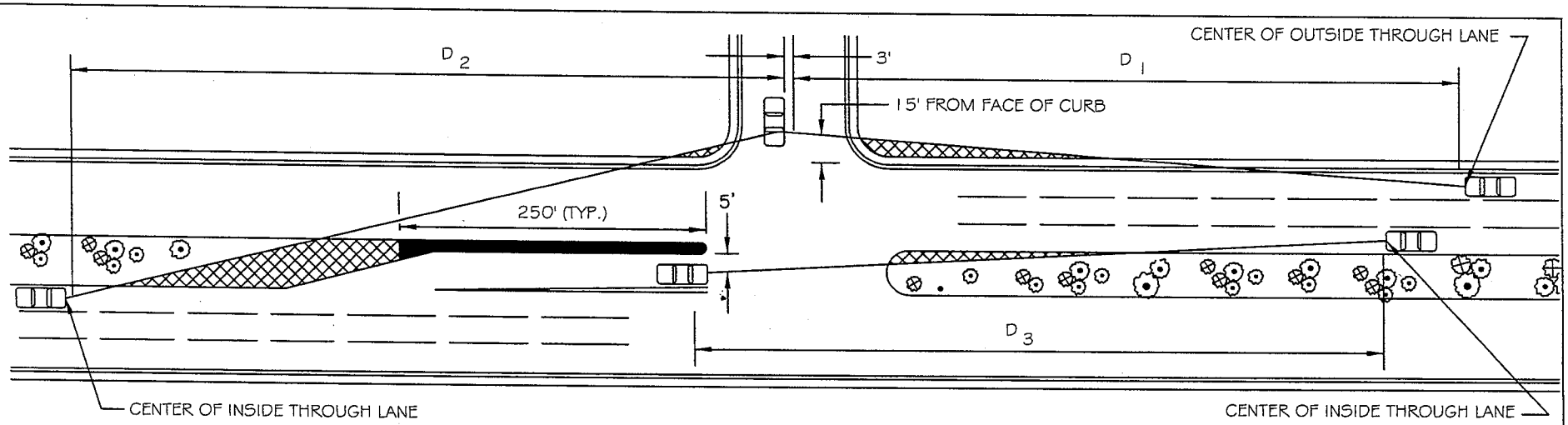

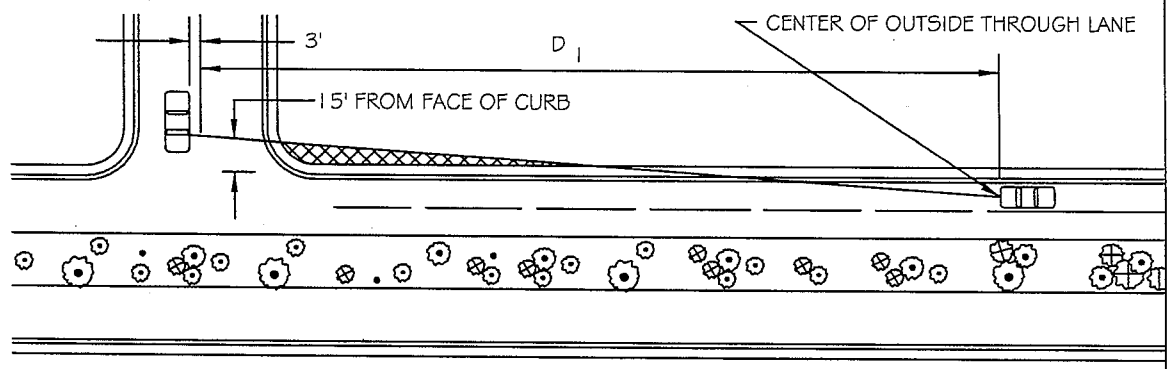

GROUND COVER, BUSHES, AND BOULDERS LESS THAN 24" (MATURE) IN HEIGHT, OR TREES TRIMMED TO 6' CLEARANCE ABOVE FINISHED GRADE ALLOWED IN THIS AREA. NO OTHER OBSTRUCTION ALLOWED UNLESS APPROVED BY THE CITY TRANSPORTATION ENGINEER.

FLUSH DECORATIVE PAVING, DECOMPOSED GRANITE, AND GROUND COVER LESS THAN 12" IN HEIGHT. ALL LANDSCAPE AND HARDSCAPE MATERIAL, AND OTHER DECORATIONS SHALL BE SUBMITTED FOR APPROVAL TO THE CITY TRANSPORTATION ENGINEER.

POSTED SPEED	RIGHT TURN ONTO THRU D_1	LEFT TURN ONTO THRU D_2	LEFT TURN FROM THRU D_3
30	310	400	290
35	360	470	340
40	410	530	380
45	460	600	430

DETAIL NO.
C-246
NTS

CITY OF CHANDLER STANDARD DETAIL

SIGHT DISTANCE FOR ARTERIAL AND COLLECTOR STREETS

APPROVED: Dean Hyl
CITY ENGINEER
DATE: 01-27-11

DETAIL NO.
C-246
NTS

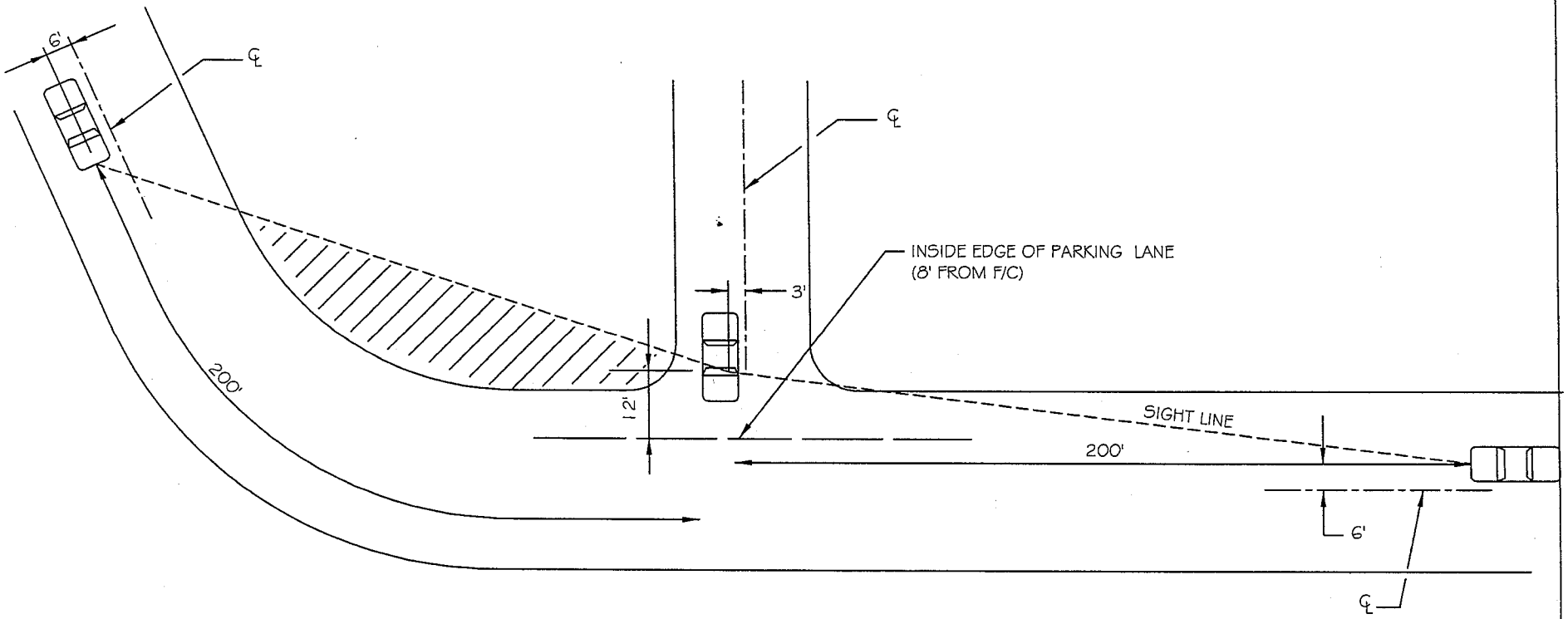

NOTE:

THIS STANDARD APPLIES ONLY TO DRIVEWAY AND CROSS-STREET ENTRIES ONTO STREETS WITH A 25 MPH SPEED LIMIT AND ON-STREET PARKING. ONCOMING VEHICLE MUST BE VISIBLE TO DRIVER OF ENTERING VEHICLE FOR AT LEAST 200 FEET FROM INTERSECTION, MEASURED ALONG PATH OF ONCOMING VEHICLE. NO GROUND COVER, SHRUBS, FLOWERS, MOUNDS, WALLS OR STRUCTURES OVER 24 INCHES IN HEIGHT ALLOWED ON STREET SIDE OF SIGHT LINE. TREES MUST BE TRIMMED TO 6 FEET ABOVE GROUND ON STREET SIDE OF SIGHT LINE.

DETAIL NO.					
C-247 NTS	CITY OF CHANDLER STANDARD DETAIL	**SIGHT DISTANCE FOR LOCAL STREETS**	APPROVED: CITY ENGINEER DATE: 01-27-11	DETAIL NO. **C-247** NTS	

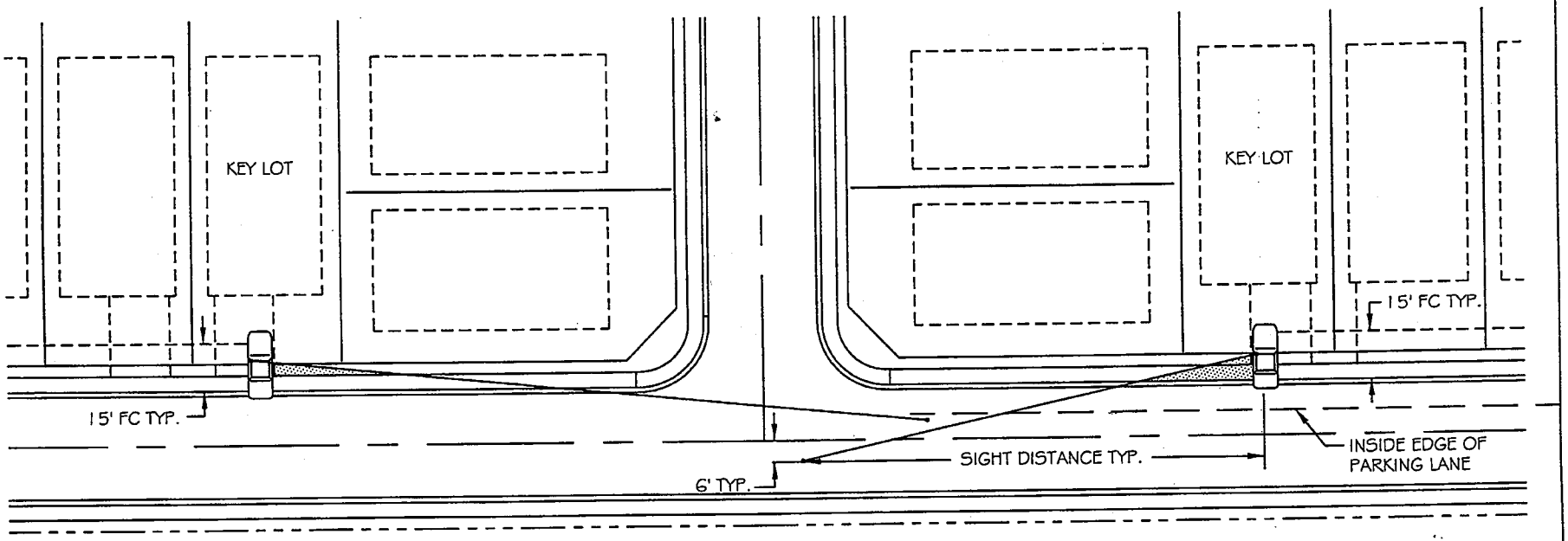

NOTES:

DRIVEWAY ON KEY LOTS NEED TO BE PLACED ON FAR SIDE OF LOT FROM REAR FENCE OF CORNER LOT.

NO STRUCTURES OR LANDSCAPING ABOVE 24" IN HEIGHT ALLOWED IN THIS AREA EXCEPT TREES WITH BRANCHES NOT LESS THAN 6' ABOVE THE GROUND.

DESIGN SPEED	SIGHT DISTANCE
25 MPH	200 FEET

DETAIL NO. C-248 NTS	CITY OF CHANDLER STANDARD DETAIL	**KEY LOT SIGHT DISTANCE**	APPROVED: CITY ENGINEER DATE: 11-19-99	DETAIL NO. C-248 NTS

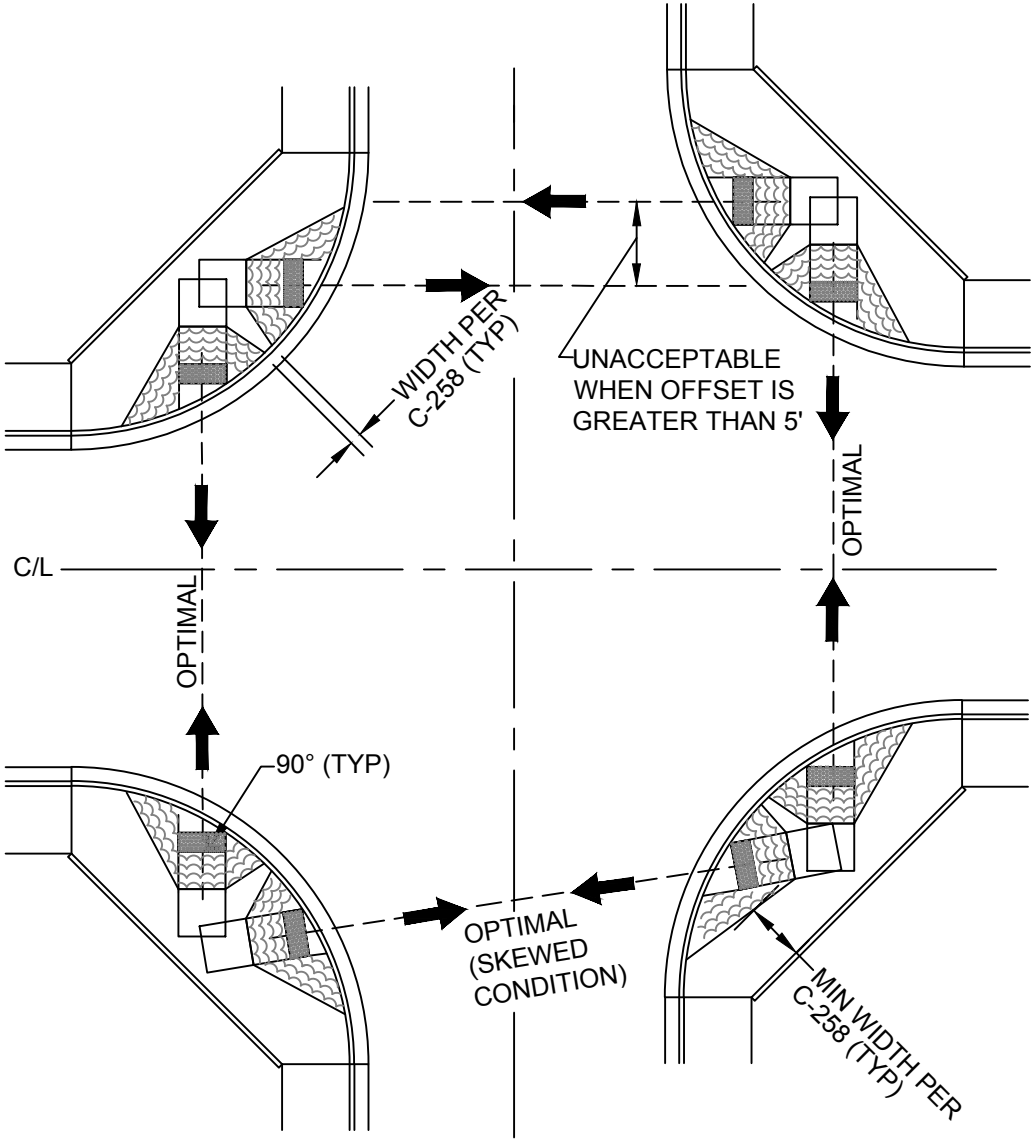

1. ALL RAMPS AND TRUNCATED DOMES SHALL BE ALIGNED SUCH THAT A LINE DRAWN PERPENDICULAR TO THE DOMES ALIGNS WITH THE CENTER OF THE OPPOSING RAMP (OPTIMAL). IN NO CASE SHALL SAID LINE BE GREATER THAN 5' FROM THE CENTER OF OPPOSING RAMP (UNACCEPTABLE).
2. PEDESTRIAN AND TRAFFIC CONTROL INCLUDING PAVEMENT MARKINGS AND SIGNAGE SHALL CONFORM TO CITY AND MUTCD REQUIREMENTS.
3. REFER TO THIS PROJECTS APPROVED PEDESTRIAN ROUTING PLAN FOR RAMP LOCATION.
4. ALL PEDESTRIAN CROSSINGS SHALL MAINTAIN A MINIMUM 4' WIDTH AND NOT EXCEED A 2% CROSS SLOPE.

DETAIL NO.					DETAIL NO.
C-249	CITY OF CHANDLER STANDARD DETAIL	**ACCESSIBLE CURB RAMP ALIGNMENT**	APPROVED: CITY ENGINEER		**C-249**
NTS			DATE: 05-10-2018		NTS

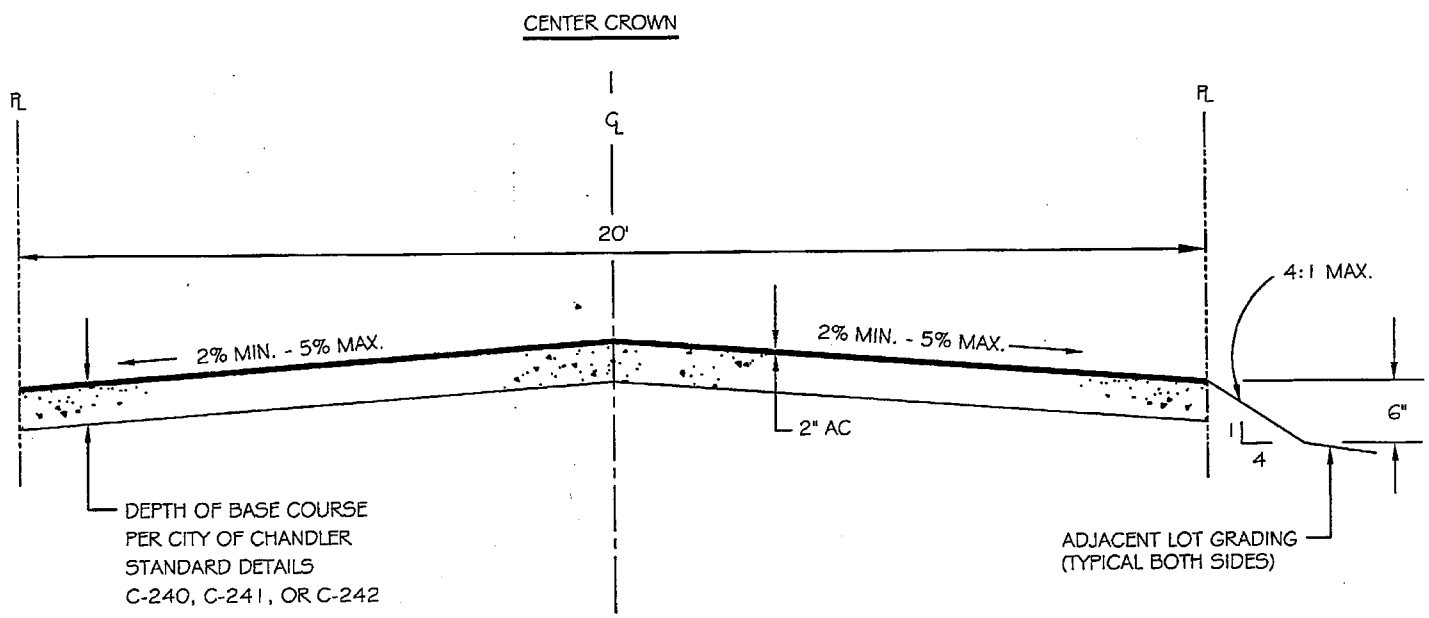

NOTES:

A. ASPHALTIC CONCRETE:
   1. MATERIAL: TYPE R19 EVAC MIX.
   2. COMPACTION TO BE TESTED IN ACCORDANCE WITH AASHTO T-99 METHOD A, AND T-191 OR ASTM D-2922 AND D-3017.
B. AGGREGATE BASE COURSE: CONFORMING TO SECTION 702.2 MAG STANDARD SPECIFICATIONS.
C. SUBGRADE PREPARATION: CONFORMING TO SECTION 301 MAG STANDARD SPECIFICATIONS

DETAIL NO.					DETAIL NO.
C-251	CITY OF CHANDLER STANDARD DETAIL	**ALLEY PAVEMENT LOT DRAINAGE FROM ALLEY**	APPROVED: CITY ENGINEER		**C-251**
NTS			DATE: 01/08/09		NTS

INVERTED CROWN

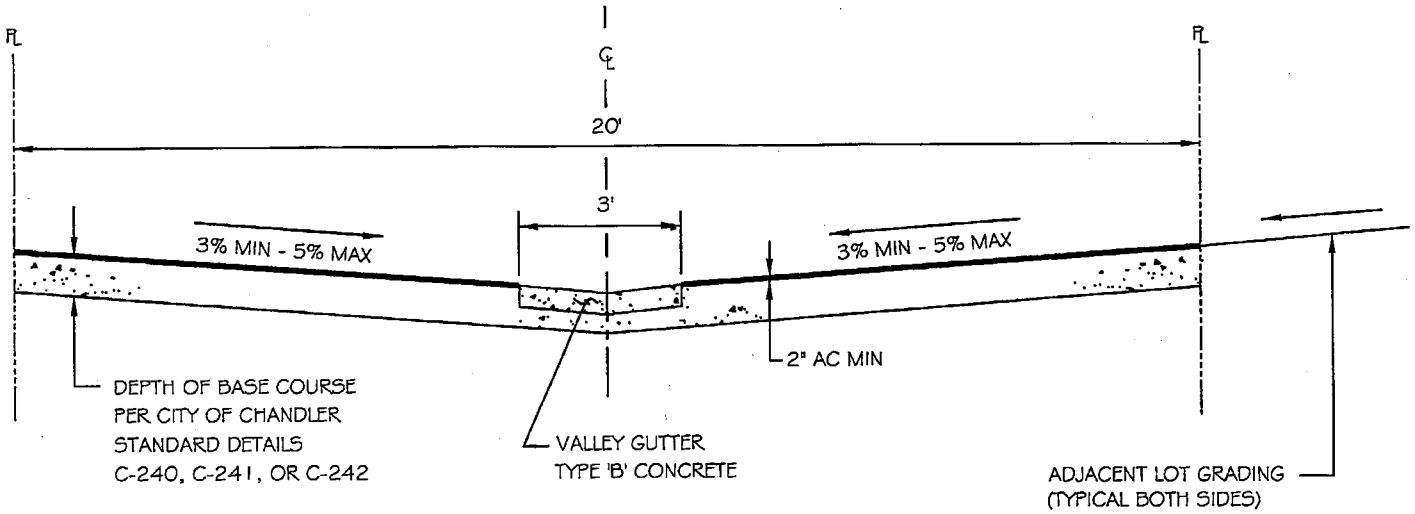

NOTES:

A. ASPHALTIC CONCRETE:
   1. MATERIAL: TYPE R19 EVAC MIX.
   2. COMPACTION TO BE TESTED IN ACCORDANCE WITH AASHTO T-99 METHOD A, AND T-191 OR ASTM D-2922 AND D-3017.

B. AGGREGATE BASE COURSE: CONFORMING TO SECTION 702.2 MAG STANDARD SPECIFICATIONS.

C. SUBGRADE PREPARATION: CONFORMING TO SECTION 301 MAG STANDARD SPECIFICATIONS

DETAIL NO.					DETAIL NO.
C-252	CITY OF CHANDLER STANDARD DETAIL	**ALLEY PAVEMENT**	APPROVED: CITY ENGINEER		**C-252**
NTS		**LOT DRAINAGE TO ALLEY**	DATE: 01/08/09		NTS

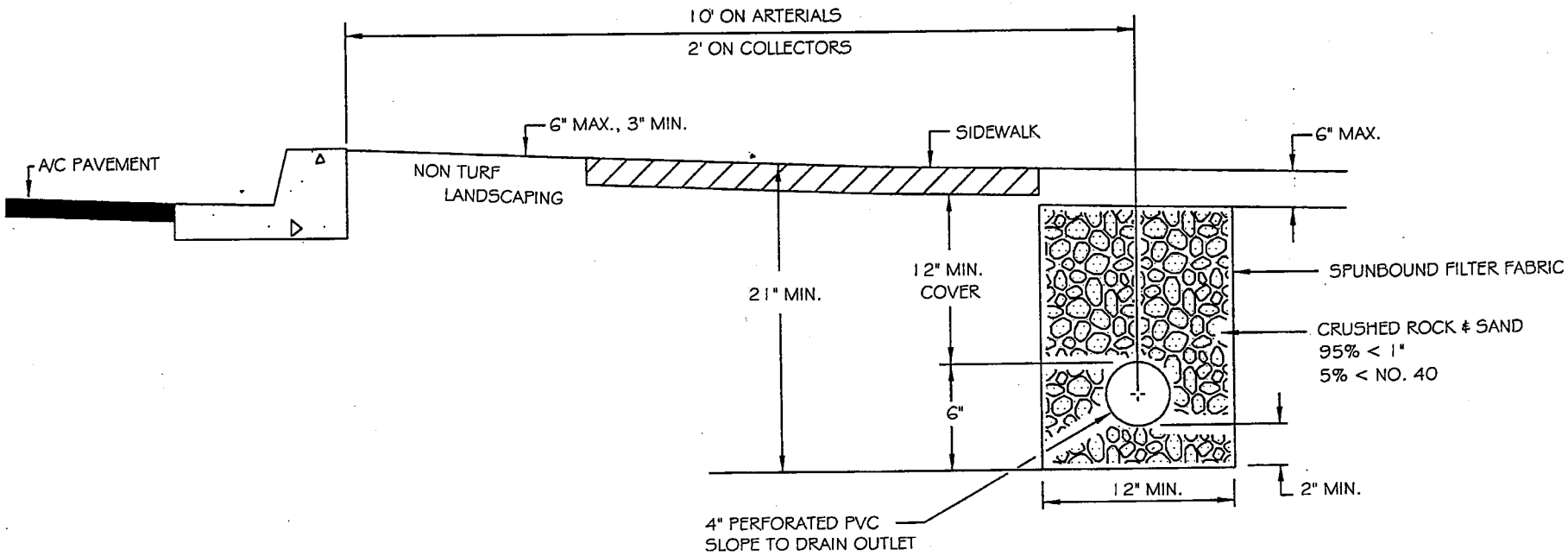

NOTES:

1. THIS DETAIL APPLIES ONLY TO AREAS THAT ARE TURF LANDSCAPED.
2. DRAIN MUST BE DESIGNED TO DISCHARGE TO RETENTION BASIN, STORM DRAIN OR DRYWELL.
3. MINIMUM SLOPE SHALL BE 0.2%.

DETAIL NO. **C-254** NTS	CITY OF CHANDLER STANDARD DETAIL	**ARTERIAL/COLLECTOR ROADWAY LANDSCAPE DRAINAGE**	APPROVED: CITY ENGINEER DATE: 11-19-99	DETAIL NO. **C-254** NTS

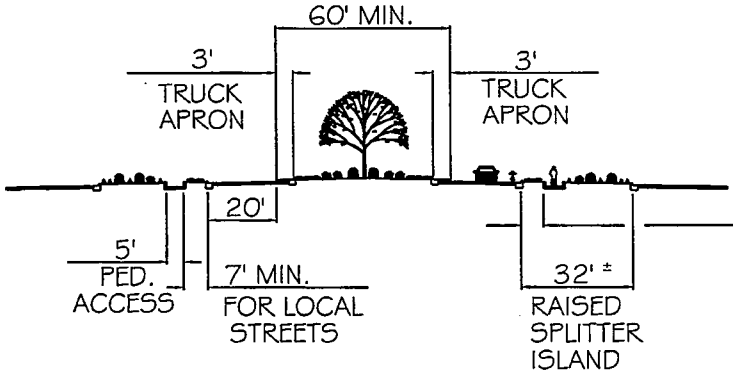

GROUND COVER, FLOWERS, AND GRANITE LESS THAN 24" (MATURE) IN HEIGHT, OR TREES TRIMMED TO 6' CLEARANCE ABOVE FINISHED GRADE ALLOWED IN THIS AREA.

SECTION AA
THROUGH SPLITTER/CENTER ISLAND

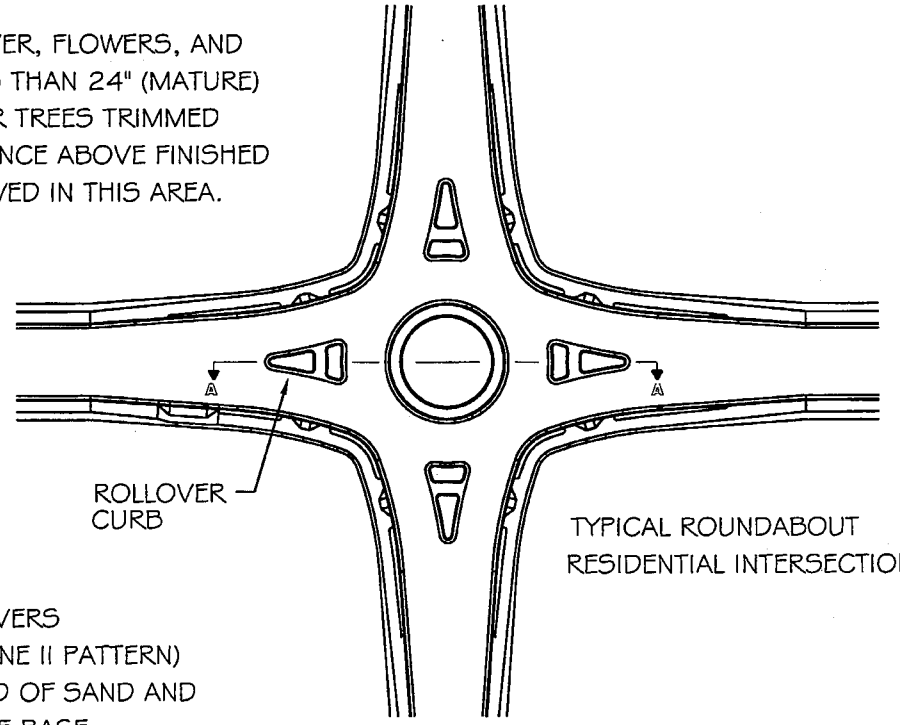

TYPICAL ROUNDABOUT
RESIDENTIAL INTERSECTION

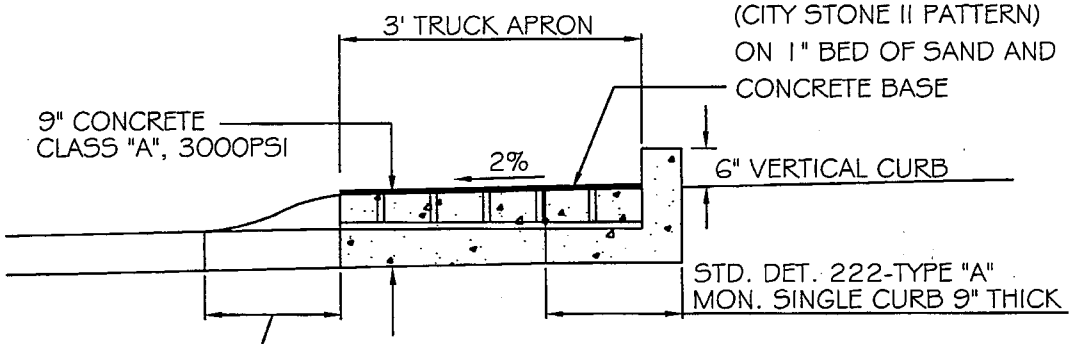

BRICK PAVERS
(CITY STONE II PATTERN)
ON 1" BED OF SAND AND
CONCRETE BASE

TRUCK APRON DETAIL

RESIDENTIAL COLLECTOR
RESIDENTIAL LOCAL
TYPICAL ROUNDABOUT
CENTER/SPLITTER ISLAND DETAIL
TRUCK APRON DETAIL

DETAIL NO.					DETAIL NO.
C-255	CITY OF CHANDLER STANDARD DETAIL	**TYPICAL ROUNDABOUT**	APPROVED: CITY ENGINEER		**C-255**
NTS			DATE: 2/26/07		NTS

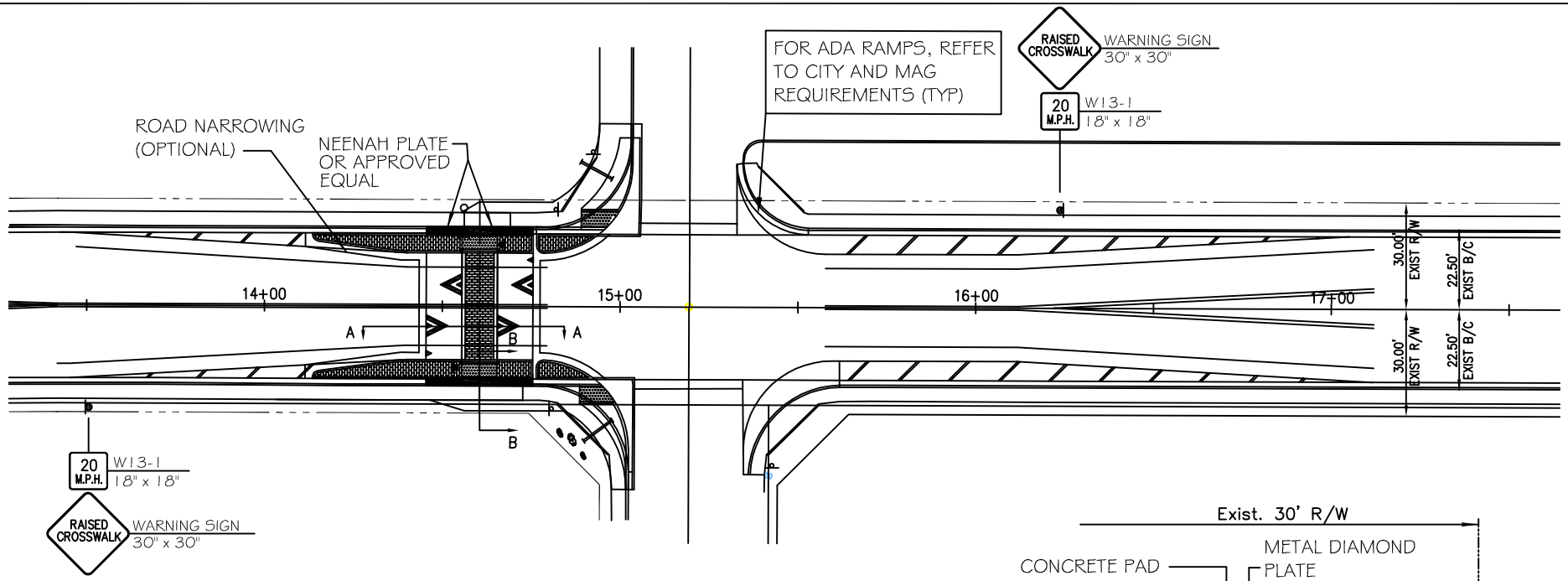

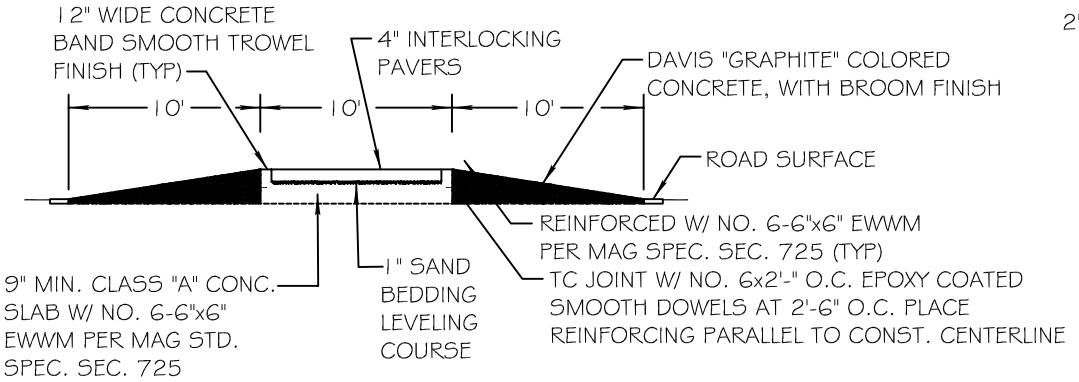

SECTION A-A
NTS

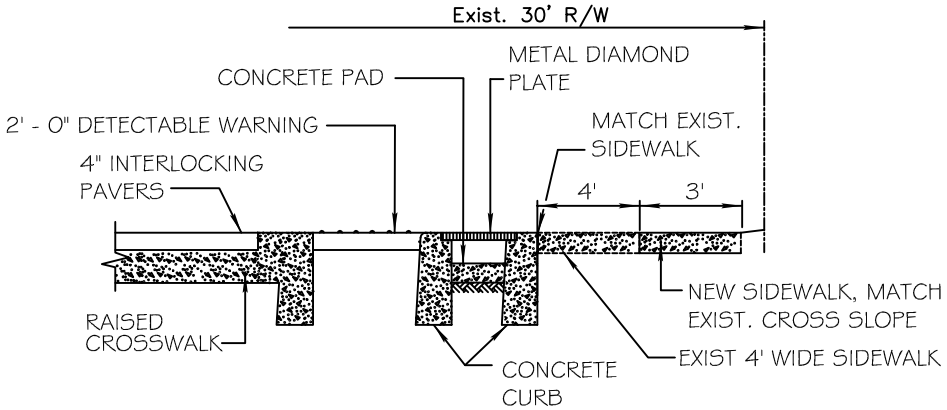

SECTION B-B
NTS

NOTES:

1. RETROFIT DESIGN SHOWN. NEW INSTALLATIONS MAY REQUIRE CURB, GUTTER, AND DRAINAGE FACILITIES TO BE DIFFERENT THAN SHOWN.
2. DETECTABLE WARNING SHALL CONSIST OF RAISED TRUNCATED DOMES MANUFACTURED BY CAST IN TAC, TEKWAY DOME TILES WITH ANCHOR SYSTEM, RAMP DOME SYSTEMS WITH METAL FRAME, ADA SOLUTIONS HEAVY DUTY COMPOSITE WET SET REPLACEABLE TILES WITH ANCHORS, OR APPROVED EQUAL. COLOR SHALL BE TERRACOTTA. INSTALLATION SHALL BE IN ACCORDANCE WITH MANUFACTURER'S RECOMMENDATIONS.

DETAIL NO.					DETAIL NO.
C-256	CITY OF CHANDLER STANDARD DETAIL	**TYPICAL RAISED CROSSWALK**	APPROVED: CITY ENGINEER		**C-256**
NTS			DATE: 3/14/2013		NTS

LEGEND:

● 8% MAXIMUM SLOPE (TYP.)

■ 1.5% MAXIMUM SLOPE (TYP.)

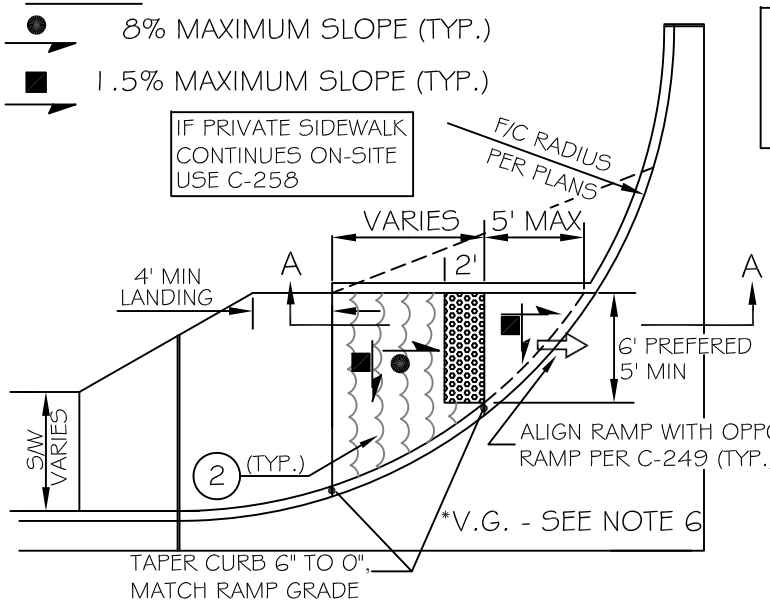

TYPICAL ARTERIAL

W/ CURB TAPER OPTION SHOWN

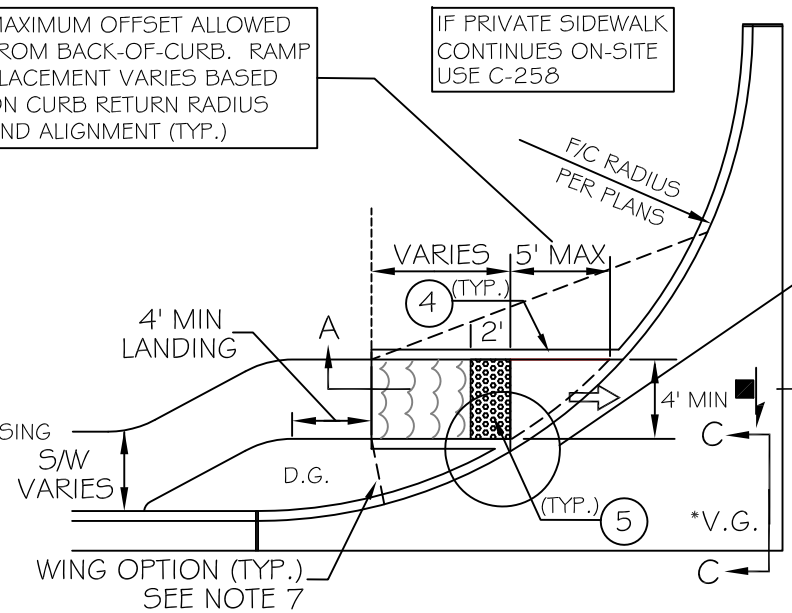

TYPICAL LOCAL/COLLECTOR

W/ DETACHED SIDEWALK OPTION SHOWN

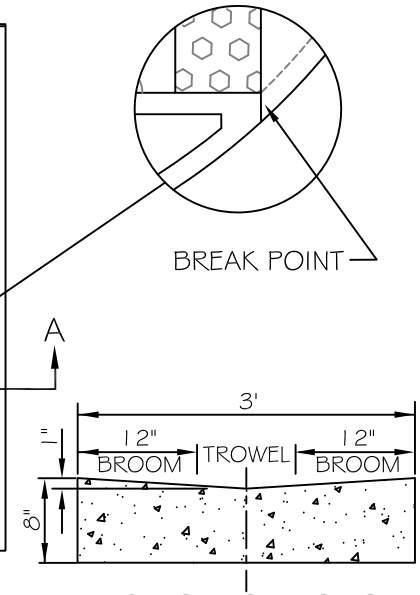

SECTION C-C

MODIFIED MAG DETAIL 240

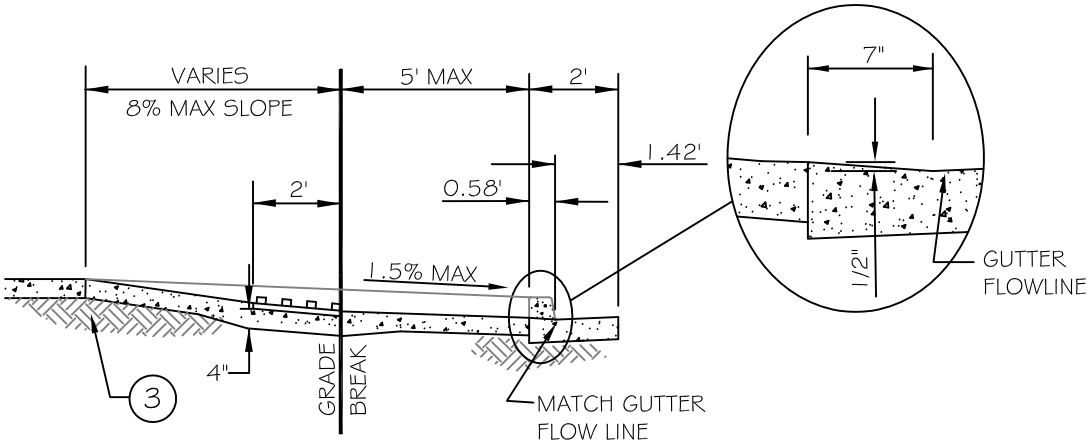

SECTION A-A

NOTES:

1. CLASS "B" CONCRETE PER MAG SECTION 725.
2. LIMITS OF HEAVY ROUGH BROOM FINISH.
3. SUBGRADE PREPARATION PER MAG SECTION 301.
4. 6" SINGLE CURB PER MAG STD. DTL. 222.
5. DETECTABLE WARNING PER APPROVED PRODUCTS LIST.
6. PEDESTRIAN CROSSING SHALL NOT OVERLAP VALLEY GUTTER (V.G.). 6' V.G. IS STANDARD, 3' V.G. IS PERMITTED AT STOP CONTROLLED DRIVEWAYS - SEE SECTION C-C.
7. WING, CURB TAPER OR SINGLE CURB MAY BE USED.

DETAIL NO.					DETAIL NO.
C-257	CITY OF CHANDLER STANDARD DETAIL	**IN-LINE RAMP DETAIL FOR RETURN TYPE DRIVEWAY**	APPROVED: CITY ENGINEER		**C-257**
NTS			DATE: 01-09-2020		NTS

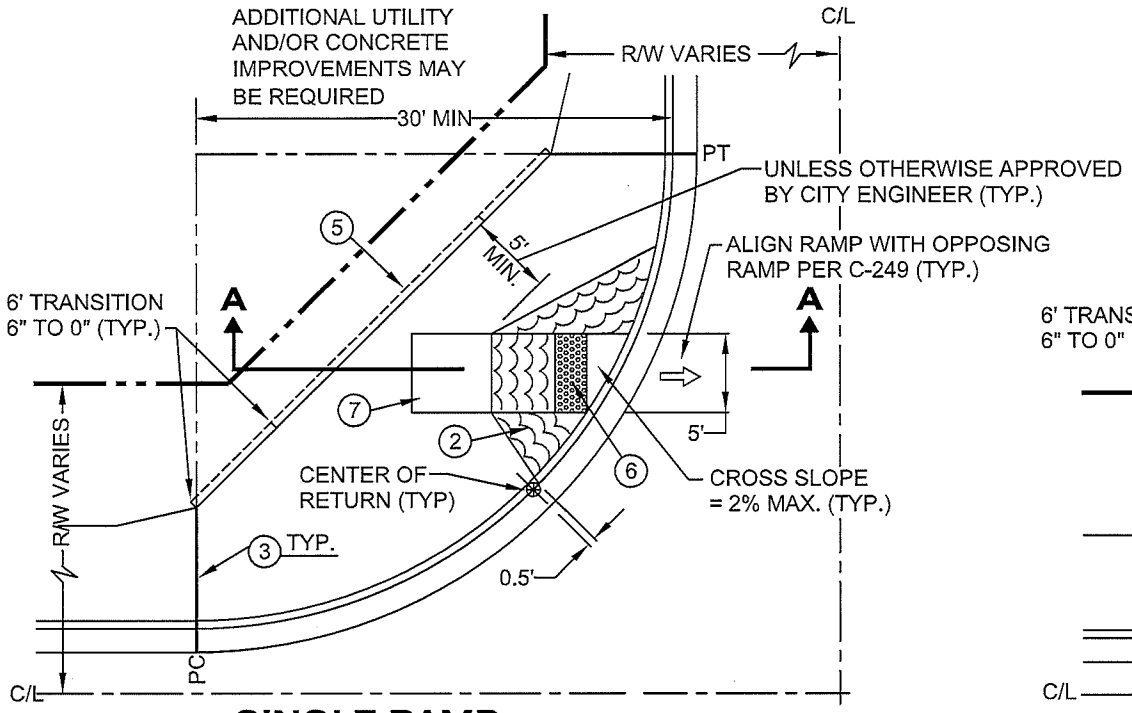

SINGLE RAMP

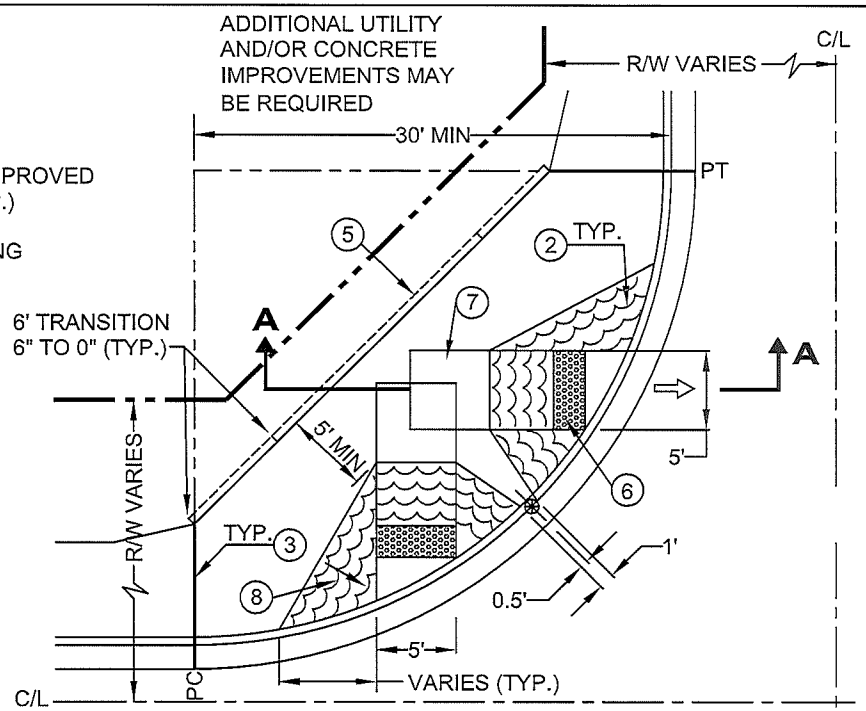

DUAL RAMP

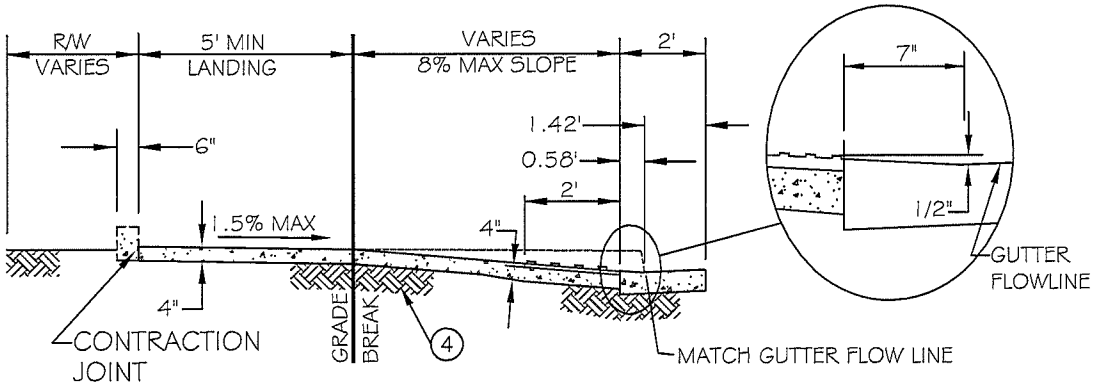

SECTION A-A

NOTES

1. CLASS "B" CONCRETE PER MAG SECTION 725.
2. LIMITS OF HEAVY ROUGH BROOM FINISH (TYP.)
3. EXPANSION JOINTS PER MAG SECTION 340.
4. SUBGRADE PREPARATION PER MAG SECTION 301.
5. OPTIONAL 6" CURB WITH 3' MIN. TRANSITION AS SHOWN, UNLESS OTHERWISE DIRECTED.
6. 2'x5' DETECTABLE WARNING PER APPROVED PRODUCTS LIST.
7. MUST MAINTAIN A 5'x5' LANDING PAD (TYP.)
8. 10% MAXIMUM WING SLOPE, ADJUST WING LENGTH AS NECESSARY (TYP.)

DETAIL NO.					DETAIL NO.
C-258	CITY OF CHANDLER STANDARD DETAIL	DIRECTIONAL CURB RAMP ARTERIAL STREETS	APPROVED: CITY ENGINEER		C-258
PAGE 1 OF 3			DATE: 07-09-2015		PAGE 1 OF 3

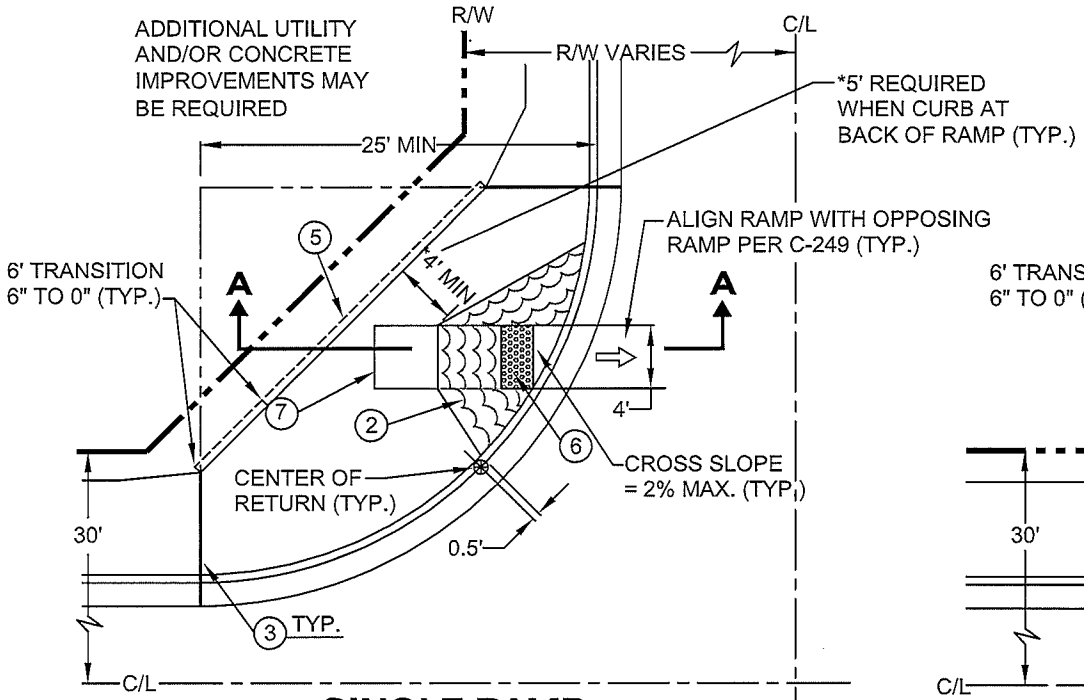

SINGLE RAMP

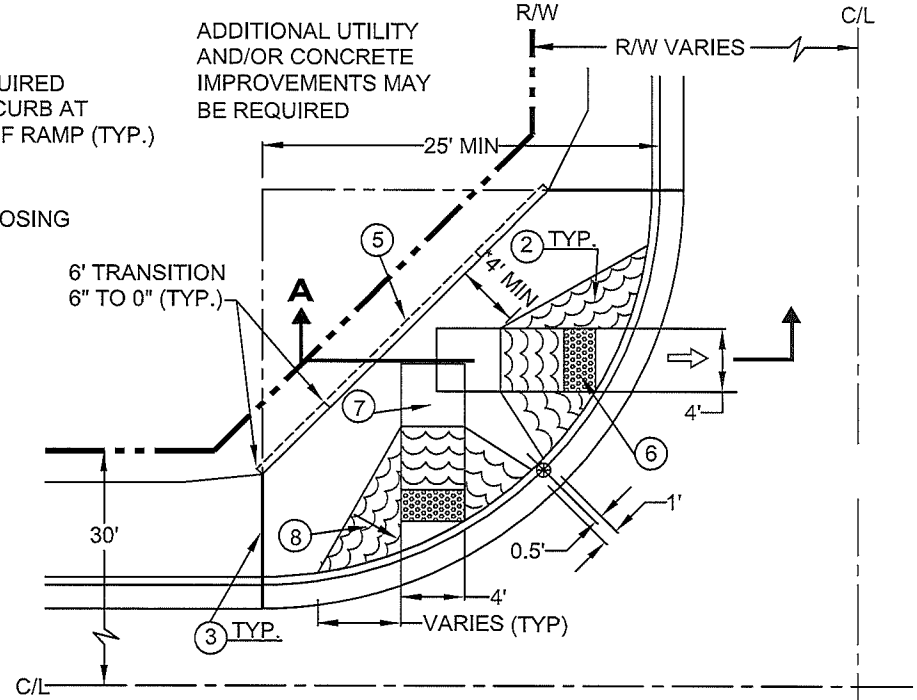

DUAL RAMP

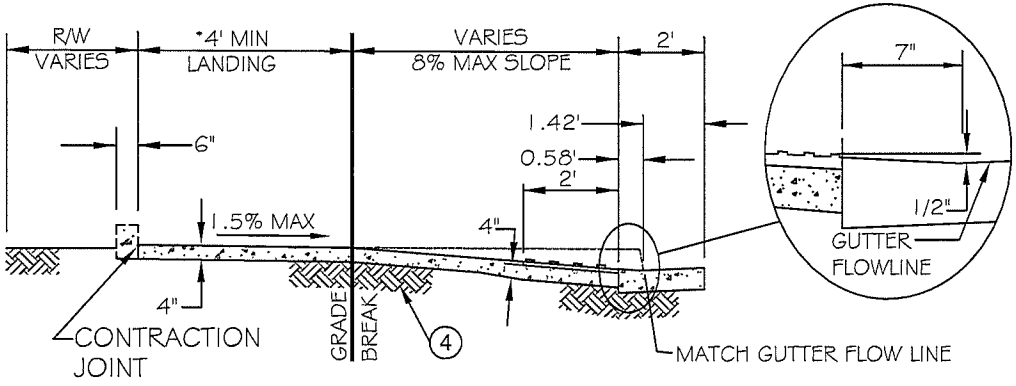

SECTION A-A

NOTES

1. CLASS "B" CONCRETE PER MAG SECTION 725.
2. LIMITS OF HEAVY ROUGH BROOM FINISH (TYP.)
3. EXPANSION JOINTS PER MAG SECTION 340.
4. SUBGRADE PREPARATION PER MAG SECTION 301.
5. OPTIONAL 6" CURB WITH 3' MIN. TRANSITION AS SHOWN, UNLESS OTHERWISE DIRECTED.
6. 2'x4' DETECTABLE WARNING PER APPROVED PRODUCTS LIST.
7. MUST MAINTAIN A 4'x4' LANDING PAD (TYP.)
8. 10% MAXIMUM WING SLOPE, ADJUST WING LENGTH AS NECESSARY (TYP.)

DETAIL NO. C-258 PAGE 2 OF 3	CITY OF CHANDLER STANDARD DETAIL	DIRECTIONAL CURB RAMP COLLECTOR STREETS	APPROVED: CITY ENGINEER DATE: 07-09-2015	DETAIL NO. C-258 PAGE 2 OF 3

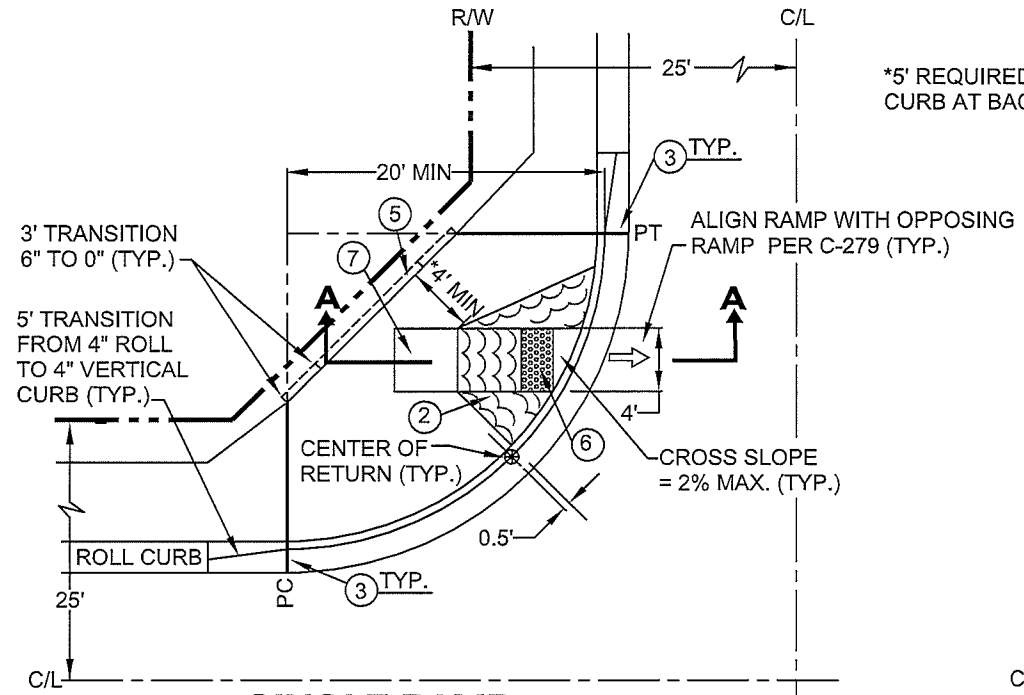

SINGLE RAMP

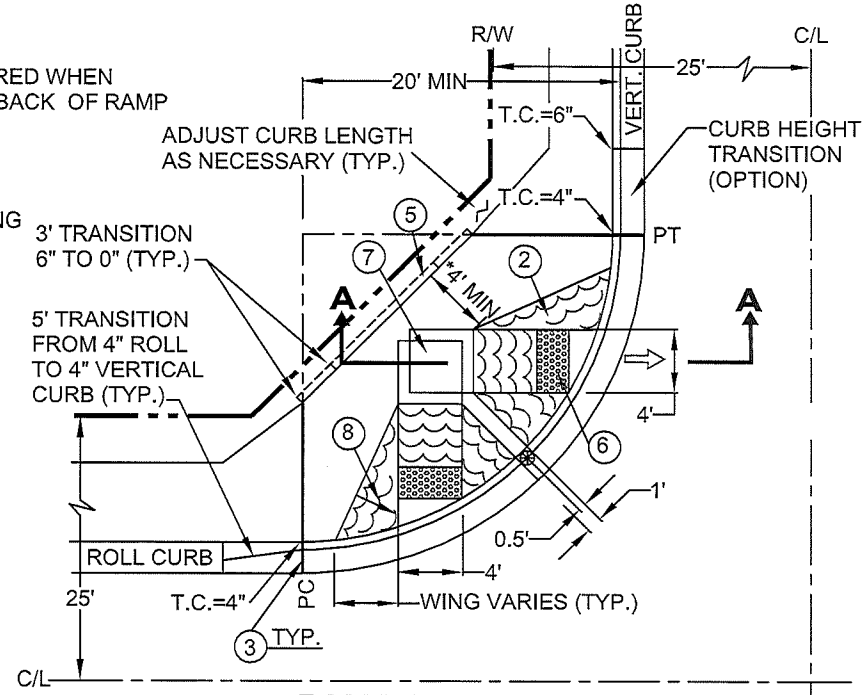

DUAL RAMP

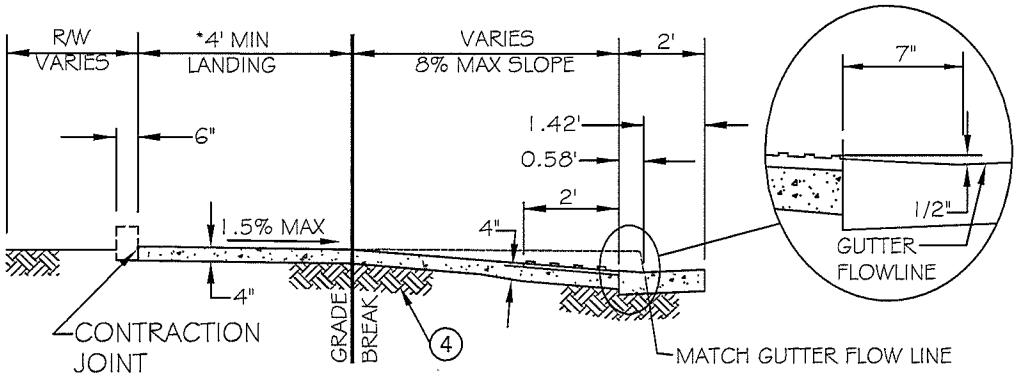

SECTION A-A

NOTES

1. CLASS "B" CONCRETE PER MAG SECTION 725.
2. LIMITS OF HEAVY ROUGH BROOM FINISH (TYP.)
3. EXPANSION JOINTS PER MAG SECTION 340.
4. SUBGRADE PREPARATION PER MAG SECTION 301.
5. OPTIONAL 6" CURB WITH 3' MIN. TRANSITION AS SHOWN, UNLESS OTHERWISE DIRECTED.
6. 2'x4' DETECTABLE WARNING PER APPROVED PRODUCTS LIST.
7. MUST MAINTAIN A 4'x4' LANDING PAD (TYP.)
8. 10% MAXIMUM WING SLOPE, ADJUST WING LENGTH AS NECESSARY (TYP.)

DETAIL NO. C-258 PAGE 3 OF 3	CITY OF CHANDLER STANDARD DETAIL	DIRECTIONAL CURB RAMP LOCAL STREETS	APPROVED: CITY ENGINEER DATE: 07-09-2015	DETAIL NO. C-258 PAGE 3 OF 3

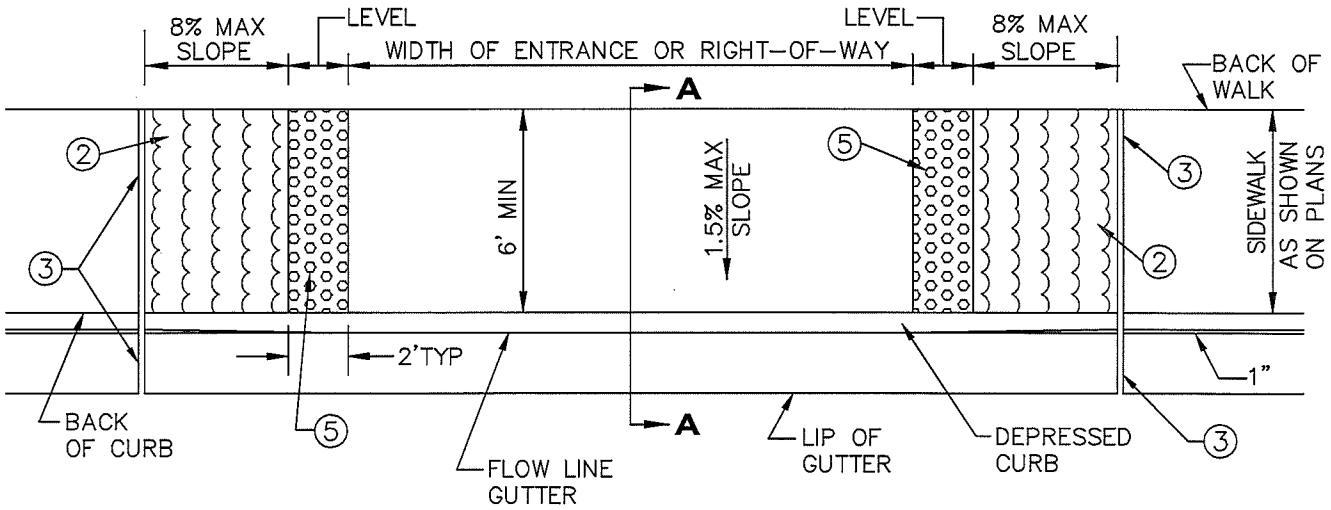

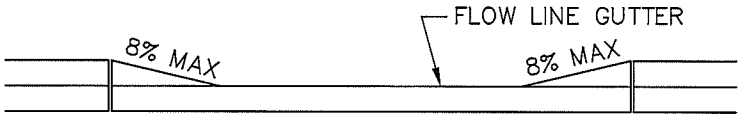

ELEVATION

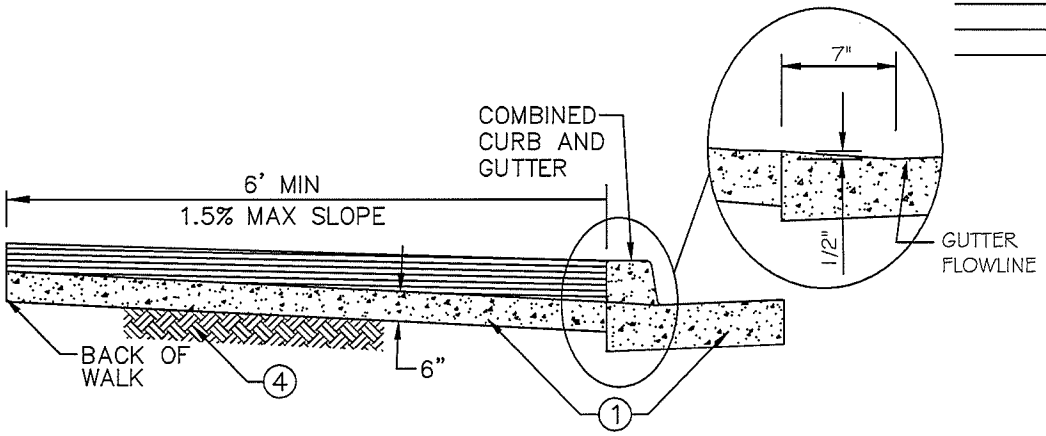

SECTION A-A

NOTES:

1. CLASS "B" CONCRETE PER MAG SECTION 725.
2. LIMITS OF HEAVY ROUGH BROOM FINISH.
3. EXPANSION JOINTS PER MAG 340.
4. SUBGRADE PREPARATION PER MAG SECTION 301.
5. DETECTABLE WARNING PER APPROVED PRODUCTS LIST.

DETAIL NO.					DETAIL NO.
C-259	CITY OF CHANDLER STANDARD DETAIL	**MODIFIED ENTRANCE**	APPROVED: CITY ENGINEER		**C-259**
NTS			DATE: 07-09-2015		NTS

PARALLEL PARKING OPTION

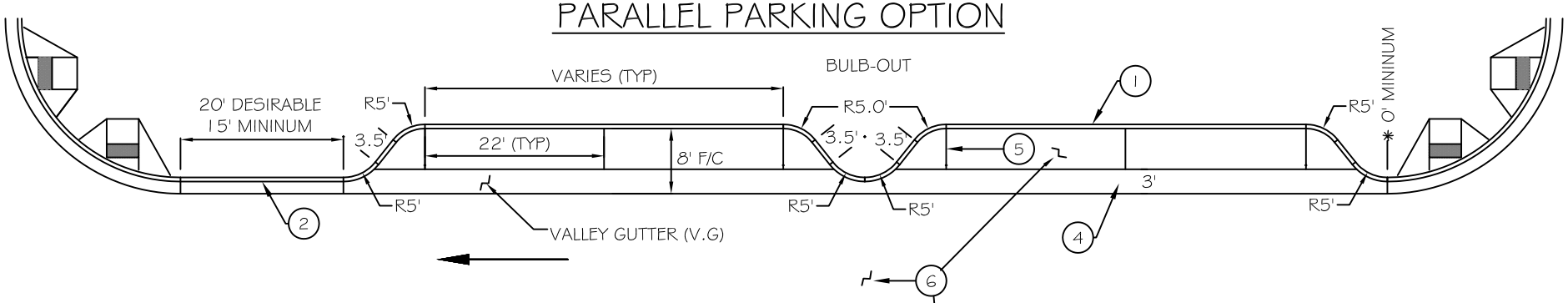

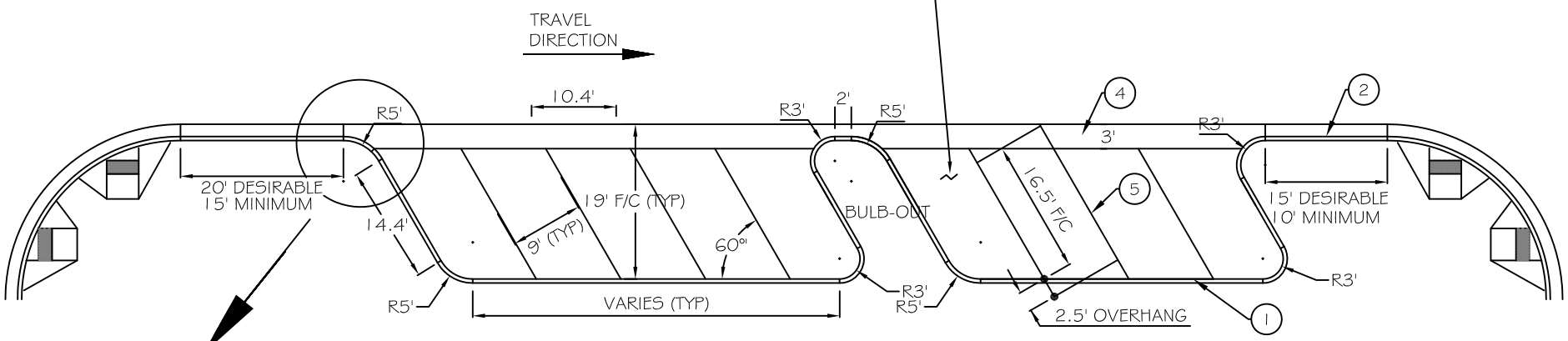

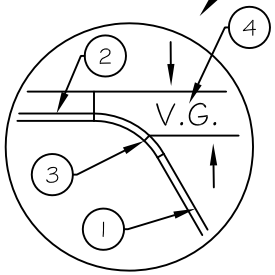

TYPICAL

ANGLE PARKING OPTION

ALL DIMENSIONS SHOW ARE TO BACK-OF-CURB, UNLESS OTHERWISE NOTED

NOTES:

1. 6" SINGLE CURB PER MAG STD DTL 222, TYPE 'A'.
2. 6" VERTICAL CURB AND GUTTER PER MAG STD DTL 220-1, TYPE A.
3. TRANSITION POINT FROM SINGLE CURB TO VERTICAL CURB AND GUTTER.
4. VALLEY GUTTER SHALL BE CLASS "B" PER MAG SEC 725 AND INSTALLED PER MAG SEC 505. BRUSH AND TROWEL PER C-215.
5. 4" SOLID WHITE LINE. MARKING IN CONCRETE VALLEY GUTTER NOT NECESSARY.
6. SEE ON-STREET PARKING TYPICAL CROSS SECTION, C-215, FOR FURTHER REQUIREMENTS.
7. SEE CITY TDM# 4, SECTION 4, FOR FURTHER REQUIREMENTS.

DETAIL NO.					DETAIL NO.
C-260	CITY OF CHANDLER STANDARD DETAIL	**ON-STREET PARKING USING BULB-OUTS**	APPROVED: CITY ENGINEER		**C-260**
PAGE 1 OF 2			DATE: 01-09-2020		PAGE 1 OF 2

GRADES WITHIN PARKING AISLE AND SPACES SHALL NOT EXCEED 2% IN ANY DIRECTION, INCLUDING VALLEY GUTTER.

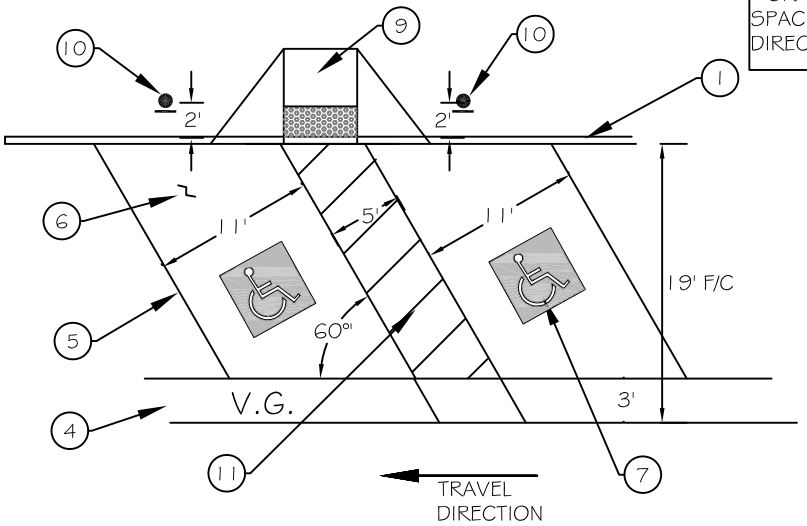

ACCESSIBLE ANGLE PARKING

*ACCESS AISLE REQUIRED WHEN MINIMUM 14' SIDEWALK IS AVAILABLE (TYP)

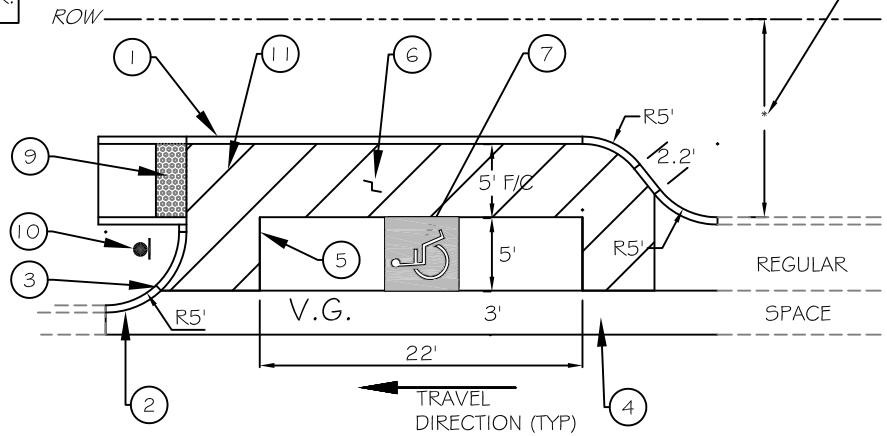

ACCESSIBLE PARALLEL PARKING

(END OF BLOCK)

REQUIRED ONLY IN SPECIFIC SITUATIONS. SEE TDM #4, SECTION 4.

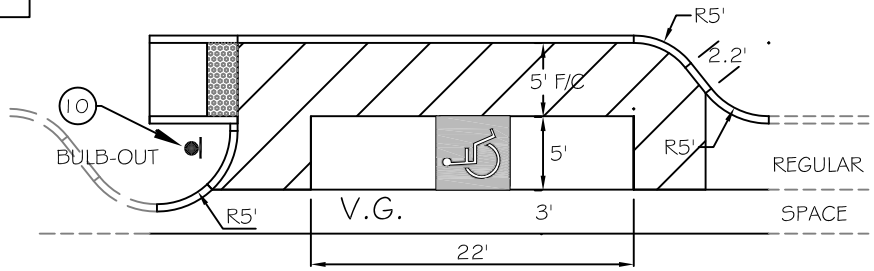

(MID BLOCK)

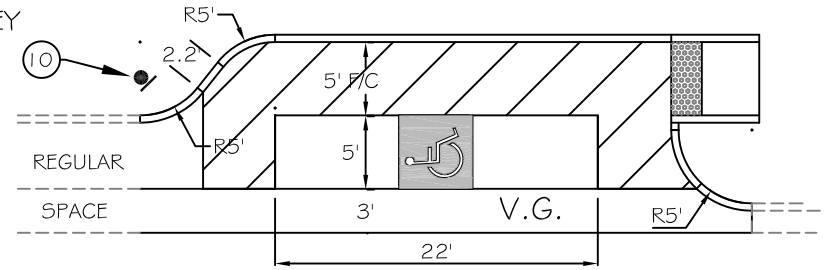

(START OF BLOCK)

NOTES:

1. 6" SINGLE CURB PER MAG STD DTL 222, TYPE 'A'.
2. 6" VERTICAL CURB AND GUTTER PER MAG STD DTL 220-1, TYPE A.
3. TRANSITION POINT FROM SINGLE CURB TO VERTICAL CURB AND GUTTER.
4. VALLEY GUTTER SHALL BE CLASS "B" PER MAG SEC 725 AND INSTALLED PER MAG SEC 505. BRUSH AND TROWEL PER C-215.
5. 4" SOLID WHITE LINE. MARKING IN CONCRETE GUTTER NOT NECESSARY.
6. SEE ON-STREET PARKING TYPICAL CROSS SECTION, C-215, FOR FURTHER REQUIREMENTS.
7. ACCESSIBLE PARKING SYMBOL PER C-612. DO NOT MARK IN CONCRETE VALLEY GUTTER.
8. IN-LINE RAMP PER C-257. COMPLY WITH RAMP GRADES AND LANDING REQUIREMENTS.
9. PERPENDICULAR RAMP PER C-258, PG 1. COMPLY WITH RAMP GRADES AND LANDING REQUIREMENTS.
10. ACCESSIBLE PARKING SIGN PER C-611.
11. 5' WIDE ACCESS AISLE MARKED WITH 4" SOLID WHITE LINES, 3' ON CENTER.

DETAIL NO.					DETAIL NO.
C-260	CITY OF CHANDLER STANDARD DETAIL	**ON-STREET PARKING ACCESSIBLE SPACES**	APPROVED: CITY ENGINEER		**C-260**
PAGE 2 OF 2			DATE: 01-09-2020		PAGE 2 OF 2

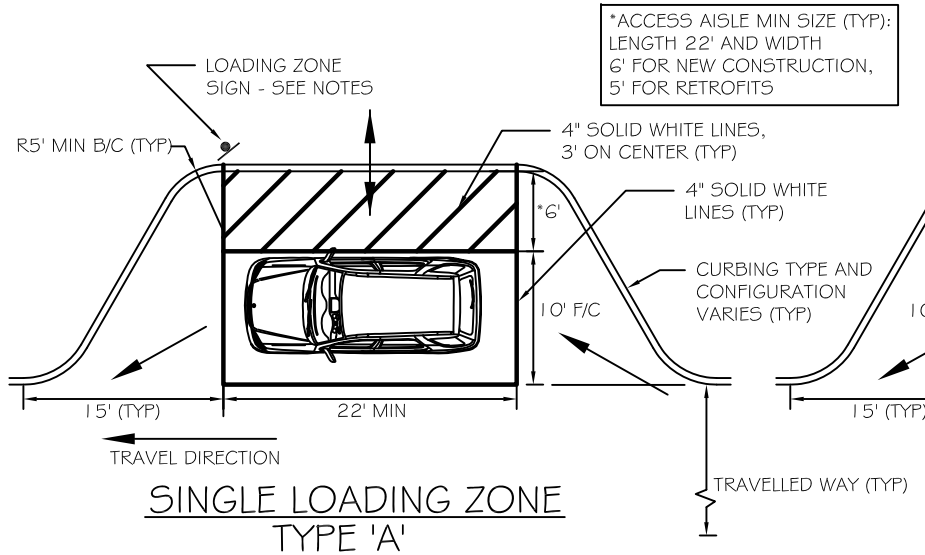

SINGLE LOADING ZONE
TYPE 'A'

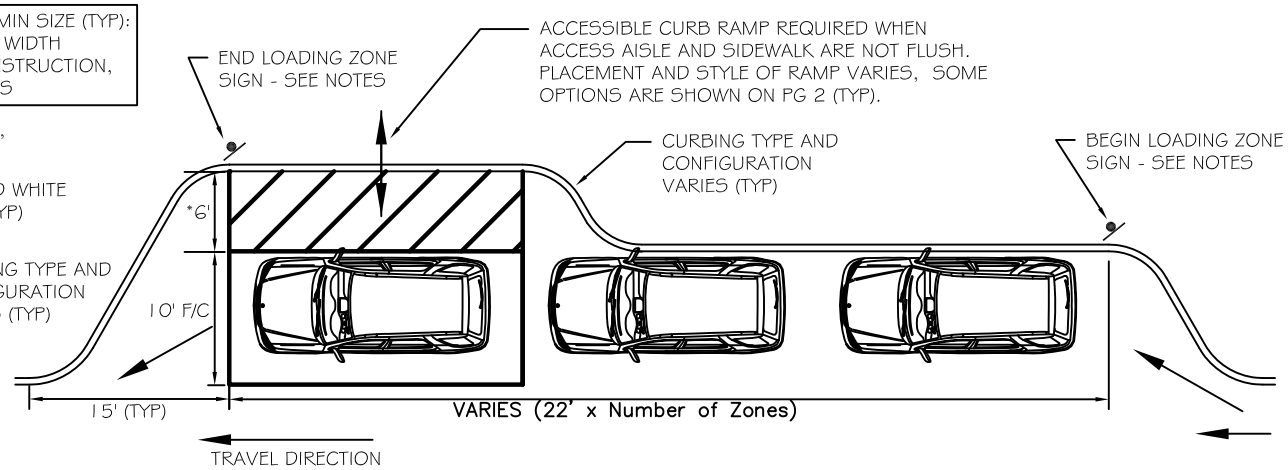

CONTINUOUS LOADING ZONE
TYPE 'A'

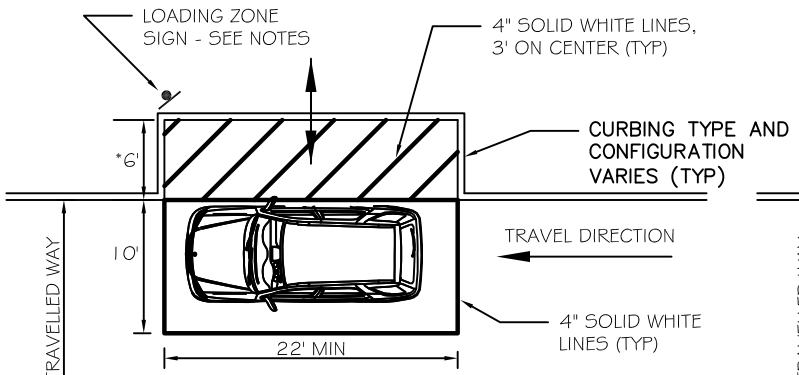

SINGLE LOADING ZONE
TYPE 'B'

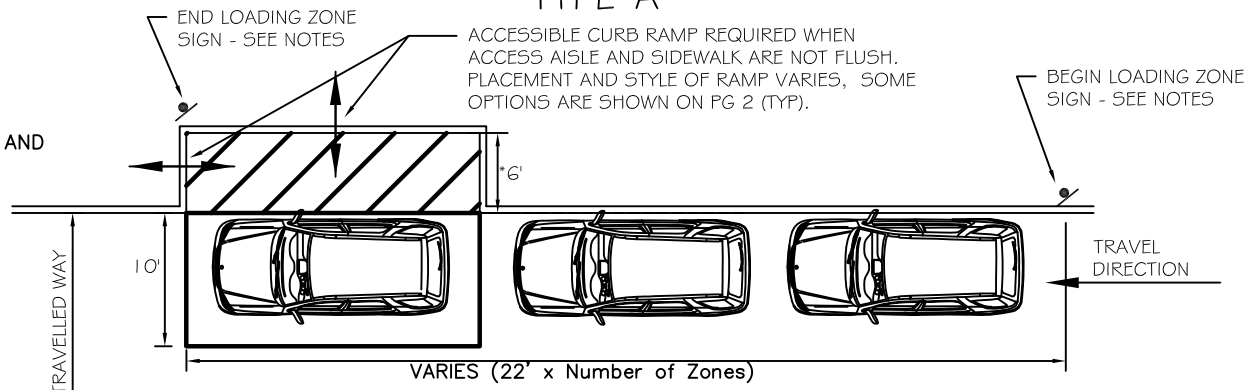

CONTINUOUS LOADING ZONE
TYPE 'B'

NOTES:

1. REFER TO THE STREET DESIGN AND ACCESS CONTROL TDM #4 FOR GUIDELINES ON USE OF THIS DETAIL.
2. ACCESS AISLE SHALL ADJOIN AN ACCESSIBLE ROUTE AND SHALL NOT OVERLAP TRAVELLED WAY.
3. FOR MULTIPLE AND CONTINUOUS LOADING ZONES, ONE ACCESSIBLE LOADING ZONE SHALL BE PROVIDED EVERY 100 FT.
4. LOADING ZONE SIGN SHALL BE PER DETAIL A ON PAGE 2. FOR MULTIPLE LOADING ZONES, SIGN SHALL BE PROVIDED AT BEGINNING AND ENDING WITH ADDITIONAL ARROW SIGN. BOTTOM OF SIGN SHALL BE MOUNTED 7' ABOVE FINISH GRADE.
5. CURB RAMPS INSTALLED IN PUBLIC RIGHTS-OF-WAY REQUIRE DETECTABLE WARNING SYSTEM PER CITY APPROVED PRODUCTS LIST.

DETAIL NO.					DETAIL NO.
C-261	CITY OF CHANDLER STANDARD DETAIL	**PASSENGER LOADING ZONES FOR AUTONOMOUS VEHICLES AND RIDE SHARING**	APPROVED: CITY ENGINEER		**C-261**
PAGE 1 OF 2			DATE: 05-10-2018		PAGE 1 OF 2

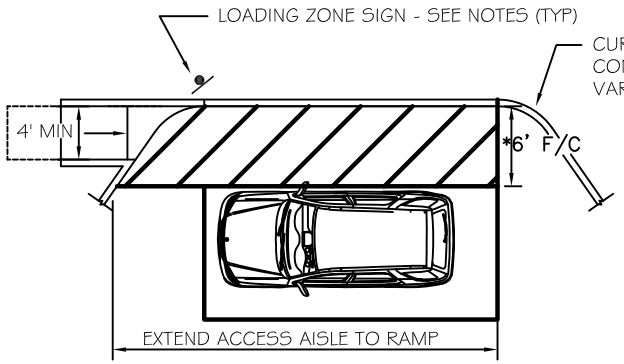

OPTION A: PERPENDICULAR RAMP (LEFT OR RIGHT SIDE)

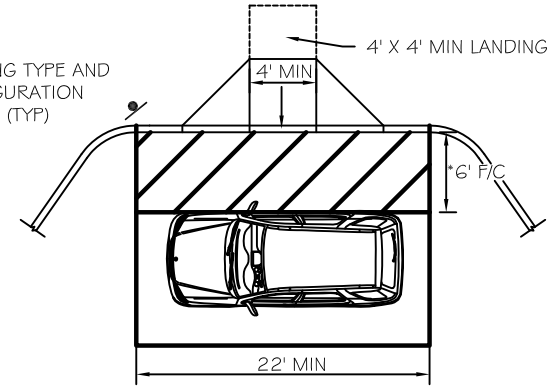

OPTION B: PERPENDICULAR RAMP

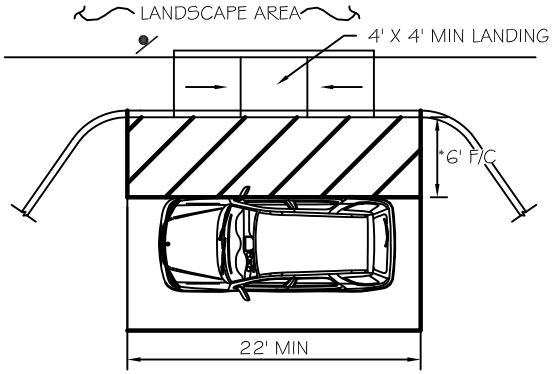

OPTION C: PARALLEL RAMP

NOTE - SIGNS ARE TYPICALLY MOUNTED AT 45 DEGREES.

DETAIL A

DETAIL NO.					DETAIL NO.
C-261	CITY OF CHANDLER STANDARD DETAIL	**PASSENGER LOADING ZONES FOR AUTONOMOUS VEHICLES AND RIDE SHARING**	APPROVED: CITY ENGINEER		**C-261**
PAGE 2 OF 2			DATE: 01-09-2020		PAGE 2 OF 2

WATER
C-300 TO C-322

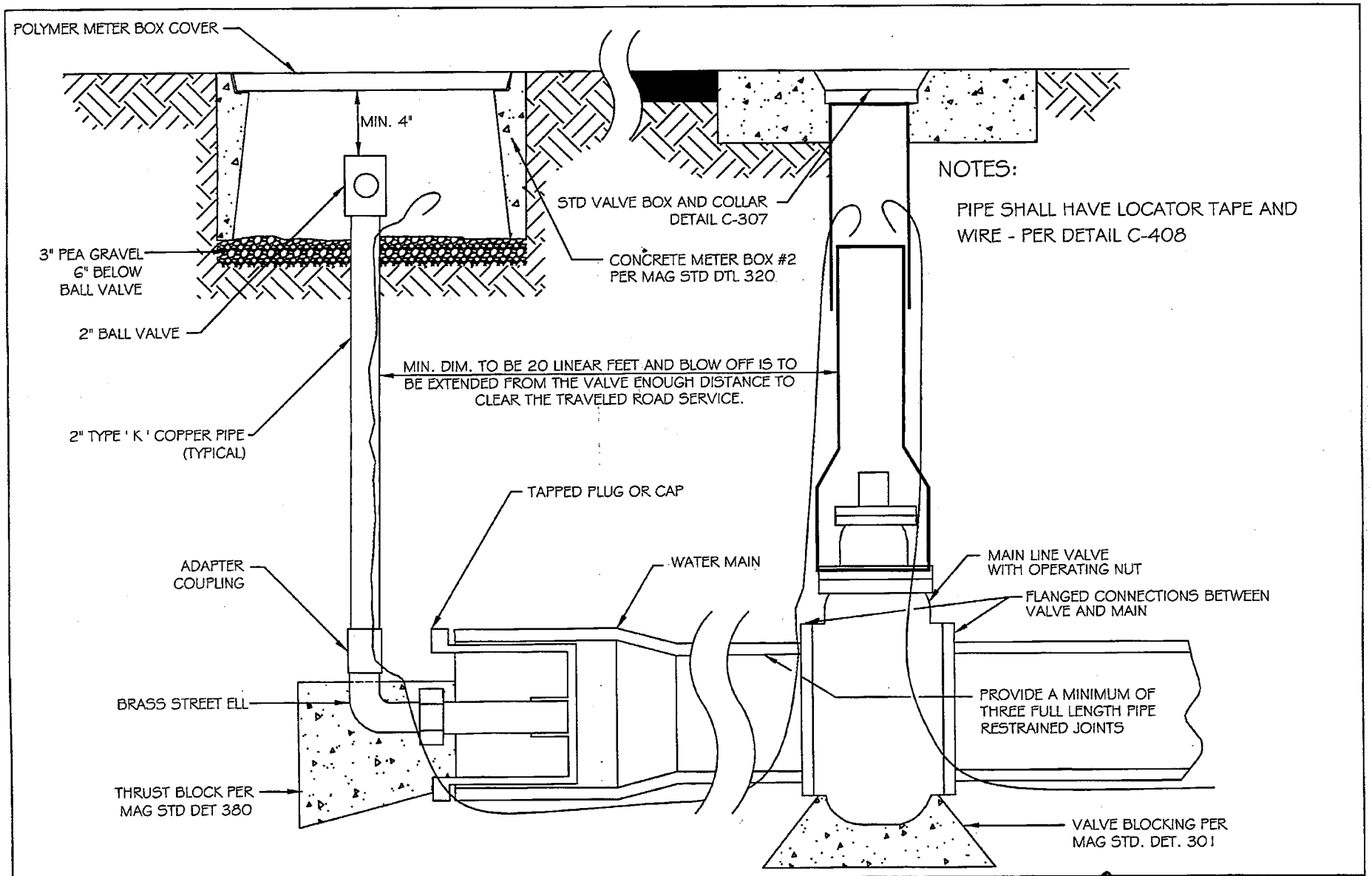

NOTES:

PIPE SHALL HAVE LOCATOR TAPE AND WIRE - PER DETAIL C-408

DETAIL NO.					DETAIL NO.
C-300 NTS	CITY OF CHANDLER STANDARD DETAIL	**FLUSHING PIPE ASSEMBLY WITH BALL VALVE**	APPROVED: CITY ENGINEER	DATE: 01/08/09	**C-300** NTS

CAUTION: BEFORE SERVICES ARE INSTALLED, DRIVEWAY LOCATIONS SHOULD BE VERIFIED AND THE SERVICES CONSTRUCTED TO AVOID CONFLICTS

NOTES:

1. TYPE 'K' RIGID COPPER SERVICE (1-1/2" & LARGER) SHALL HAVE SWEAT JOINTS. 1" SERVICES SHALL BE TYPE K SOFT COPPER WITH FLARED FITTINGS. COMPRESSION FITTINGS ARE NOT ALLOWED.
2. CONTRACTOR SHALL BACKFILL AND COMPACT THE TRENCHES PER MAG STANDARD SPECIFICATION TABLE 601-2.
3. CITY OF CHANDLER TO SET WATER METERS WHEN ORDERED BY OWNER/DEVELOPER. THE CITY DOES NOT PROVIDE ANY PARTS NEEDED PRIOR TO, OR AFTER, METER INSTALLATION. CONTRACTOR SHALL PROVIDE BRASS BOLTS FOR LARGER THAN 1" METERS.
4. ANGLE BALL METER VALVE SHALL BE PER APPROVED PRODUCTS LIST. NO APPROVED EQUALS. SET 11" BELOW TOP OF THE METER BOX.
5. METER BOX SHALL BE SET WITHIN CITY RIGHT OF WAY, OR DEDICATED WATERLINE EASEMENT. TOP OF BOX SHALL BE FLUSH WITH TOP OF SIDEWALK, OR IN CASES OF SLOPING YARDS, FLUSH WITH DRIVE PERPENDICULAR TO STREET.
6. LONG DIMENSION OF METER AND BOX SHALL BE PERPENDICULAR TO STREET.
7. NO METER SHALL BE SET IN ANY CONCRETE OR PERMANENT STRUCTURE.
8. METER BOX PER MAG STD. DET. 320, CONCRETE OR POLYMER EQUAL.
9. METERS BOXES IN PARALLEL INSTALLATION SHALL HAVE A MINIMUM 4" CLEAR ON THE SIDES. WHERE BACKFLOW ASSEMBLIES ARE SPECIFIED, EACH METER SHALL HAVE ITS OWN BACKFLOW ASSEMBLY.
10. BOX COVER (LID) SHALL BE POLYMER CONCRETE OR MODIFIED POLYETHYLENE PER MAG DET. 315 WITH METER READER ANTENNA HOLE. BOX COVERS FOR RECLAIMED WATER SERVICES SHALL BE PAINTED PANTONE 512 PURPLE. COVER SHALL IDENTIFY "CITY OF CHANDLER" AND SPECIFY "WATER" OR "RECLAIMED WATER". COVERS MUST PROPERLY FIT IN THE #2 AND #4 CONCRETE BOXES IN ACCORDANCE WITH MAG CONCRETE METER BOX SPECIFICATIONS.

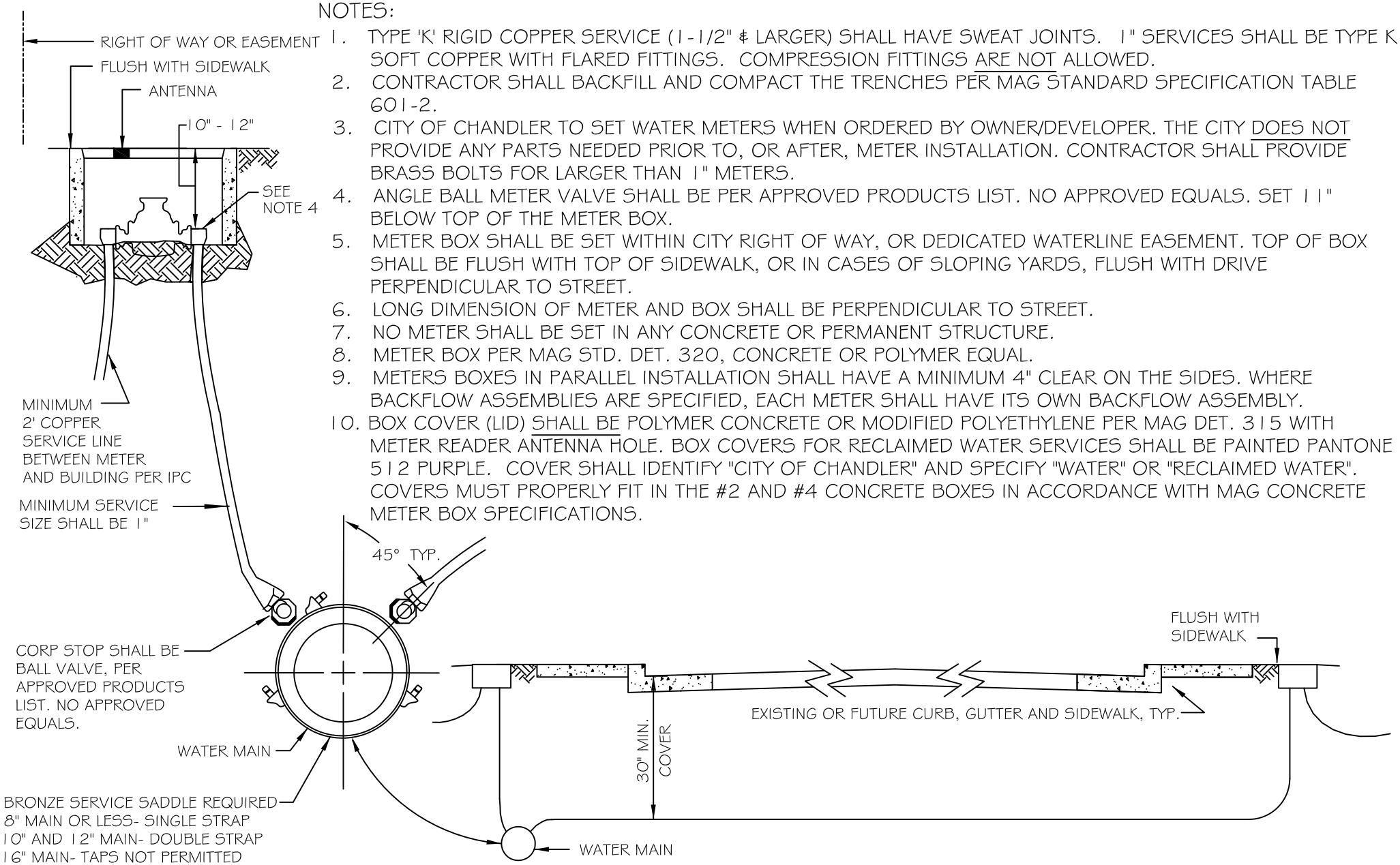

DETAIL NO.					DETAIL NO.
C-301	CITY OF CHANDLER STANDARD DETAIL	**WATER SERVICE INSTALLATION**	APPROVED: CITY ENGINEER		**C-301**
PAGE 1 OF 2			DATE: 05-10-2018		PAGE 1 OF 2

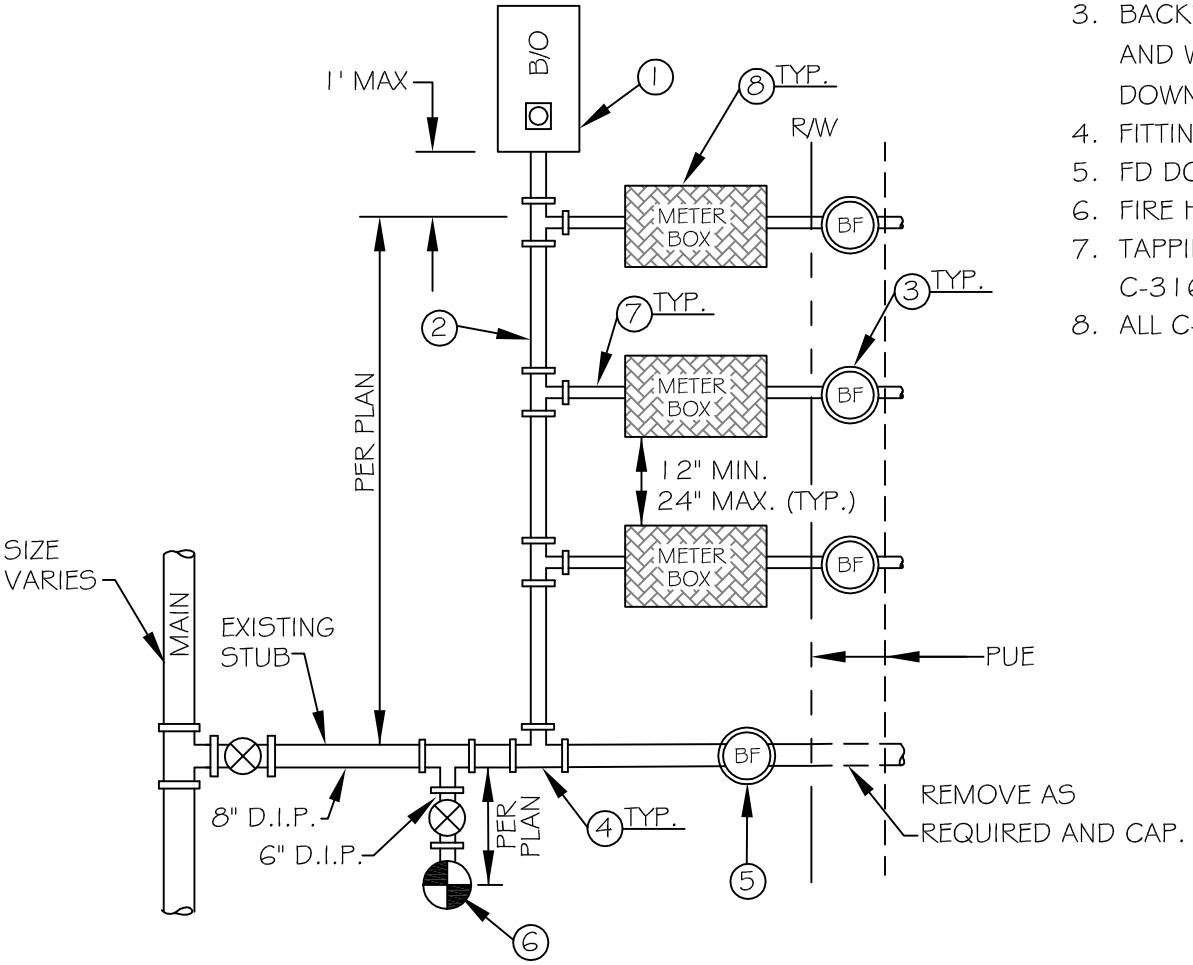

NOTES

1. FLUSHING PIPE ASSEMBLY WITH BALL PER C-300.
2. MIN. 6" D.I.P.
3. BACKFLOW PREVENTION PER PLAN, INSTALLED INLINE AND WITHIN 6 INCHES OF METER BOX, IMMEDIATELY DOWNSTREAM OF THE LINESETTER.
4. FITTINGS PER PLAN. FLANGED FITTINGS ONLY.
5. FD DOUBLE CHECK DETECTOR AS NEEDED PER PLAN.
6. FIRE HYDRANT AS NEEDED PER PLAN.
7. TAPPING: USE C-301 FOR 2" AND SMALLER OR C-316 FOR LARGER THAN 2".
8. ALL C-301A NOTES APPLY.

DETAIL NO.					DETAIL NO.
C-301	CITY OF CHANDLER STANDARD DETAIL	**MULTI-METER WATER SERVICE INSTALLATION**	APPROVED: CITY ENGINEER		**C-301**
PAGE 2 OF 2			DATE: 3/14/2013		PAGE 2 OF 2

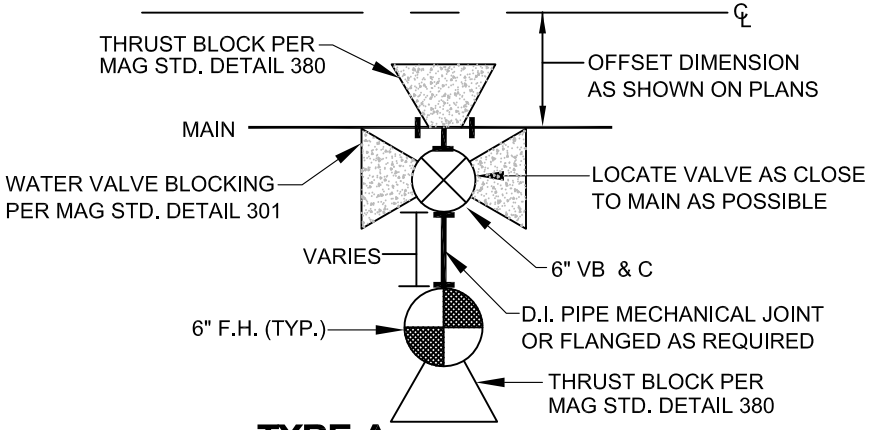

TYPE A

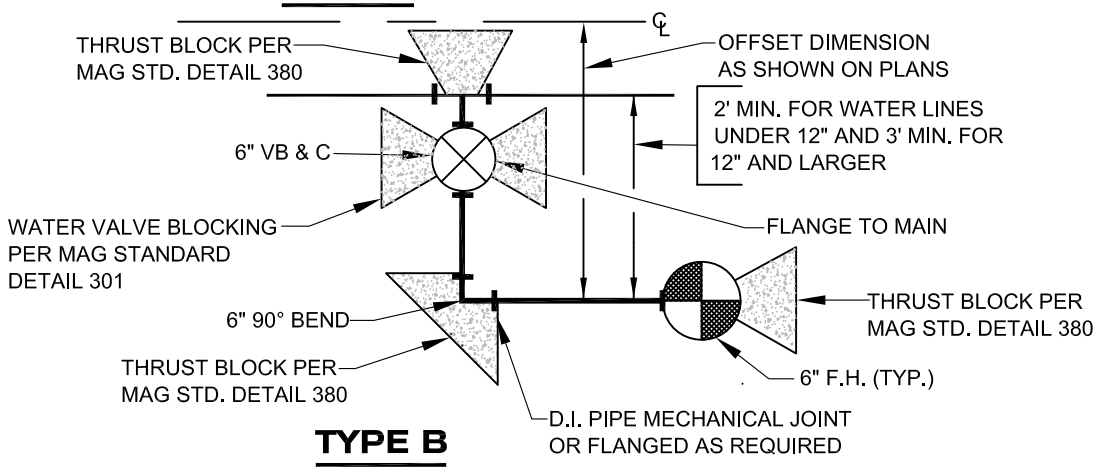

TYPE B

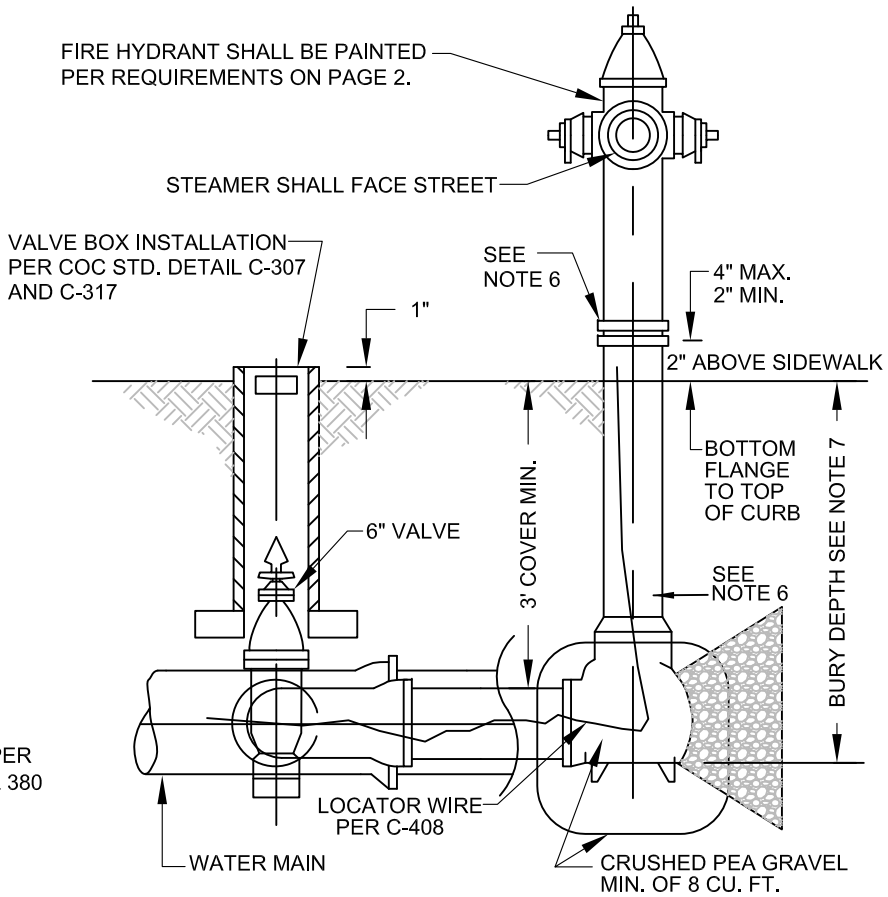

TYPICAL INSTALLATION

NOTES:

1. FIRE HYDRANT VALVES INCLUDING ALL FITTINGS & 45° BENDS SHALL BE RESTRAINED TO MAIN LINE TEE BY FLANGES.
2. FIRE HYDRANT SHALL BE PER CITY LIST OF APPROVED PRODUCTS.
3. CONNECTIONS SHALL BE 2-1/2" & 4-1/2" N.S. THREADS.
4. FIRE HYDRANT SHALL BE LOCATED PER DETAIL C-305 A MIN. OF 6' BEHIND FACE OF CURB, AND 12 INCHES BEHIND SIDEWALK, RIGHT OF WAY PERMITTING, AND INSTALLED SIX FEET BEYOND CURB RETURNS FOR HYDRANTS LOCATED AT INTERSECTIONS.
5. CAP CHAINS SHALL BE REMOVED AND THREADS GREASED WITH MANUFACTURER APPROVED HYDRANT GREASE.
6. EXTENSIONS ARE NOT ALLOWED.
7. STANDARD BURY DEPTHS ARE 36", 48", AND 54". ALL FITTINGS BETWEEN FH VALVE AND 6" HYDRANT RUNOUT SHALL BE RESTRAINED BY FLANGES.

DETAIL NO.					DETAIL NO.
C-303	CITY OF CHANDLER STANDARD DETAIL	**FIRE HYDRANT INSTALLATION**	APPROVED: CITY ENGINEER		**C-303**
PAGE 1 OF 3			DATE: 05-10-2018		PAGE 1 OF 3

COLOR CODE

THE CITY OF CHANDLER WATER DIVISION AND FIRE DEPARTMENT UTILIZE THE FOLLOWING COLOR CODE IN DISTINGUISHING THE VARIOUS TYPES OF FIRE HYDRANTS:

TYPE 1. CAT YELLOW: THE BARREL AND BONNET OF ALL FIRE HYDRANTS INSTALLED ON PUBLIC WATER MAINS IN RIGHTS-OF-WAY AND IN PUBLIC UTILITY EASEMENTS (PUE'S) SHALL BE PAINTED CAT YELLOW.

TYPE 2. GLOSS BLACK/CAT YELLOW: THE BONNET OR 3" DOWN OF ALL FIRE HYDRANTS INSTALLED ON PRIVATELY OWNED AND MAINTAINED WATER MAINS SHALL BE PAINTED GLOSS BLACK. THE BARREL SHALL BE PAINTED CAT YELLOW.

TYPE 3. BRILLIANT RED: THE BARREL AND BONNET SHALL BE PAINTED BRILLIANT RED AFTER THE FIRE DEPARTMENT CONNECTIONS (FDC'S). SPECIAL APPROVAL IS REQUIRED FOR ALL RED HYDRANTS BY THE FIRE MARSHAL. FIRE DEPARTMENT SIAMESE CONNECTIONS (FDC'S). ALL SUCH FIRE HYDRANTS SHALL BE ISOLATED FROM THE MUNICIPAL WATER SYSTEM BY DOUBLE DETECTOR CHECK VALVES. ALL RED HYDRANTS SHALL BE APPROVED BY THE FIRE MARSHAL.

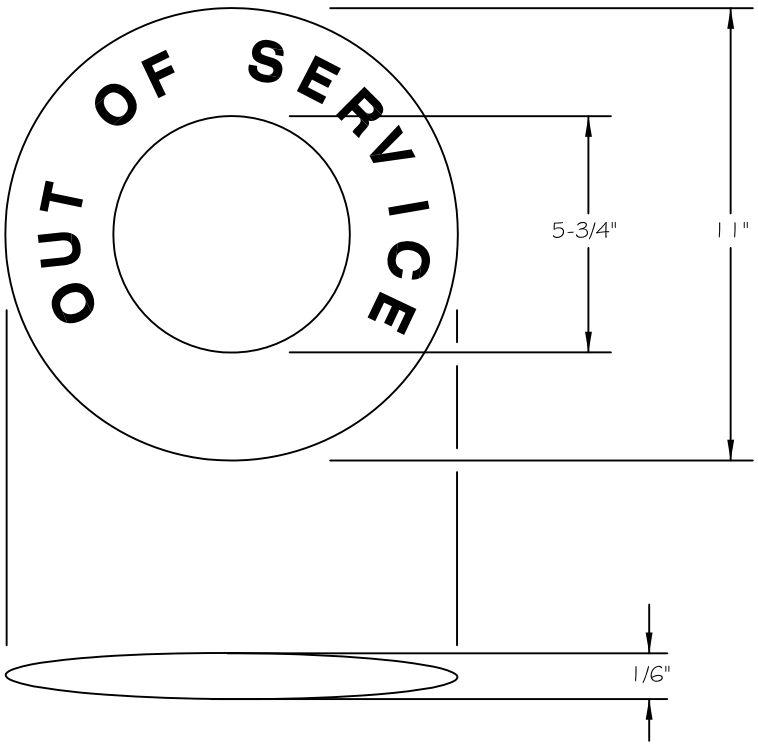

NOTE:

ALL FIRE HYDRANTS INSTALLED ON PRIVATE AND PUBLIC WATER LINES SHALL BE PROVIDED WITH "OUT OF SERVICE" SIGNS AT TIME OF INSTALLATION. UPON COMPLETION OF REQUIRED INSPECTIONS, TESTS, ACCEPTANCE, AND APPROVAL OF THE WATER SYSTEM BY A C.O.C. INSPECTOR AND THE SYSTEM IS VERIFIED TO BE IN SERVICE, THE "OUT OF SERVICE" SIGNS SHALL BE REMOVED. A HYDRANT REMOVED FROM SERVICE SHALL BE PROVIDED AN "OUT OF SERVICE" SIGN WITHIN THE INITIAL 2 HOURS OF THE SERVICE INTERRUPTION. SIGNS SHALL BE IN ACCORDANCE WITH THIS DETAIL. SIGNS SHALL BE PERMANENTLY MARKED AND CONSTRUCTED OF WEATHERPROOF METAL OR RIGID PLASTIC MATERIAL. THE COLOR OF LETTERING ON SIGNS SHALL BE IN HIGH CONTRAST WITH THEIR BACKGROUND. SIGNS SHALL HAVE THE WORDS "OUT OF SERVICE" ON THE SIGN IN BLOCK CAPITAL LETTERS NOT LESS THAN 1-1/2" IN HEIGHT WITH A STROKE OF NOT LESS THAN 1/4".

DETAIL NO. **C-303** PAGE 3 OF 3	CITY OF CHANDLER STANDARD DETAIL	**FIRE HYDRANT INSTALLATION 'OUT OF SERVICE' SIGNS**	APPROVED: CITY ENGINEER DATE: 05-10-2018	DETAIL NO. **C-303** PAGE 3 OF 3

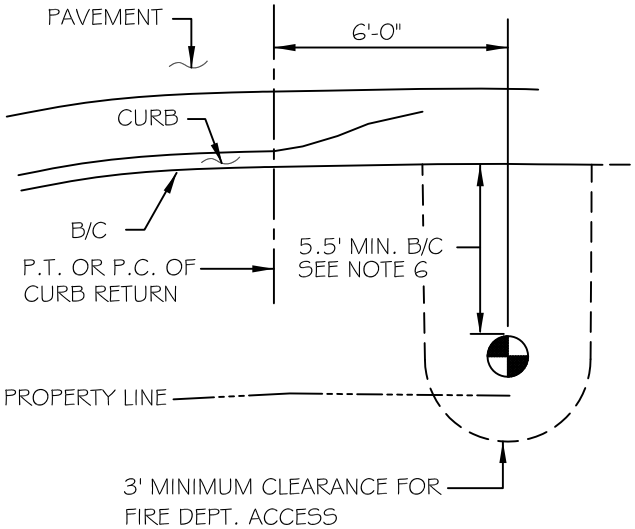

PARKWAY AREA, NO SIDEWALK

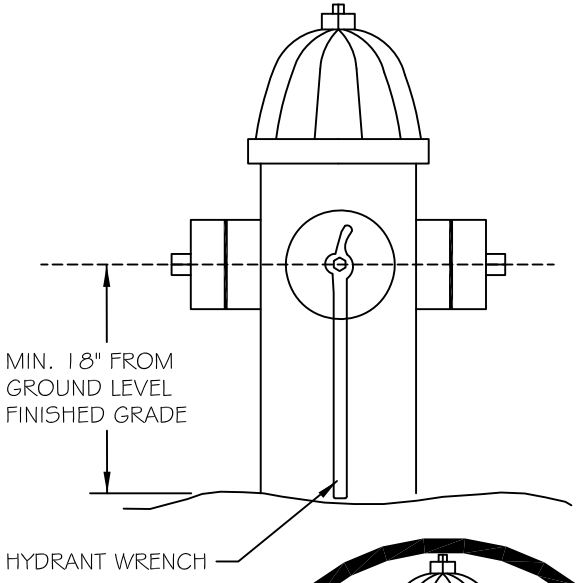

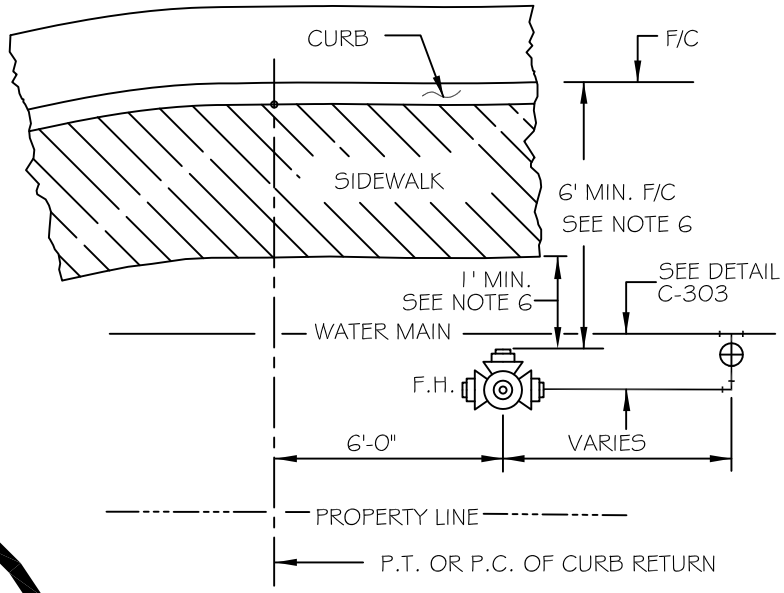

AREA WITH SIDEWALK

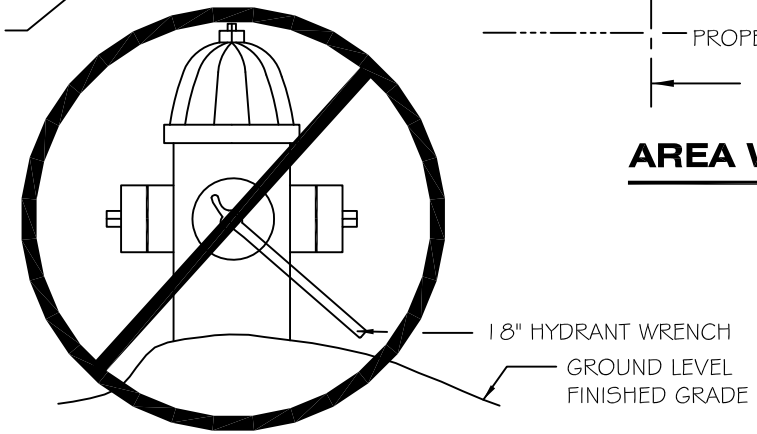

NOTES:

1. INSTALLATION SHALL BE PER STANDARD DETAIL C-303.
2. DIMENSIONS SHOWN ON APPROVED CONSTRUCTION DRAWINGS MAY SUPERSEDE LOCATIONS SHOWN HERE.
3. OBSTRUCTIONS SUCH AS UTILITY POLES, STREET SIGNS, IRRIGATION BOXES, FENCES, ETC., MUST NOT BE PLACED BETWEEN CURB AND HYDRANT.
4. ON LOCATIONS IN MIDBLOCK, THE FIRE HYDRANT WILL BE ALIGNED WITH A PROPERTY LINE AND 6' MINIMUM FROM DRIVEWAYS.
5. ALL FIRE HYDRANTS INSTALLED PER STANDARD DETAIL C-303 SHALL BE LOCATED IN ACCORDANCE WITH THIS DETAIL.
6. MINIMUM DIMENSION MUST BE SIDEWALK WIDTH PLUS ONE (1) FOOT OR SIX (6) FEET FROM FACE OF CURB, WHICHEVER IS GREATER.
7. IN INDUSTRIAL/COMMERCIAL ZONES A MINIMUM OF 6' FROM DRIVEWAYS SHALL BE MAINTAINED WITH VALVE INSTALLED AWAY FROM DRIVEWAY.
8. 3 FOOT UNOBSTRUCTED CLEARANCE AROUND FIRE HYDRANT AND HYDRANT VALVE. NO TREES, BUSHES, FENCES, WALLS, OR RIVER ROCK. NO CACTUS WITHIN 10 FEET OF A HYDRANT OR HYDRANT VALVE.

DETAIL NO.					DETAIL NO.
C-305	CITY OF CHANDLER STANDARD DETAIL	**LOCATIONS FOR NEW FIRE HYDRANT**	APPROVED: CITY ENGINEER		**C-305**
NTS			DATE: 05-10-2018		NTS

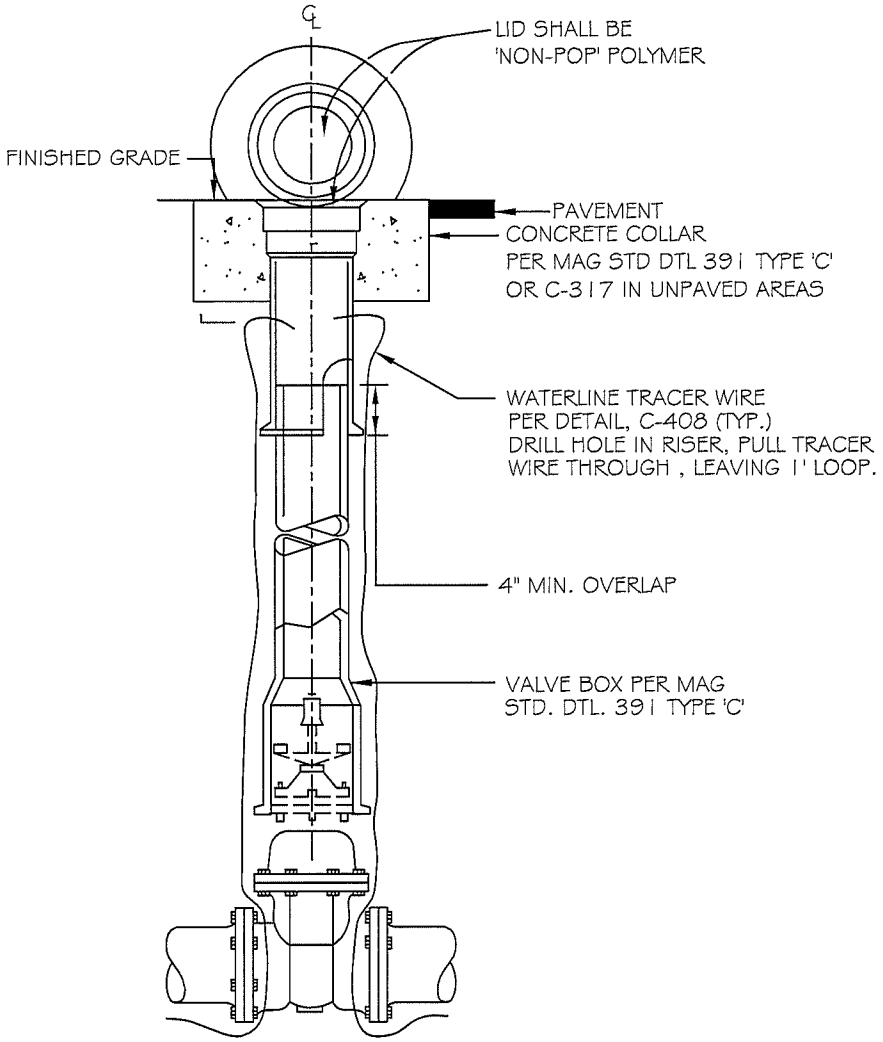

NOTES:

1. IN UNPAVED AREAS, CONCRETE COLLAR SHALL CONFORM TO DETAIL C-317.
2. BACKFILL SHALL BE 1/2 SACK CLSM. PER MAG. SPECIFICATION 718.
3. VALVE BOXES SHALL NOT BE INSTALLED WITHIN CONCRETE GUTTER, SIDEWALK, RAMPS OR VALLEY GUTTER.

DETAIL NO.					
C-307	CITY OF CHANDLER STANDARD DETAIL	**VALVE BOX INSTALLATION (POTABLE WATER)**	APPROVED: CITY ENGINEER		DETAIL NO. **C-307**
NTS			DATE: 07-09-2015		NTS

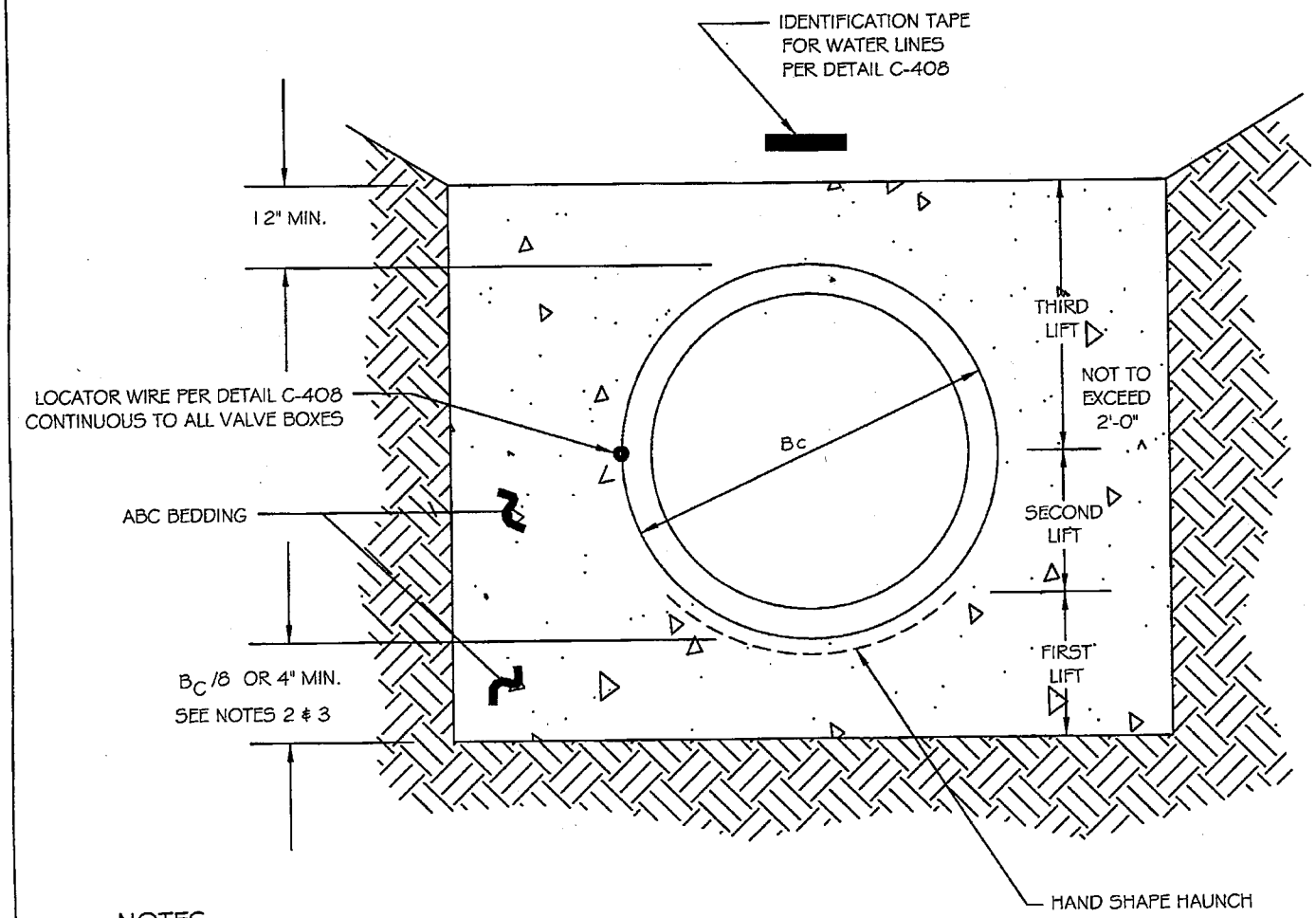

NOTES:

1. TRENCH WIDTH IN ACCORDANCE WITH MAG STD. TABLE 601-1.
2. MINIMUM 4" FOR PIPES 12" OR SMALLER.
3. MINIMUM 6" FOR PIPES LARGER THAN 12".

DETAIL NO.					DETAIL NO.
C-308 NTS	CITY OF CHANDLER STANDARD DETAIL	**WATER PIPE BEDDING DETAIL**	APPROVED: CITY ENGINEER DATE: 01/08/09		**C-308** NTS

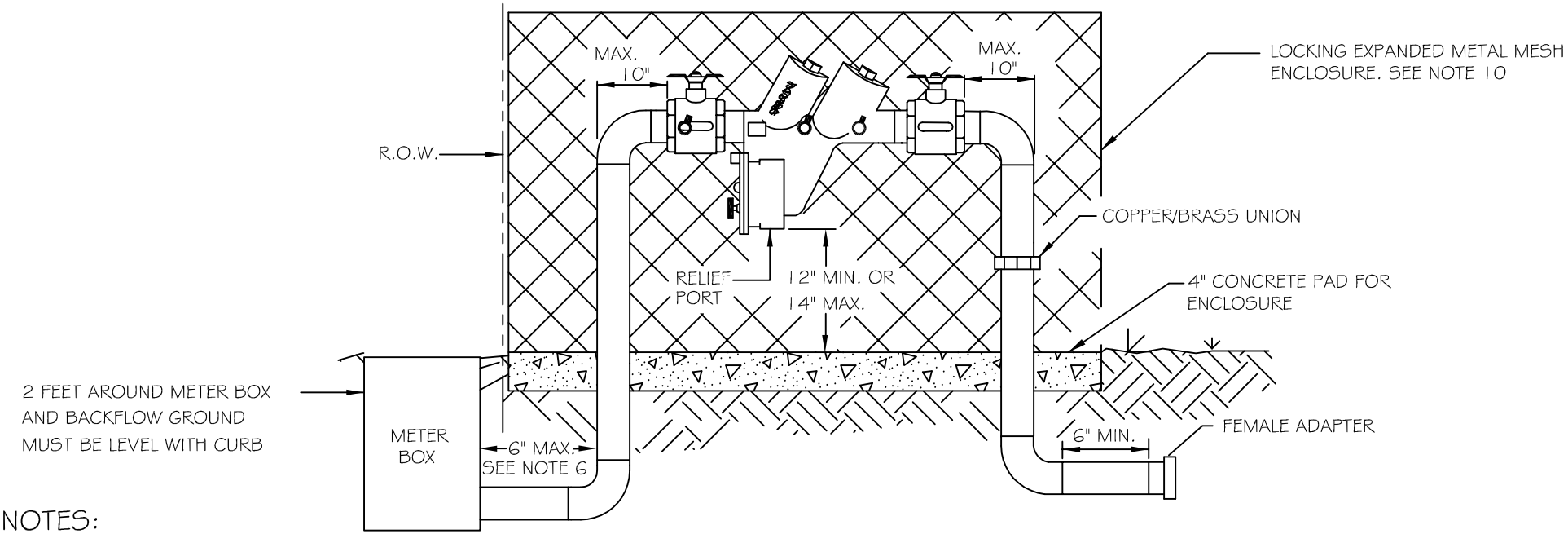

NOTES:

1. ASSEMBLY SHALL BE APPROVED BY UNIVERSITY OF SOUTHERN CALIFORNIA (USC) FOUNDATION FOR CROSS-CONNECTION CONTROL AND HYDRAULIC RESEARCH. LIST OF APPROVED ASSEMBLIES ON FILE AT CIVIL ENGINEERING.
2. SHUTOFF VALVES SHALL BE RESILIENT BALL TYPE WITH REMOVABLE HANDLES.
3. ALL PIPE AND FITTINGS SHALL BE TYPE 'K' RIGID COPPER. COMPRESSION FITTINGS ARE NOT ALLOWED.
4. TEST COCKS SHALL BE FITTED WITH BRASS PLUGS INSTALLED WITH TEFLON TAPE.
5. NO TAPS SHALL BE ALLOWED BETWEEN THE METER AND THE BACKFLOW PREVENTION ASSEMBLY.
6. INSTALL BACKFLOW PREVENTION ASSEMBLY INLINE AND WITHIN 6 INCHES OF THE METER BOX, IMMEDIATELY DOWNSTREAM OF THE LINESETTER.
7. THE COPPER/BRASS UNION MAY NOT BE REQUIRED IF THE ASSEMBLY INCORPORATES THE UNION.
8. INSTALL BACKFLOW PREVENTION ASSEMBLY WITH RELIEF PORT FACING TOWARD THE GROUND.
9. BACKFLOW PREVENTION INSTALLATION MUST BE LEVEL, AND INSTALLED A MINIMUM OF 12 INCHES AND A MAXIMUM OF 14 INCHES FROM RELIEF PORT TO FINAL GRADE.
10. LOCKING ENCLOSURE SHALL BE GUARD SHACK OR EQUIVALENT, PAINTED 'DESERT TAN' WITH TNEMEC EDUROSHIELD PER MFG'S INSTRUCTIONS. MINIMUM 12 MILS DFT.
11. BACKFLOW PREVENTION ASSEMBLY SHALL HAVE AT LEAST THE SAME CROSS-SECTIONAL AREA AS THE WATER METER BUT NO MORE THAN ONE SIZE LARGER THAN THE METER.

DETAIL NO.					DETAIL NO.
C-311	CITY OF CHANDLER STANDARD DETAIL	**REDUCED PRESSURE-PRINCIPLE BACKFLOW PREVENTION ASSEMBLY INSTALLATION - 3" AND UNDER**	APPROVED: CITY ENGINEER		**C-311**
NTS			DATE: 3/14/2013		NTS

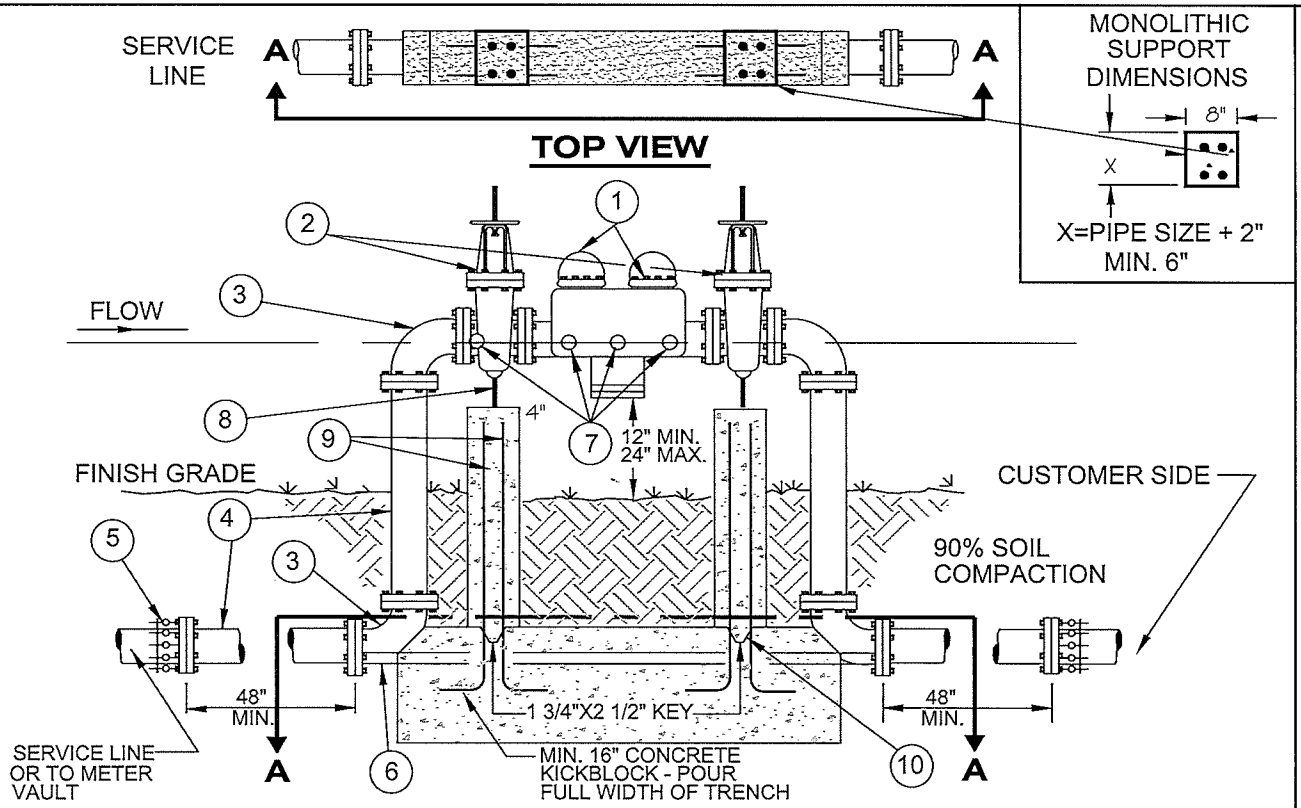

LIST OF MATERIALS

1. APPROVED REDUCED PRESSURE PRINCIPLE BACKFLOW PREVENTION ASSEMBLY.
2. O.S.&Y. GATE VALVE, N.R.S. GATE VALVE, IF PREFERRED.
3. 90° ELL. (FLANGED D.I.P.)
4. PIPE SPOOL (FLANGED D.I.P.)
5. FLANGED ADAPTER (WHEN REQUIRED).
6. 3/4" ZINC COATED THREADED ROD, BOLTED TO FLANGES AS SHOWN, BOTH SIDES TYPICAL EQUAL TENSION.
7. TEST COCKS (4 REQUIRED WITH BRASS PLUGS USING ONLY TEFLON TAPE.)
8. ADJUSTABLE PIPE SUPPORT MUST BE PERMANENTLY ATTACHED TO BASE, 6" MAXIMUM HEIGHT.
9. #6 REINFORCING STEEL, DEFORMED BAR, 4" APART, EVENLY SPACED.
10. CONSTRUCTION JOINT KEY TO BE 1 3/4" X 2 1/2".

NOTES:

1. LIST OF LATEST APPROVED ASSEMBLIES ON FILE AT ENGINEERING. COPIES AVAILABLE.
2. ASSEMBLY SHALL BE AS APPROVED BY UNIVERSITY OF SOUTHERN CALIFORNIA (USC) FOUNDATION FOR CROSS-CONNECTION CONTROL AND HYDRAULIC RESEARCH.
3. ABOVE GROUND PORTION OF ASSEMBLY TO BE PAINTED LIGHT TAN OR EQUIVALENT BACKGROUND COLOR.
4. WHEN UTILIZED FOR RECLAIMED WATER, THE WORDS 'RECLAIMED WATER' SHALL BE STENCILED ON THE ASSEMBLY USING THE COLOR 'SAFETY PURPLE'.
5. BACKFLOW PREVENTION ASSEMBLY SHALL BE LOCATED ON PRIVATE PROPERTY AND AS CLOSE AS PRACTICABLE TO THE POTABLE WATER METER.
6. BACKFLOW PREVENTION ASSEMBLY SHALL HAVE AT LEAST THE SAME CROSS-SECTIONAL AREA AS THE METER BUT NO MORE THAN ONE SIZE LARGER THAN THE METER.

SCREENING METHOD

1. SCREEN WALLS, PLANT MATERIAL, BERMING AND/OR BUILDING ORIENTATION SHALL BE SUBMITTED TO DEVELOPMENT SERVICES FOR REVIEW AND APPROVAL PRIOR TO START OF CONSTRUCTION.

DETAIL NO.				
C-315 NTS	CITY OF CHANDLER STANDARD DETAIL	**REDUCED PRESSURE PRINCIPLE BACKFLOW PREVENTION ASSEMBLY INSTALLATION - 4" AND LARGER**	APPROVED: CITY ENGINEER DATE: 1-14-16	DETAIL NO. **C-315** NTS

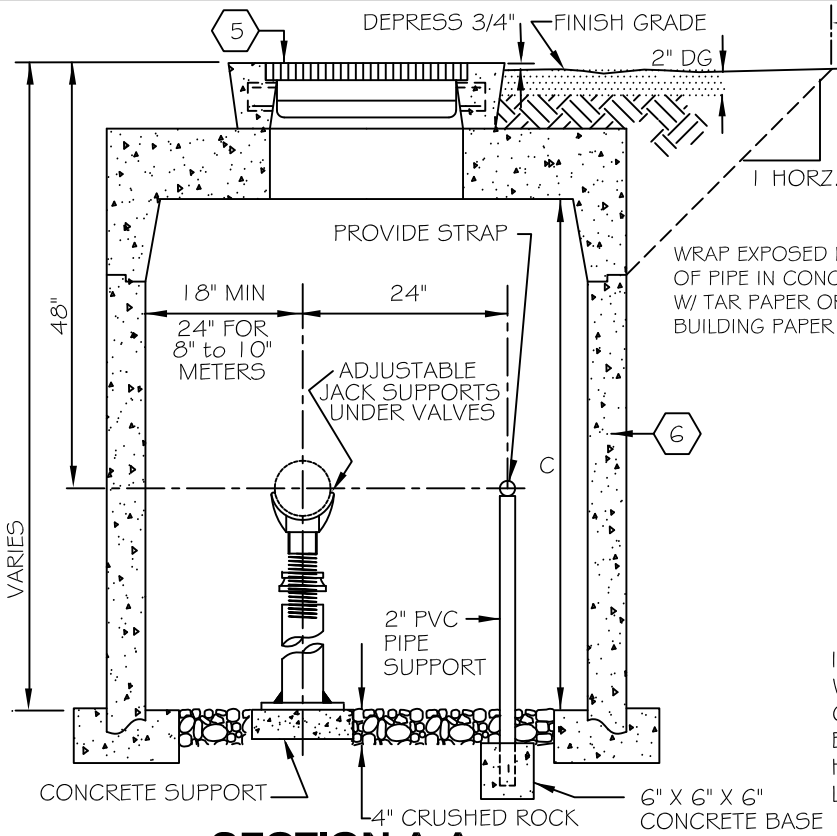

SECTION A-A

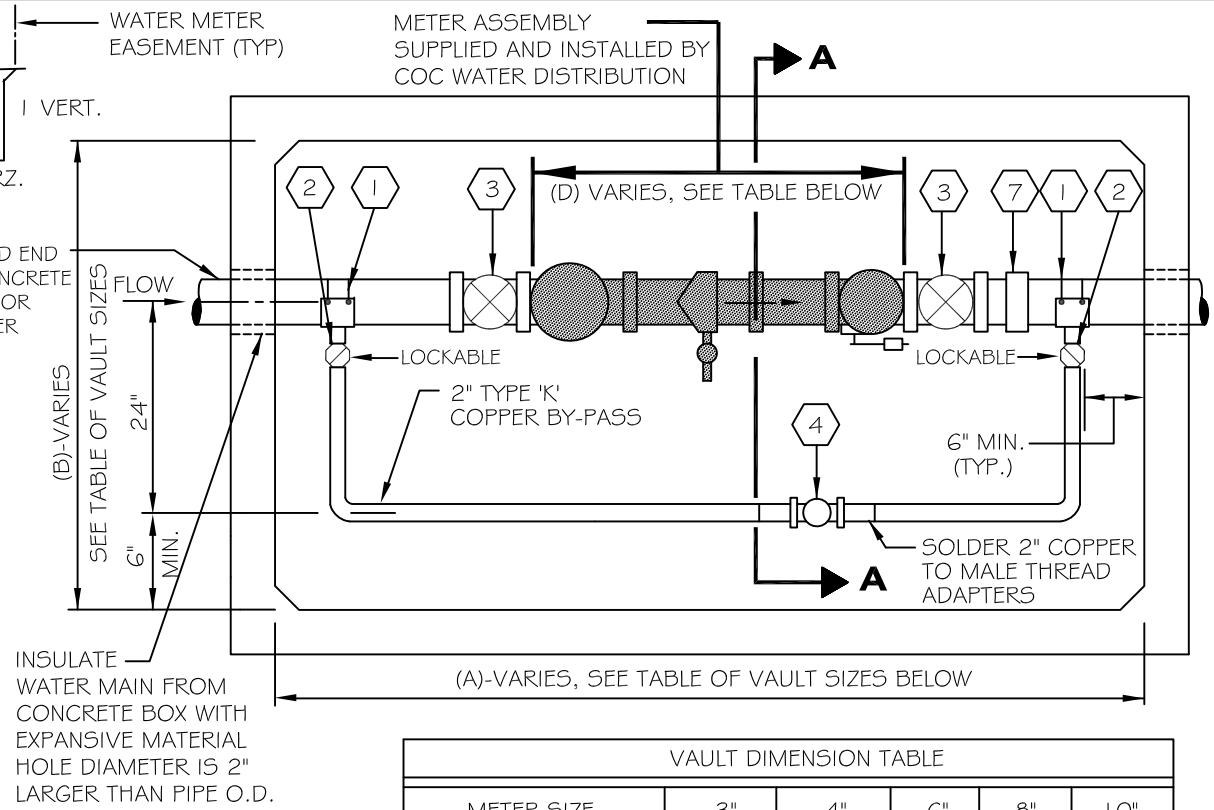

VAULT DIMENSION TABLE					
METER SIZE	3"	4"	6"	8"	10"
LENGTH (A)	8' - 4"	10' - 6"	12'	14'	15' - 0"
WIDTH (B)	4' - 4"	5'	5'	5' - 6 "	5' - 6"
INSIDE HEIGHT (C)	4' - 6"	5' - 0"	5' - 6"	6' - 0"	6' - 6"
METER ASSEMBLY (D) BLOCK OUT COMPOUND METER	3' - 8"	4' - 5"	6' - 8"	8' - 1"	10' - 0"
TURBINE METER	3' - 3"	3' - 11"	6' - 7"	7' -11"	9' - 0"

NOTES:

1. METER VAULTS MAY BE EITHER CAST-IN-PLACE OR PRE-CAST CONCRETE. SEE MAG STANDARD DETAIL 321 FOR VAULT CONSTRUCTION, 3" TO 6" METERS.
2. FOR LARGER THAN 6" METERS SPECIAL VAULT DESIGN IS REQUIRED. SUBMIT FOR APPROVAL.
3. STAINLESS BOLTS AND NUTS REQUIRED FOR ENTIRE ASSEMBLY.
4. PIPE MAIN MATERIAL SHALL BE D.I.P. THROUGHOUT VAULT AND 1' MIN. BEYOND INLET AND OUTLET.
5. PIPE MAIN SHALL BE FULLY RESTRAINED BEYOND INLET AND OUTLET OF VAULT.
6. CONTRACTOR SHALL PROVIDE FLANGED SPOOL IN METER ASSEMBLY BLOCK-OUT TO PROVE CORRECT ALIGNMENT. SPOOL MAY BE SALVAGED AFTER METER INSTALLATION.
7. VAULT LID SHALL NOT BE INSTALLED UNTIL AFTER METER IS INSTALLED BY CITY. CALL (480) 782-3700.

⬡ LEGEND:

1. DOUBLE STRAP ALL BRONZE SERVICE SADDLES.
2. 2" CORP STOP WITH BRONZE OR BRASS BODY, LOCKABLE, TO NORMALLY BE CLOSED.
3. O.S. & Y. GATE VALVE, FLANGED WITH HAND WHEEL OPEN LEFT, AND RISING STEM.
4. 2" BRONZE CHECK VALVE. (LOW ZINC)
5. METER HATCH PER EJ GROUP, INC. CLS2 STYLE PEDESTRIAN RATED ALUMINUM WITH SLAM LOCK OR APPROVED EQUAL. 3" & 4", 42" X 42", 6" THROUGH 10", 36" X 60". UPON APPROVAL FROM CITY, DRILL 1-3/4" HOLE(S) IN HATCH FOR METER TRANSMITTER(S).
6. METER VAULT PER OLD CASTLE PRECAST COC STANDARD DRAWINGS OR APPROVED EQUAL.
7. PROVIDE 1" TO 1-1/2" OF PLAY IN THE FLEX COUPLING - CAULDER OR EQUAL.

DETAIL NO.					DETAIL NO.
C-316	CITY OF CHANDLER STANDARD DETAIL	**3" TO 10" METER VAULT**	APPROVED: CITY ENGINEER		**C-316**
NTS			DATE: 01-09-2020		NTS

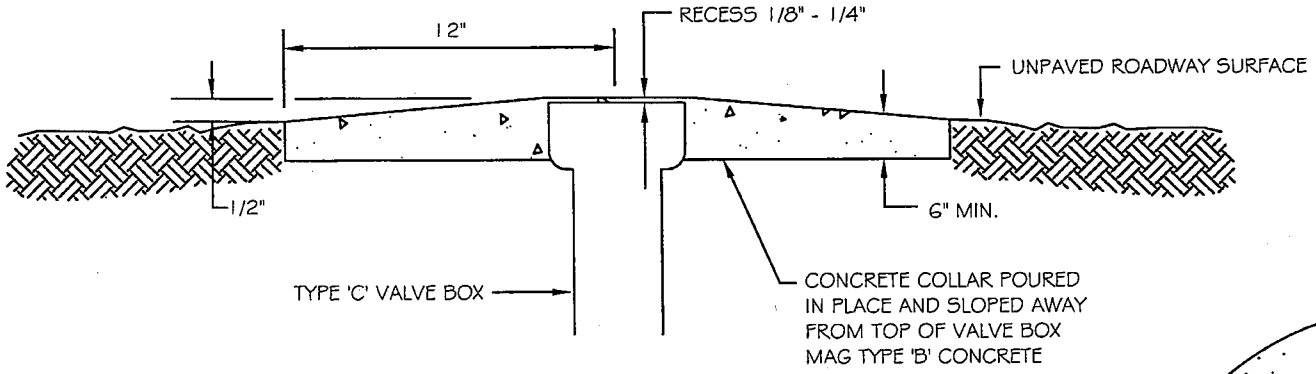

SIDE VIEW

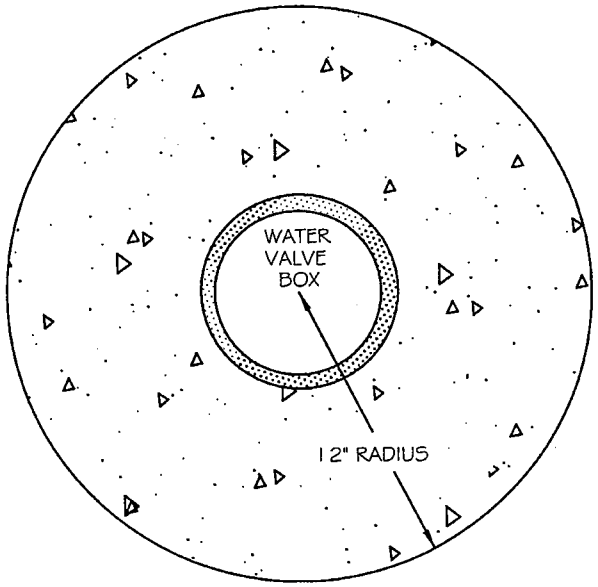

TOP VIEW

C-317 **REPLACES** **52**	CITY OF CHANDLER STANDARD DETAIL	**CONCRETE COLLAR DETAIL** **WATER VALVE BOX PLACEMENT** **UNPAVED AREAS**	APPROVED: Elizabeth Burks CITY ENGINEER DATE: January 11, 2002	DETAIL NO. **C-317** NTS

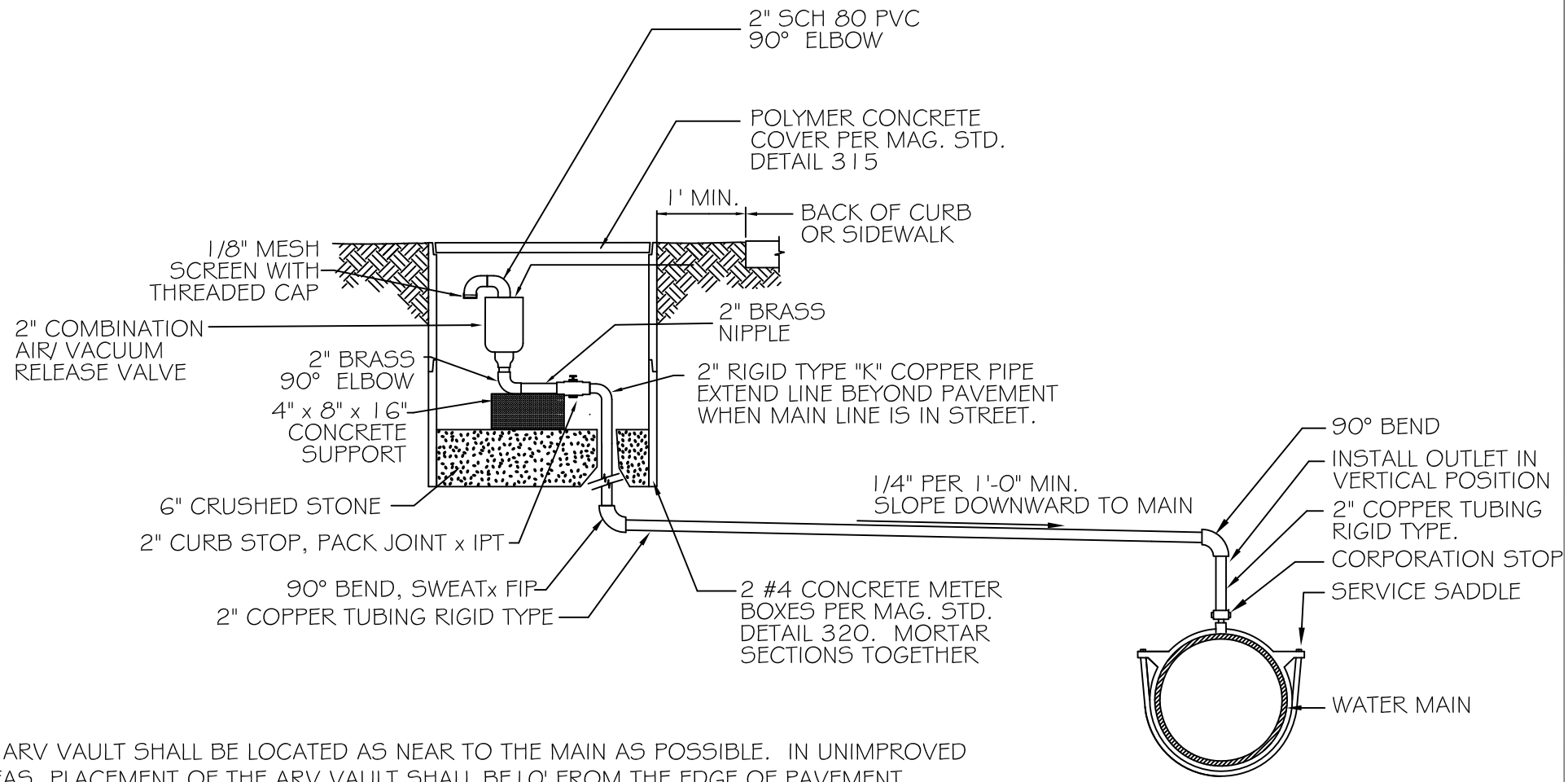

NOTES

1. THE ARV VAULT SHALL BE LOCATED AS NEAR TO THE MAIN AS POSSIBLE. IN UNIMPROVED AREAS, PLACEMENT OF THE ARV VAULT SHALL BE 10' FROM THE EDGE OF PAVEMENT.
2. FOR RECLAIMED WATER APPLICATIONS, THE PIPE SHALL BE PAINTED PURPLE (PANTONE 512). POTABLE WATER SHALL BE PAINTED BLUE.
3. AIR RELEASE/VACUUM VALVE SHALL BE PER CITY LIST OF APPROVED PRODUCTS.
4. TO BE USED ONLY ON 16" AND SMALLER WATER MAINS.
5. SHALL NOT BE PLACED IN LOW AREAS WHERE WATER MAY COLLECT.

DETAIL NO.					DETAIL NO.
C-319	CITY OF CHANDLER STANDARD DETAIL	**2" COMBINATION AIR/VACUUM VALVE ASSEMBLY**	APPROVED: CITY ENGINEER		**C-319**
NTS			DATE: 01-09-2020		NTS

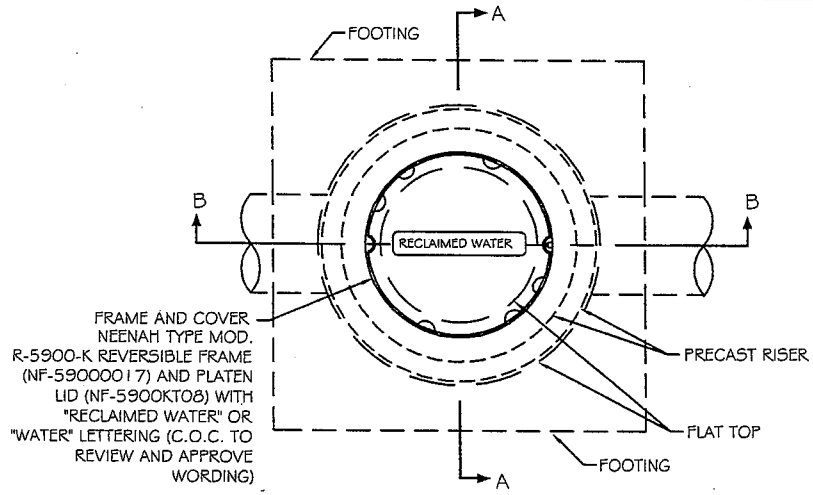

PLAN

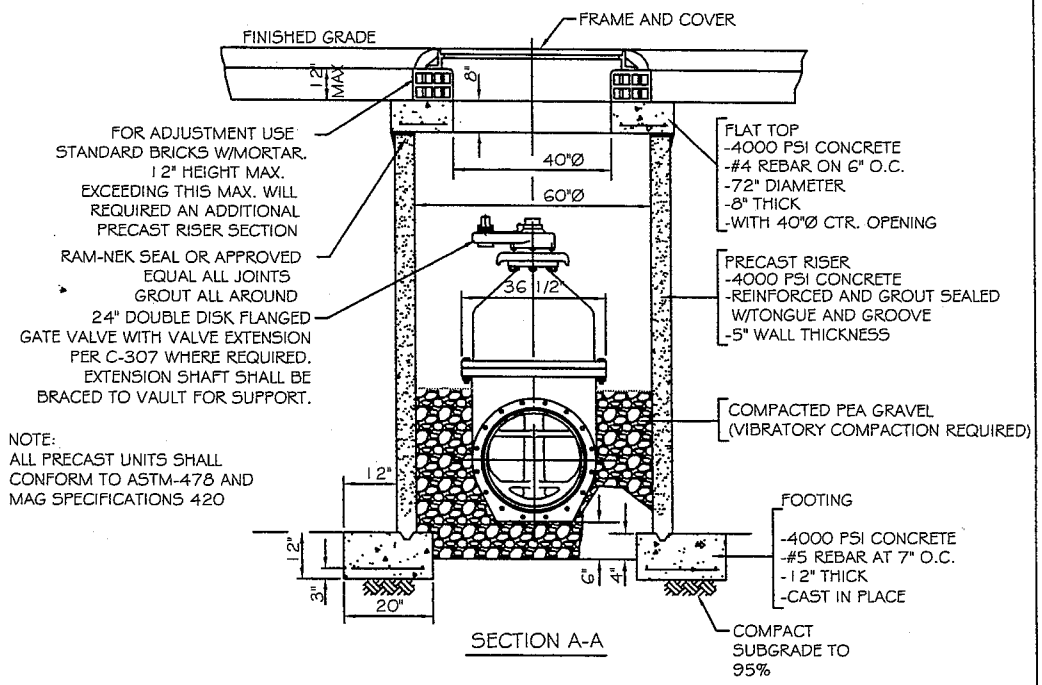

NOTE:
ALL PRECAST UNITS SHALL
CONFORM TO ASTM-478 AND
MAG SPECIFICATIONS 420

SECTION A-A

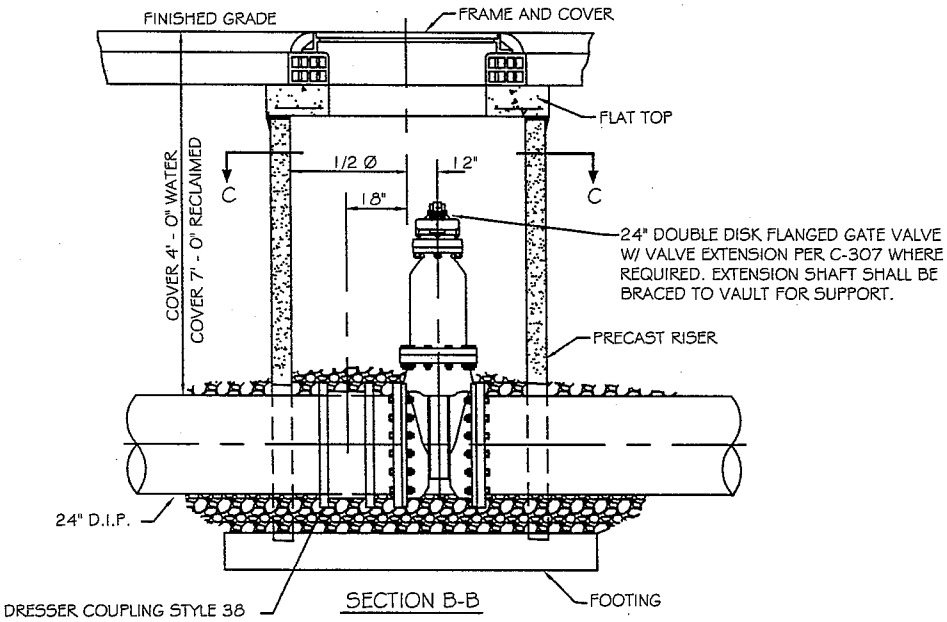

SECTION B-B

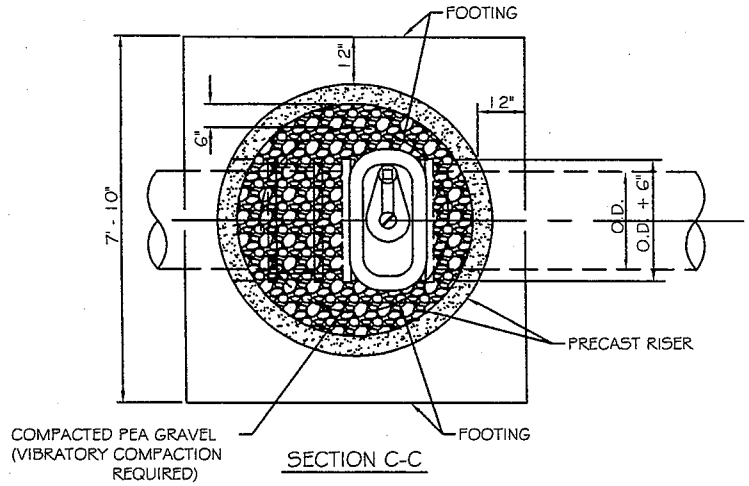

SECTION C-C

DETAIL NO.					DETAIL NO.
C-320	CITY OF CHANDLER STANDARD DETAIL	**VAULT FOR 24" GATE VALVE**	APPROVED: CITY ENGINEER		**C-320**
NTS			DATE: 01/14/10		NTS

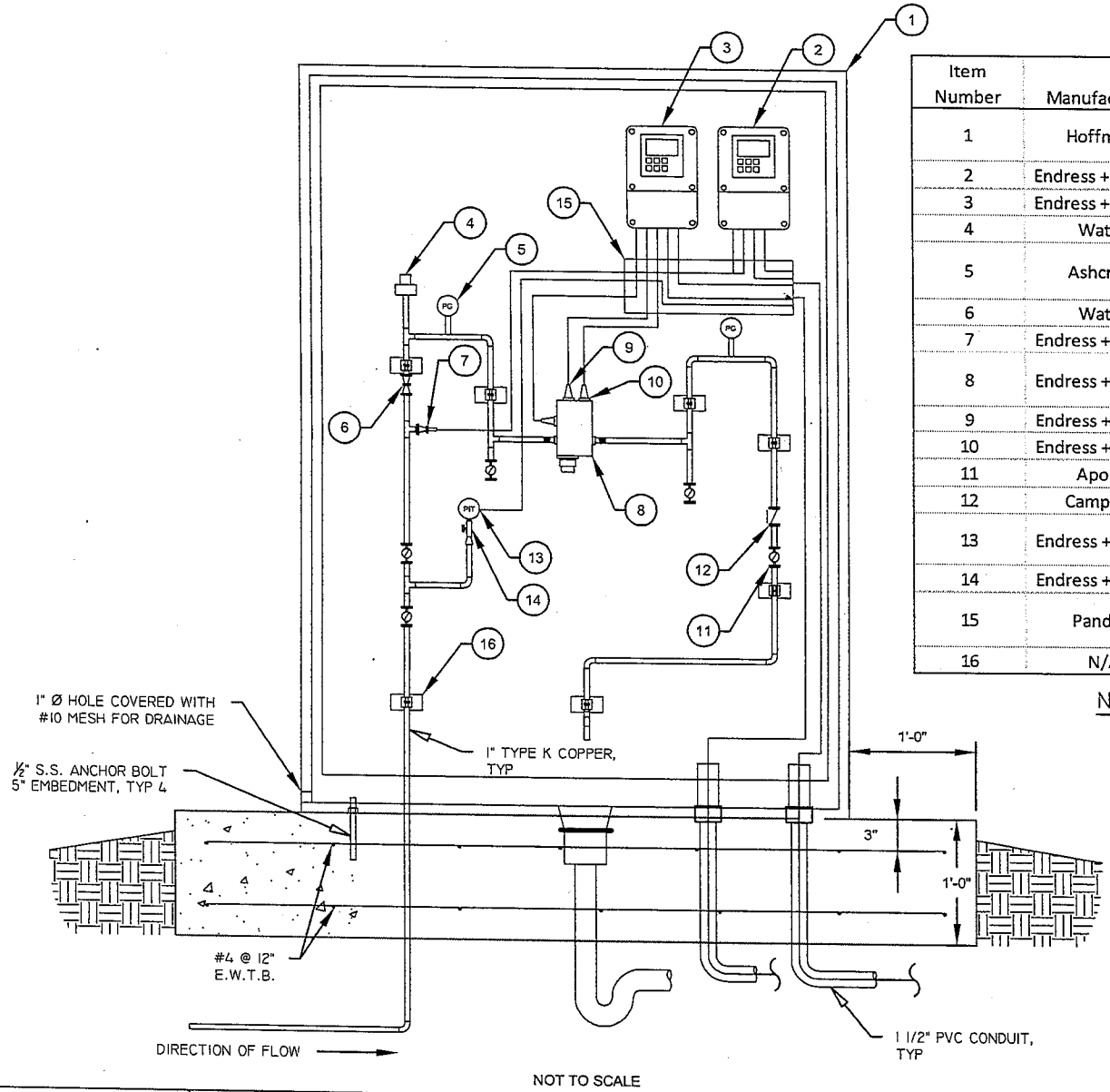

NOT TO SCALE

Item Number	Manufacturer	Model Number	Description
1	Hoffman	A724818SSFSDN4	60"H x 36"W x 24"D NEMA 4X Enclosure, Stainless Steel w/ 3pt latch
2	Endress + Hauser	CCM253	pH and Chlorine Analyzer
3	Endress + Hauser	CLM253	Conductivity and Temperature Analyzer
4	Watts	FV-4M1	1" Automatic Air Vent Valve
5	Ashcroft	25-1009SW02L 100#	Pressure Gage, Stainless Steel, 2 1/2" dial, 100 psi
6	Watts	123LP	1" Pressure Reducing Valve
7	Endress + Hauser	CLS21-C3B2A	Conductivity and Temperature Sensor
8	Endress + Hauser	CCA250-A1	Flow Assembly for Chlorine and pH/ORP Sensors
9	Endress + Hauser	CPS11-2BA2ESA	pH Sensor
10	Endress + Hauser	CCS140-N	Chlorine Sensor
11	Apollo	7010501	1" Bronze Ball Valve, Standard Port
12	Campbell	CV-4T	1" Brass Check Valve
13	Endress + Hauser	PMC71-AAC1S6RDAAA1	Pressure Transmitter
14	Endress + Hauser	2VM-SS-8-RM	1/2" Stainless Steel Block and Bleed
15	Panduit	F2x2LG6C2LG6	2" x 2" Wireway, narrow slot, gray w/ cover
16	N/A	N/A	Non-metallic pipe clamp and offset

NOTES

1. INFLUENT SERVICE SHALL BE WATER TAP PER C-301.
2. EFFLUENT SHALL DISCHARGE VIA 4" AIR GAP TO 2" FLOOR DRAIN CONNECTED TO SEWER PER C-411.
3. FLOOR DRAIN SHALL BE INSTALLED WITH TRAP SEAL. BOTTOM OF CABINET SHALL BE CUT OUT TO EXPOSE.

DETAIL NO. **C-321** NTS	CITY OF CHANDLER STANDARD DETAIL	**WATER QUALITY MONITORING STATION**	APPROVED: CITY ENGINEER DATE: 01-27-11	DETAIL NO. **C-321** NTS

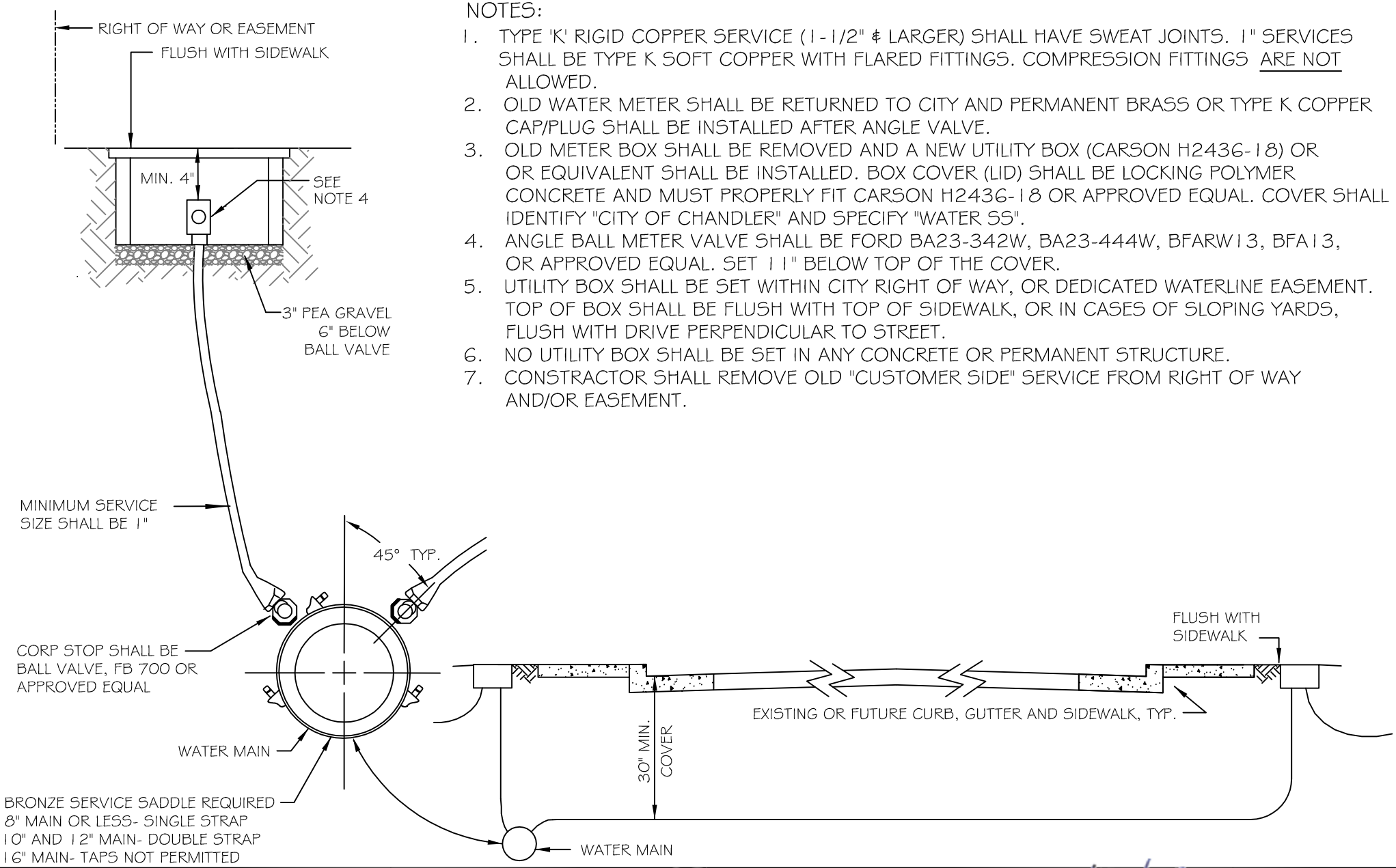

NOTES:

1. TYPE 'K' RIGID COPPER SERVICE (1-1/2" & LARGER) SHALL HAVE SWEAT JOINTS. 1" SERVICES SHALL BE TYPE K SOFT COPPER WITH FLARED FITTINGS. COMPRESSION FITTINGS ARE NOT ALLOWED.
2. OLD WATER METER SHALL BE RETURNED TO CITY AND PERMANENT BRASS OR TYPE K COPPER CAP/PLUG SHALL BE INSTALLED AFTER ANGLE VALVE.
3. OLD METER BOX SHALL BE REMOVED AND A NEW UTILITY BOX (CARSON H2436-18) OR OR EQUIVALENT SHALL BE INSTALLED. BOX COVER (LID) SHALL BE LOCKING POLYMER CONCRETE AND MUST PROPERLY FIT CARSON H2436-18 OR APPROVED EQUAL. COVER SHALL IDENTIFY "CITY OF CHANDLER" AND SPECIFY "WATER SS".
4. ANGLE BALL METER VALVE SHALL BE FORD BA23-342W, BA23-444W, BFARW13, BFA13, OR APPROVED EQUAL. SET 11" BELOW TOP OF THE COVER.
5. UTILITY BOX SHALL BE SET WITHIN CITY RIGHT OF WAY, OR DEDICATED WATERLINE EASEMENT. TOP OF BOX SHALL BE FLUSH WITH TOP OF SIDEWALK, OR IN CASES OF SLOPING YARDS, FLUSH WITH DRIVE PERPENDICULAR TO STREET.
6. NO UTILITY BOX SHALL BE SET IN ANY CONCRETE OR PERMANENT STRUCTURE.
7. CONSTRACTOR SHALL REMOVE OLD "CUSTOMER SIDE" SERVICE FROM RIGHT OF WAY AND/OR EASEMENT.

DETAIL NO.					DETAIL NO.
C-322	CITY OF CHANDLER STANDARD DETAIL	**POTABLE WATER METER SAMPLING STATION CONVERSION**	APPROVED: CITY ENGINEER		**C-322**
NTS			DATE: 3/14/2013		NTS

WASTEWATER
C-400 TO C-417

TYPE 'A'

CAST-IRON

TYPE 'B'

CORROSION-PROTECTIVE COMPOSITE

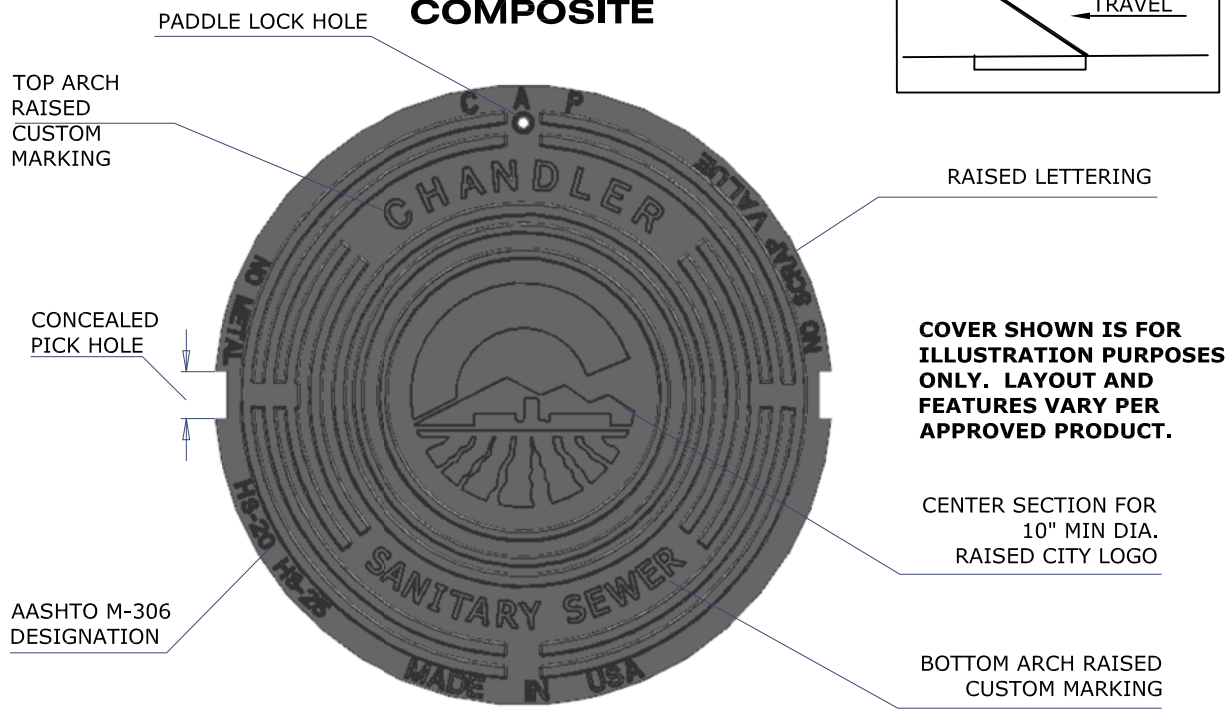

HINGED FRAME AND COVERS SHALL BE ADJUSTED SO THAT COVER OPENS AS SHOWN BELOW.

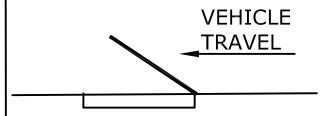

COVER SHOWN IS FOR ILLUSTRATION PURPOSES ONLY. LAYOUT AND FEATURES VARY PER APPROVED PRODUCT.

NOTE:

1. FRAME AND COVER SHALL CONFORM TO MAG STD DTL 423 & 424 FOR TYPE 'A' OR CITY LIST OF APPROVED PRODUCTS FOR TYPE 'B' .
2. DELETE BEADS ON MAG STD. DTL WHICH CONFLICT WITH LOGO SHOWN.
3. LETTERING ON MANHOLE COVER SHALL CONTAIN UTILITY FOR WHICH MANHOLE IS NEEDED, ("CHANDLER SANITARY SEWER" OR, "CHANDLER STORM SEWER"), OR AS DIRECTED.
4. THE TOTAL WIDTH OF INDIVIDUAL LETTERS SHALL BE SUCH THAT LETTERS AND WORDS ARE EQUALLY SPACED AND SHALL BE BALANCED TO FORM A COMPLETE CIRCLE WITH SPACES BEFORE AND AFTER THE WORD.
5. LETTERS SHALL BE 1 1/2" MIN IN HEIGHT AND RAISED 1/8" ABOVE LEVEL OF COVER.
6. TYPE OF LETTERS SHALL BE SUBMITTED FOR APPROVAL.

DETAIL NO.					
C-400	CITY OF CHANDLER STANDARD DETAIL	**MANHOLE FRAME AND COVER TYPES**	APPROVED: CITY ENGINEER DATE: 01-09-2020	DETAIL NO. **C-400**

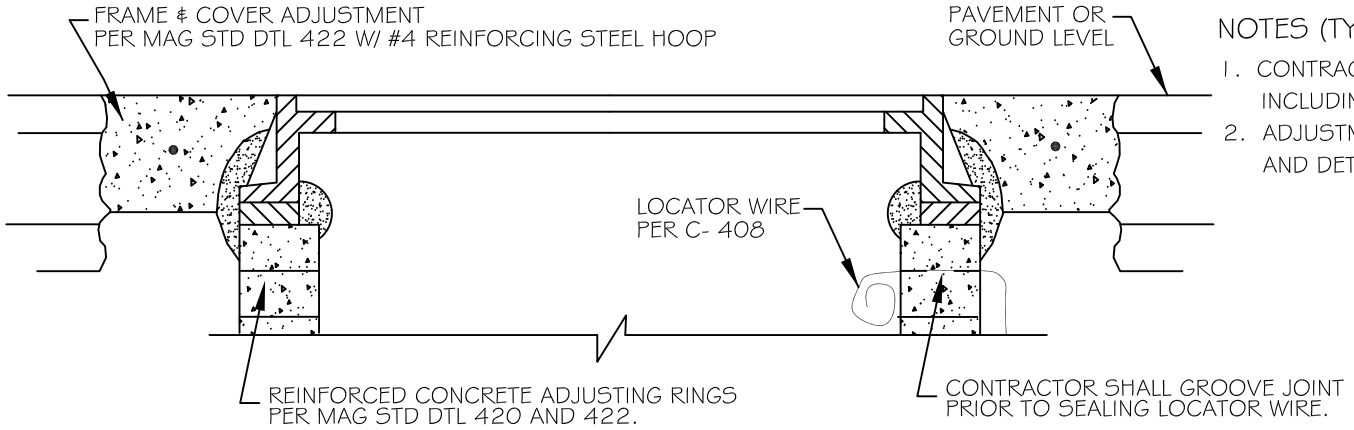

TYPE 'A'
CONCRETE RINGS

NOTES (TYPE 'A'):

1. CONTRACTOR SHALL ADJUST ALL MANHOLE FRAME AND COVERS, INCLUDING MANHOLES OUTSIDE OF PAVEMENT.
2. ADJUSTMENT SHALL BE IN ACCORDANCE WITH MAG SECTION 345 AND DETAILS 420 AND 422.

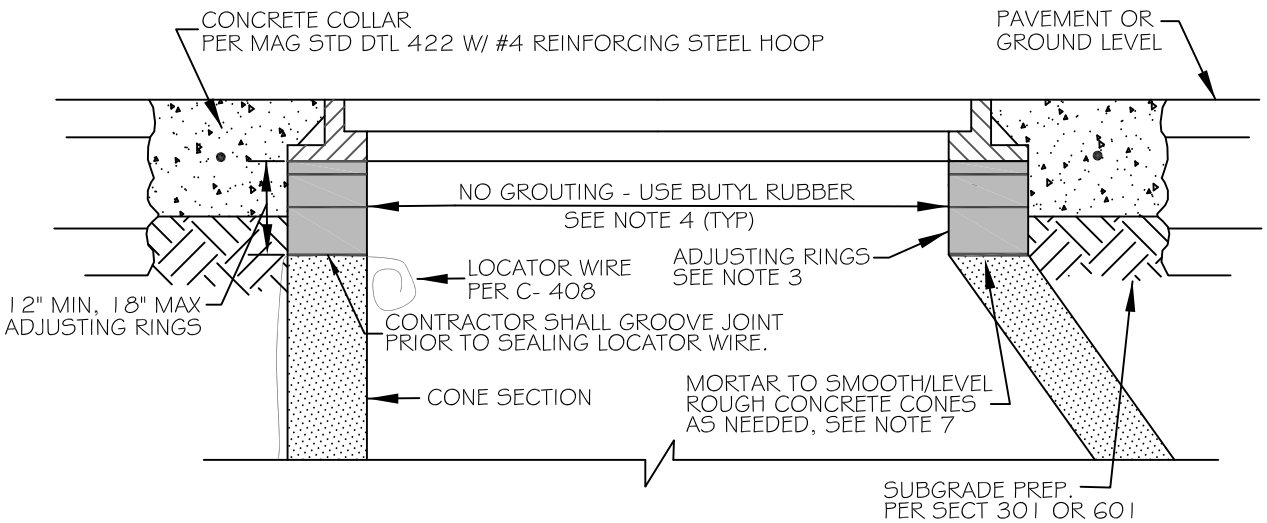

TYPE 'B'
CORROSION-PROTECTIVE RINGS

NOTES (TYPE 'B'):

1. CONTRACTOR SHALL ADJUST ALL MANHOLE FRAME AND COVERS, INCLUDING MANHOLES OUTSIDE OF PAVEMENT.
2. ADJUSTMENT SHALL BE IN ACCORDANCE WITH MAG SECTION 345 AND CITY SUPPLEMENTS.
3. ADJUSTMENT RINGS PER CITY LIST OF APPROVED PRODUCTS. USE ONLY APPROVED FLAT OR SLOPED SPACER RINGS AS REQUIRED. NO OTHER SPACERS OF ANY KIND ALLOWED INCLUDING GROUT, ROCKS, STICKS, WOOD SHIMS, BRICK ETC.
4. INSTALLATION SHALL BE IN ACCORDANCE WITH MANUFACTURER'S RECOMMENDATION WITH A $\frac{3}{8}$" DIAM. (OR $\frac{1}{2}$" SQ) BUTYL RUBBER MASTIC ROPE (OR APPROVED EQUAL) INSTALLED BETWEEN EACH OF THE RINGS, THE CONE AND THE BOTTOM RING, AND FRAME & COVER AND TOP RING.
5. ADJUSTMENT RING PRODUCTS SHALL NOT BE MIXED IN SAME MH.
6. CARE SHALL BE TAKEN TO ENSURE NO SHIFTING OF RINGS, AND FRAME & COVER OCCURS WITH BACKFILLING.
7. CORROSION PROTECTIVE COATING PER CITY LIST OF APPROVED PRODUCTS SHALL BE APPLIED TO ALL EXPOSED MORTAR AS REQUIRED PER TDM 1 & 2.

HINGED FRAME AND COVERS SHALL BE ADJUSTED SO THAT COVER OPENS AS SHOWN.

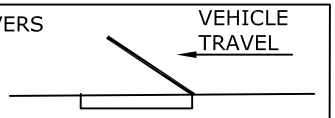

DETAIL NO.					DETAIL NO.
C-401	CITY OF CHANDLER STANDARD DETAIL	**MANHOLE CONCRETE COLLAR AND ADJUSTMENT TYPES**	APPROVED: CITY ENGINEER		**C-401**
NTS			DATE: 01-09-2020		NTS

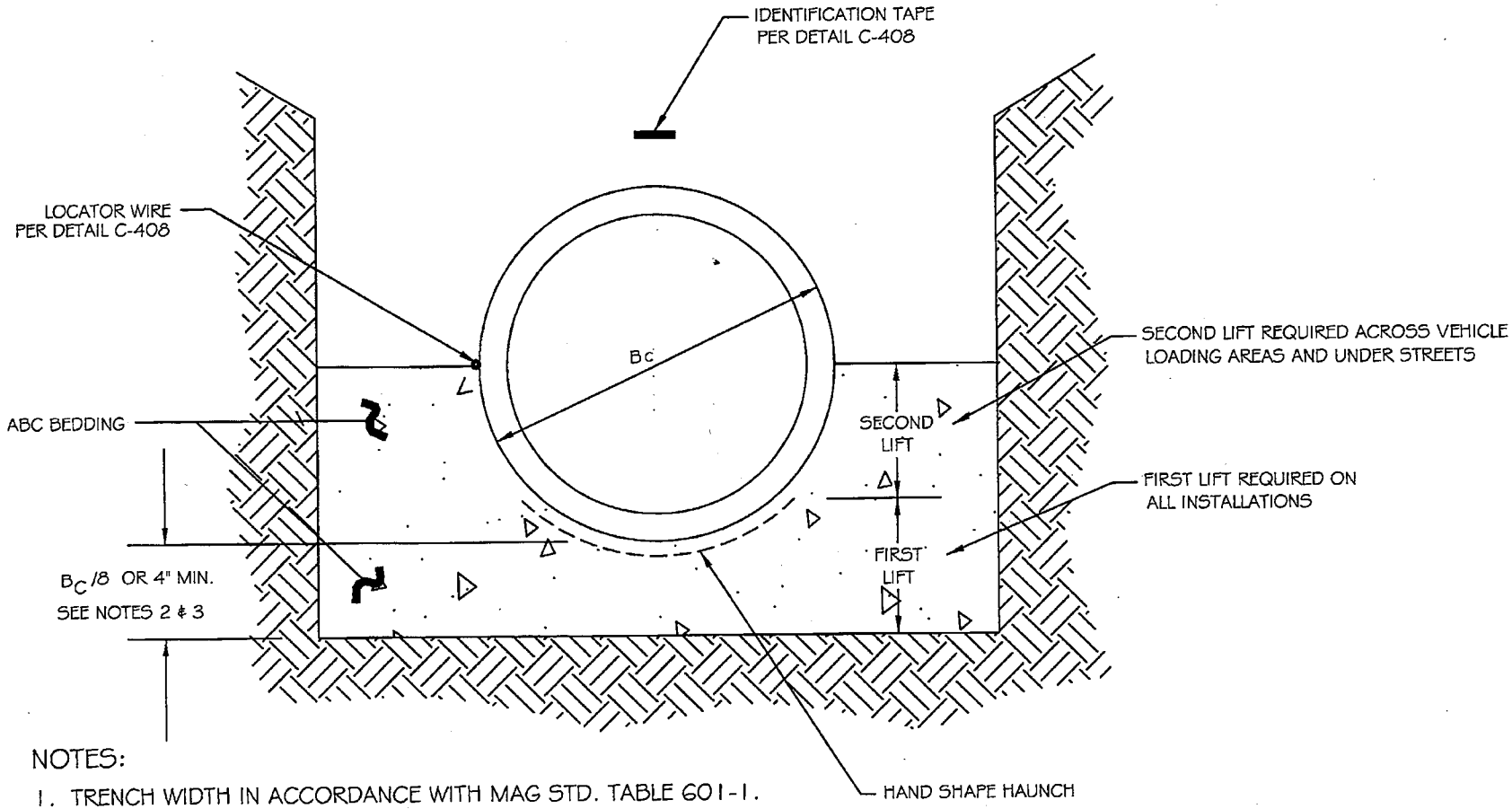

NOTES:

1. TRENCH WIDTH IN ACCORDANCE WITH MAG STD. TABLE 601-1.
2. MINIMUM 4" FOR PIPES 12" OR SMALLER.
3. MINIMUM 6" FOR PIPES LARGER THAN 12".
4. SEWER PIPE SHALL BE EXTRA-STRENGTH VITRIFIED CLAY PIPE PER MAG SPEC 743. PVC PER MAG SPEC 745 IS PERMITTED AT DEPTHS OF COVER LESS THAN 10'. SOILS INVESTIGATION, TRENCH DETAIL, STRUCTURAL ANALYSIS, AND CITY ENGINEER'S APPROVAL IS REQUIRED FOR PERMITTING PVC PIPE AT GREATER THAN 10' COVER.

DETAIL NO.					DETAIL NO.
C-402	CITY OF CHANDLER STANDARD DETAIL	**SEWER PIPE BEDDING DETAIL**	APPROVED: CITY ENGINEER		**C-402**
NTS			DATE: 01/06/09		NTS

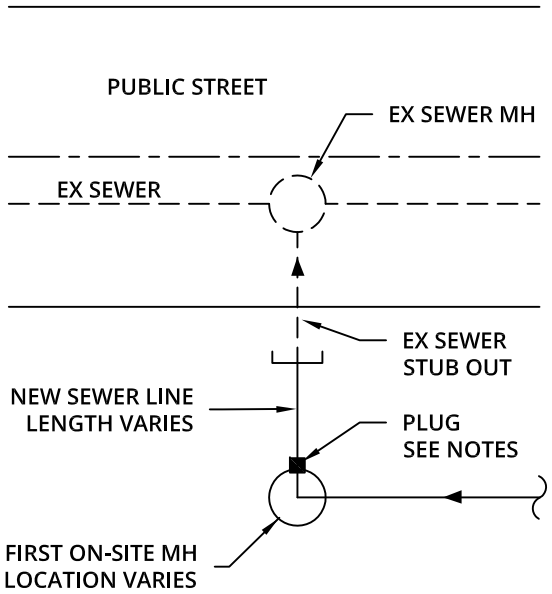

STUB OUT (OR PHASED) CONNECTION

1. NEW SEWER AND STUB OUT LINE TO THE EXISTING MANHOLE SHALL BE VACTORED AFTER CONNECTIONS ARE COMPLETE AND PLUG SHALL BE IMMEDIATELY INSTALLED.
2. PLUG MAY ONLY BE REMOVED AFTER PASSING ALL REQUIRED TESTING (PRESSURE, MANDREL AND CCTV), AND WITH APPROVAL OF THE CITY INSPECTOR.
3. LINES SHALL BE VACTORED PRIOR TO REQUESTING CCTV INSPECTION, AND WITH CITY INSPECTOR PRESENT, A SUFFICIENT VOLUME OF WATER SHALL BE ADDED TO THE SYSTEM FOR CCTV INSPECTION.
4. PLUG SHALL BE IMMEDIATELY REINSTALLED AFTER COMPLETION OF CCTV INSPECTION OR DAILY IF INSPECTION SPANS MULTIPLE DAYS.

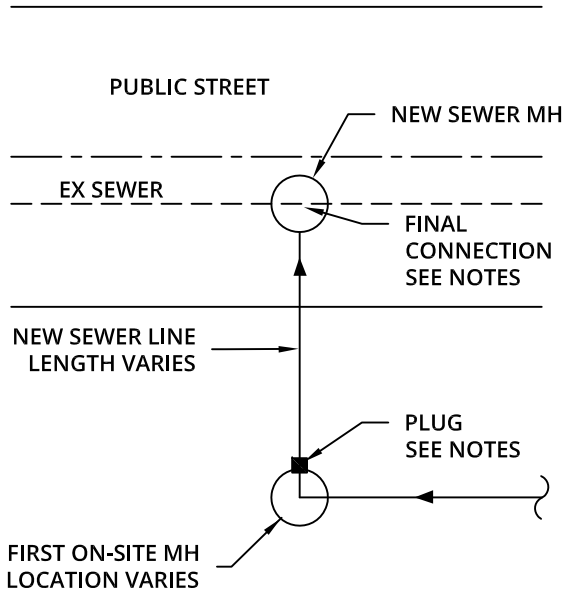

NEW MH (IN PUBLIC STREET) CONNECTION

1. NEW SEWER LINE TO THE NEW MANHOLE SHALL BE VACTORED AFTER CONNECTIONS ARE COMPLETE AND PLUG SHALL BE IMMEDIATELY INSTALLED.

< SAME NOTES (2-4) APPLY

5. FINAL CONNECTION IN NEW MANHOLE SHALL OCCUR NEAR PROJECT COMPLETION AND EXISTING SEWER LINE WITHIN MANHOLE REMAINS FULLY INTACT. WHEN ALL TESTING HAS BEEN COMPLETED AND ACCEPTED BY THE CITY, TOP HALF OF PIPE IS REMOVED AND CHANNEL(S) ARE TO BE FORMED. SEE DETAIL A.

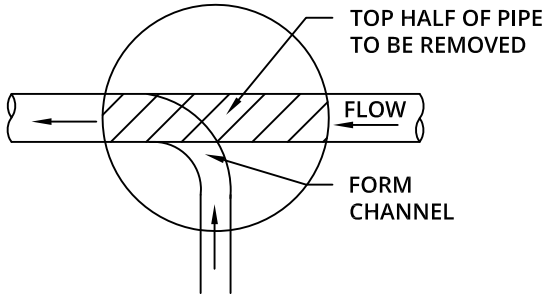

DETAIL A

GENERAL NOTES:

1. PLUGS SHALL BE INSTALLED AS SHOWN TO PROTECT THE CITY SANITARY SYSTEM.
2. PLUGS SHALL REMAIN IN PLACE UNTIL ALL TESTING HAS BEEN COMPLETED AND ACCEPTED BY THE CITY.
3. MECHANICAL OR PNEUMATIC PLUGS MAY BE USED AND INSTALLED TO ACHIEVE A WATER TIGHT SEAL.
4. CCTV TESTING SHALL BE IN ACCORDANCE WITH MAG SECTION 611 AND CITY PROCESS.
5. ALL OTHER CONSTRUCTION AND TESTING TO BE IN ACCORDANCE WITH MAG AND CITY SUPPLEMENTS.
6. THE CONTRACTOR SHALL UNCOVER ALL EXISTING CITY UTILITY LINES BEING TIED INTO TO VERIFY THEIR TYPE, CONDITION, LOCATION, INVERT, SLOPE, AND ANY OTHER INFORMATION NEEDED TO DETERMINE THAT THE UTILITY CONNECTION WILL FUNCTION AS DESIGNED. THE CONTRACTOR IS RESPONSIBLE FOR MAKING ANY REPAIRS NECESSARY TO THE LATERAL OR MAIN LINES OF THE CITY SYSTEM NECESSARY FOR THE CONNECTION TO FUNCTION AS DESIGNED. THE CONTRACTOR SHALL LOCATE OR HAVE LOCATED ALL EXISTING UNDERGROUND PRIVATE UTILITIES (ELECTRIC, TELEPHONE, PIPELINES, ETC.) AND STRUCTURES IN ADVANCE OF CONSTRUCTION AND SHALL ELIMINATE ALL CONFLICTS PRIOR TO START OF CONSTRUCTION. BLUE STAKE TELEPHONE (602) 263-1100.

DETAIL NO.					DETAIL NO.
C-403	CITY OF CHANDLER STANDARD DETAIL	SEWER CONNECTIONS	APPROVED: CITY ENGINEER		C-403
NTS			DATE: 01-09-2020		NTS

RECLAIMED WATER SERVICE CONNECTIONS SIZING TABLE

SERVICE CONNECTION FLOW RATE (GPM)	IRRIGATION SERVICE LINE SIZE (AFTER PUMP)	RECLAIMED WATER SERVICE CONNECTION LINE SIZE (FROM MAIN TO PUMP)	WET WELL PUMP SEE PAGES:	CAN PUMP SEE PAGES:
UP TO 80	2"	4"	PAGE 3	-
80 TO 70	3"	4"	PAGE 4	-
170 TO 300	4"	6"	PAGES 5 & 6	PAGES 9 & 10
300 TO 700	6"	8"	PAGES 7 & 8	PAGES 11 & 12

NOTES:

1. THE DATA FORM ON DETAIL C-404 PAGE 2 MUST BE COMPLETED AND SUBMITTED WITH THE BUILDING PERMIT APPLICATION FOR THE INLINE PUMP AND CAN PUMP SERVICE CONNECTIONS.

2. THESE RECLAIMED WATER SERVICE CONNECTION DETAILS PRESENT THE MINIMUM REQUIREMENTS TO ENSURE THE INTEGRITY OF THE CITY OF CHANDLER'S RECLAIMED WATER DISTRIBUTION SYSTEM. ALL RECLAIMED WATER SERVICE CONNECTIONS MUST BE DESIGNED IN ACCORDANCE WITH THESE DETAILS AND THE SITE-SPECIFIC REQUIREMENTS INCLUDING: THE GROUND ELEVATION, IRRIGATION SYSTEM FLOW REQUIREMENTS, AND IRRIGATION SYSTEM PRESSURE REQUIREMENTS.

3. ALL RECLAIMED WATER SERVICE CONNECTIONS SHALL BE DESIGNED IN ACCORDANCE WITH MARICOPA COUNTY ENVIRONMENTAL SERVICES DEPARTMENT (MCESD) AND ARIZONA DEPARTMENT OF ENVIRONMENTAL QUALITY (ADEQ) REQUIREMENTS.

4. AN APPROVAL TO CONSTRUCT PERMIT FROM MCESD IS REQUIRED FOR ALL RECLAIMED WATER SERVICE CONNECTIONS PRIOR TO CONSTRUCTION. A COPY OF THE APPROVAL OF CONSTRUCTION FROM MCDES MUST BE SUBMITTED TO THE CITY OF CHANDLER PRIOR TO PLACING THE RECLAIMED WATER SERVICE CONNECTION IN SERVICE.

5. ALL ABOVE GROUND PIPING SHALL BE PAINTED PURPLE OR STENCILED IN ACCORDANCE WITH MARICOPA ASSOCIATION OF GOVERNMENTS (MAG) STANDARDS SECTION 616.4.2.

DEVELOPER: _____

TURNOUT ADDRESS: _____

FLOW RATE CRITERIA

ANNUAL AVERAGE _____ ACRE FT/YEAR

MAXIMUM MONTH _____ ACRE FT

INSTANTANEOUS _____ GPM

SUCTION HEAD CALCULATION

1. LENGTH AND DIAMETER OF PIPING FROM NEAREST RECLAIMED WATER TRANSMISSION MAIN (RWTM) TO TURNOUT _____

2. FRICTION LOSSES IN PIPING FROM RWTM TO TURNOUT AT INSTANTANEOUS FLOW RATE _____ FEET

3. HGL IN RWTM 1330 TO 1345 FEET

4. HGL AT TURNOUT (HGL OF RWTM LESS FRICTION LOSSES CALCULATED ABOVE) _____ TO _____ FEET

5. ELEVATION AT TURNOUT _____ FEET

6. SUCTION PRESSURE AT TURNOUT _____ TO _____ PSI

7. PUMP TDH _____ FEET

8. DISCHARGE PRESSURE _____ PSI

DETAIL NO. **C-404** PAGE 2 OF 14	CITY OF CHANDLER STANDARD DETAIL	**RECLAIMED WATER SERVICE CONNECTION DATA FORM**	APPROVED: _____ CITY ENGINEER DATE: June 12/08	DETAIL NO. **C-404** PAGE 2 OF 12

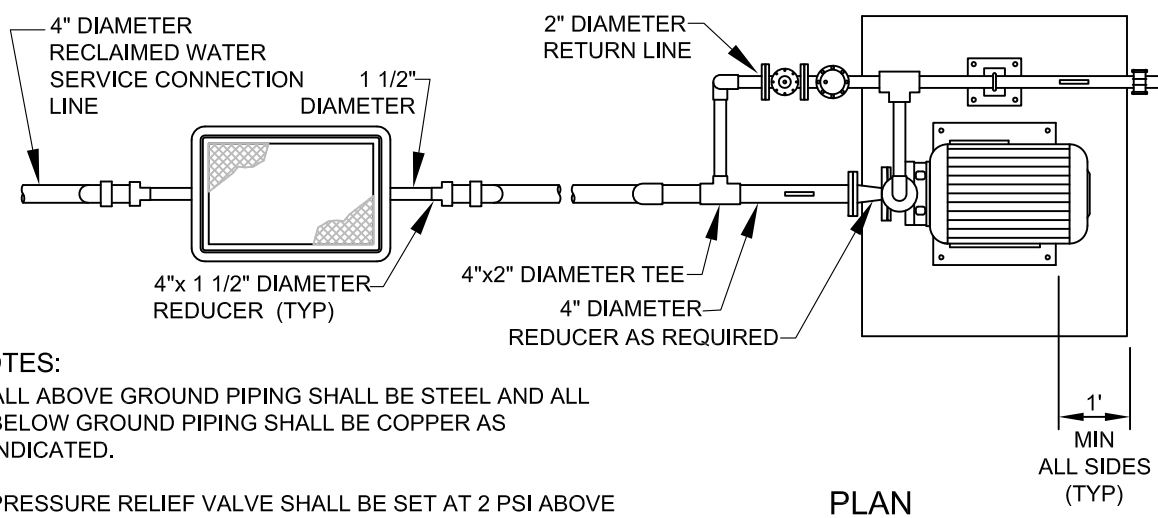

PLAN

1. PRESSURE RELIEF VALVE: CLA VAL MODEL 50-01 OR APPROVED EQUAL
2. SILENT CHECK VALVE: APCO SERIES 600 OR APPROVED EQUAL
3. MOTORIZED BUTTERFLY VALVE: WATTS MODEL BF-03 WITH ACTUATOR MODEL ER350 OR APPROVED EQUAL
4. SPLIT CASE CENTRIFUGAL PUMP
5. PUMP CONCRETE SUPPORT PAD
6. 1/2" THREADED OUTLET, BALL VALVE, SS DIAPHRAGM, AND ASHCROFT TYPE 1009 PRESSURE GAUGE (0-150 PSI) OR APPROVED EQUAL
7. PIPE SUPPORT: B-LINE FIGURE B3088T, B3089, AND B3090 OR APPROVED EQUAL
8. AIR RELEASE VALVE: APCO MODEL 50 WITH 1/2" THREADED INLET OR APPROVED EQUAL

NOTES:

1. ALL ABOVE GROUND PIPING SHALL BE STEEL AND ALL BELOW GROUND PIPING SHALL BE COPPER AS INDICATED.
2. PRESSURE RELIEF VALVE SHALL BE SET AT 2 PSI ABOVE SPRINKLER DESIGN PRESSURE.
3. DEVELOPER SHALL PROVIDE UTILITY SERVICES TO THE FACILITY AS REQUIRED.
4. DEVELOPER MAY USE VARIABLE FREQUENCY DRIVE WITH PUMP IN LIEU OF RETURN LINE.
5. DEVELOPER SHALL INTERLOCK MOTORIZED BUTTERFLY VALVE TO OPEN/CLOSE ON PUMP START/STOP.

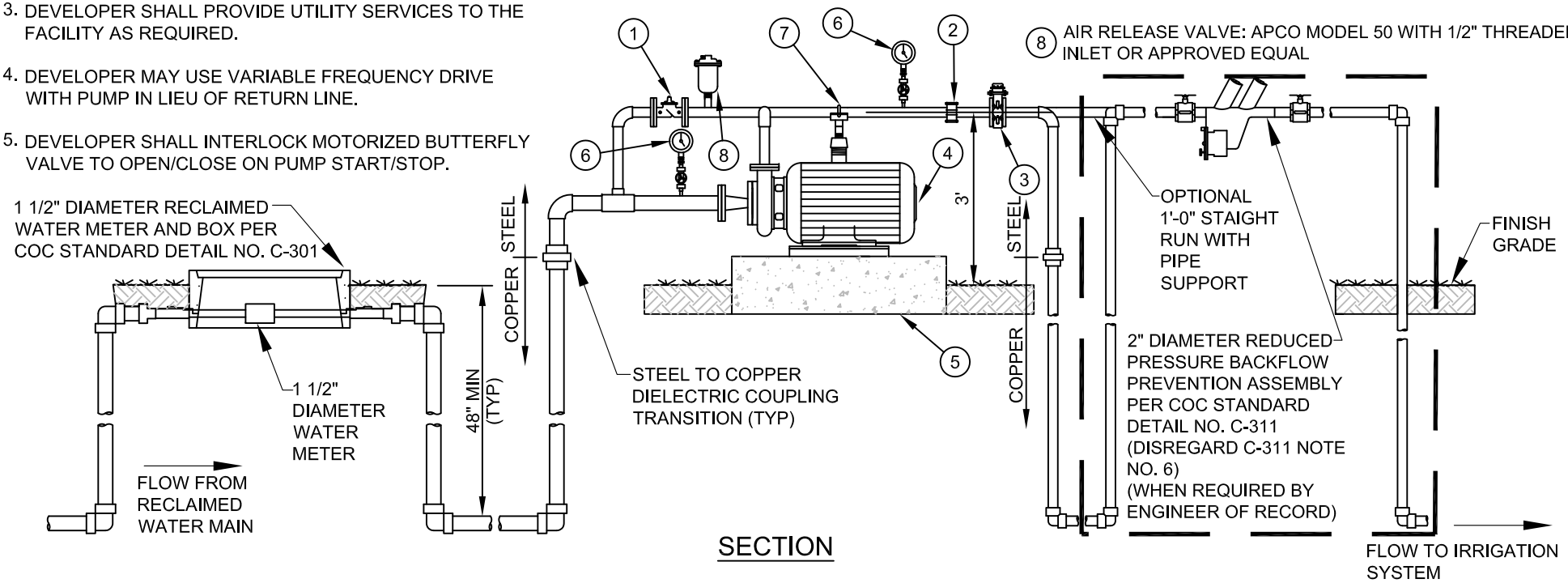

SECTION

DETAIL NO. C-404 PAGE 3 OF 12	CITY OF CHANDLER STANDARD DETAIL	**2" RECLAIMED WATER IRRIGATION SERVICE LINE INLINE PUMP TYPE**	APPROVED: CITY ENGINEER DATE: 01-09-2020	DETAIL NO. C-404 PAGE 3 OF 12

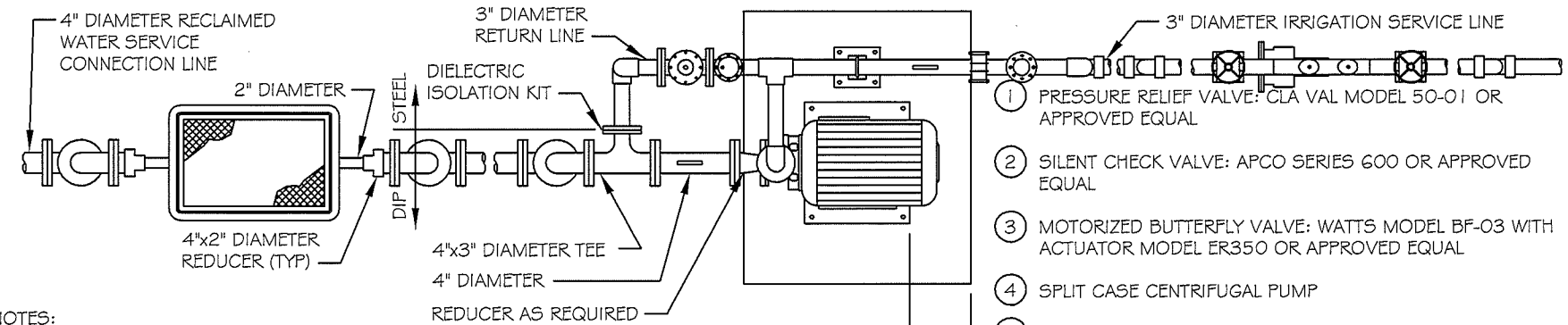

PLAN

1. PRESSURE RELIEF VALVE: CLA VAL MODEL 50-01 OR APPROVED EQUAL
2. SILENT CHECK VALVE: APCO SERIES 600 OR APPROVED EQUAL
3. MOTORIZED BUTTERFLY VALVE: WATTS MODEL BF-03 WITH ACTUATOR MODEL ER350 OR APPROVED EQUAL
4. SPLIT CASE CENTRIFUGAL PUMP
5. PUMP CONCRETE SUPPORT PAD
6. 1/2" THREADED OUTLET, BALL VALVE, SS DIAPHRAGM, AND ASHCROFT TYPE 1009 PRESSURE GAUGE (0-150 PSI) OR APPROVED EQUAL
7. PIPE SUPPORT: B-LINE FIGURE B3088T, B3089, AND B3090 OR APPROVED EQUAL
8. AIR RELEASE VALVE: APCO MODEL 50 WITH 1/2" THREADED INLET OR APPROVED EQUAL

NOTES:

1. ALL ABOVE GROUND PIPING SHALL BE STEEL AND ALL BELOW GROUND PIPING SHALL BE COPPER OR DIP AS INDICATED.
2. PRESSURE RELIEF VALVE SHALL BE SET AT 2 PSI ABOVE SPRINKLER DESIGN PRESSURE.
3. DEVELOPER SHALL PROVIDE UTILITY POWER TO THE FACILITY AS REQUIRED.
4. DEVELOPER MAY USE VARIABLE FREQUENCY DRIVE WITH PUMP IN LIEU OF RETURN LINE.
5. DEVELOPER SHALL INTERLOCK MOTORIZED BUTTERFLY VALVE TO OPEN/CLOSE ON PUMP START/STOP.

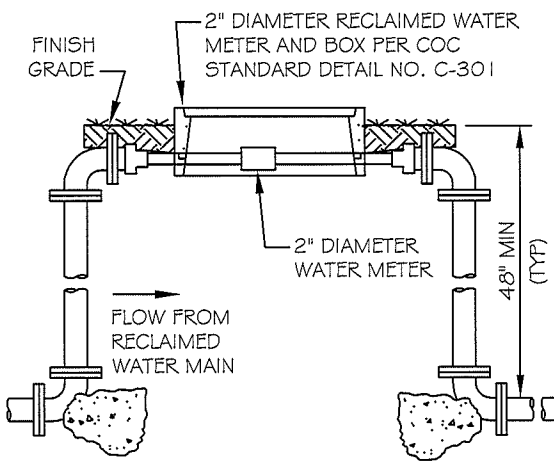

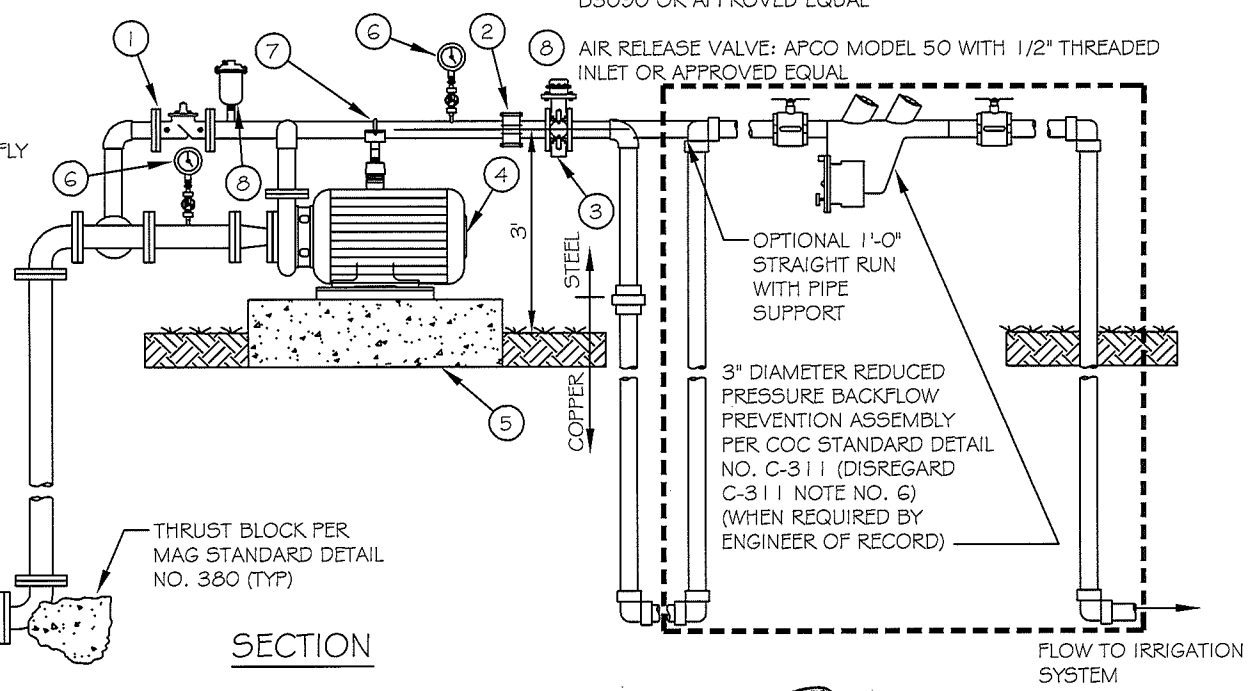

SECTION

DETAIL NO. C-404 PAGE 4 OF 12	CITY OF CHANDLER STANDARD DETAIL	**3" RECLAIMED WATER IRRIGATION SERVICE LINE INLINE PUMP TYPE**	APPROVED: CITY ENGINEER DATE: 1-9-14	DETAIL NO. C-404 PAGE 4 OF 12

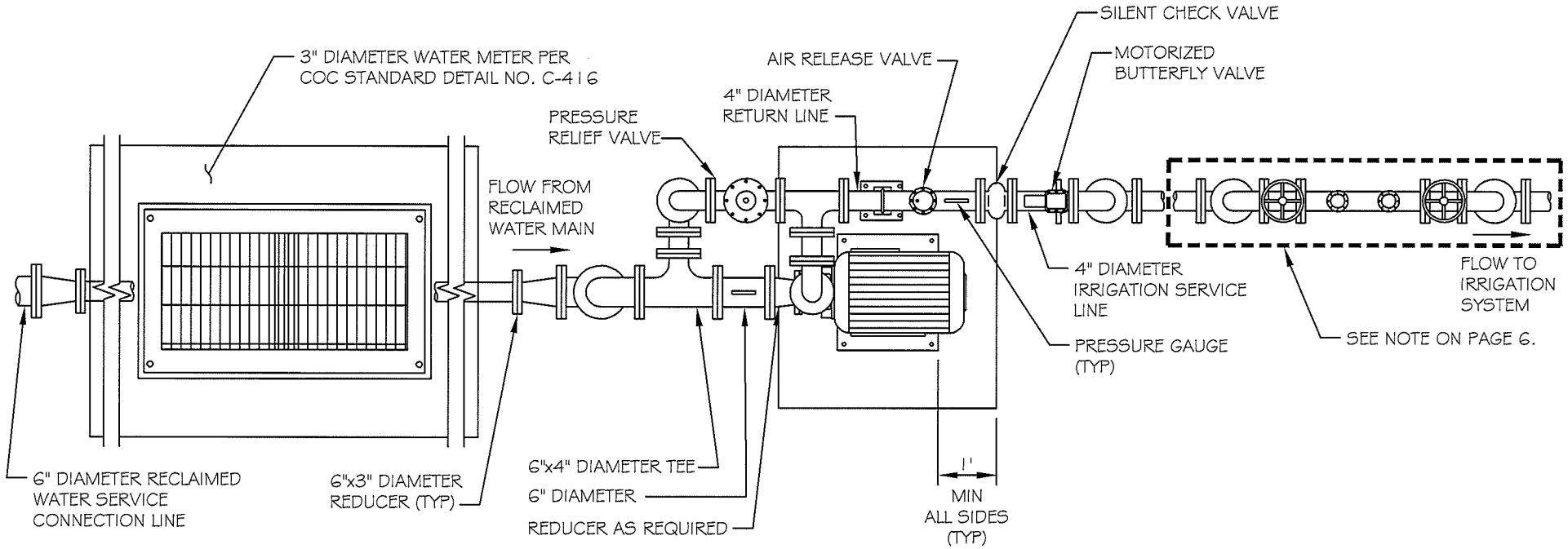

PLAN

NOTES:

1. ALL PIPING SHALL BE DUCTILE IRON (DIP) AS SHOWN.
2. PRESSURE RELIEF VALVE SHALL BE SET AT 2 PSI ABOVE SPRINKLER DESIGN PRESSURE.
3. DEVELOPER SHALL PROVIDE UTILITY SERVICES TO THE FACILITY AS REQUIRED.
4. DEVELOPER MAY USE VARIABLE FREQUENCY DRIVE WITH PUMP IN LIEU OF RETURN LINE.
5. DEVELOPER SHALL INTERLOCK MOTORIZED BUTTERFLY VALVE TO OPEN/CLOSE ON PUMP START/STOP.

DETAIL NO. C-404 PAGE 5 OF 12	CITY OF CHANDLER STANDARD DETAIL	**4" RECLAIMED WATER IRRIGATION SERVICE LINE INLINE PUMP TYPE**	APPROVED: CITY ENGINEER DATE: 1-9-14	DETAIL NO. C-404 PAGE 5 OF 12

1. PRESSURE RELIEF VALVE: CLA VAL MODEL 50-01 OR APPROVED EQUAL
2. SILENT CHECK VALVE: APCO SERIES 600 OR APPROVED EQUAL
3. MOTORIZED BUTTERFLY VALVE: MUELLER LINE SEAL III OR APPROVED EQUAL
4. SPLIT CASE CENTRIFUGAL PUMP
5. PUMP CONCRETE SUPPORT PAD
6. 1/2" THREADED OUTLET, BALL VALVE, SS DIAPHRAGM, AND ASHCROFT TYPE 1009 PRESSURE GAUGE (0-150 PSI) OR APPROVED EQUAL
7. PIPE SUPPORT: B-LINE FIGURE B3088T, B3089, AND B3090 OR APPROVED EQUAL
8. AIR RELEASE VALVE: APCO MODEL 50 WITH 1" THREADED INLET OR APPROVED EQUAL

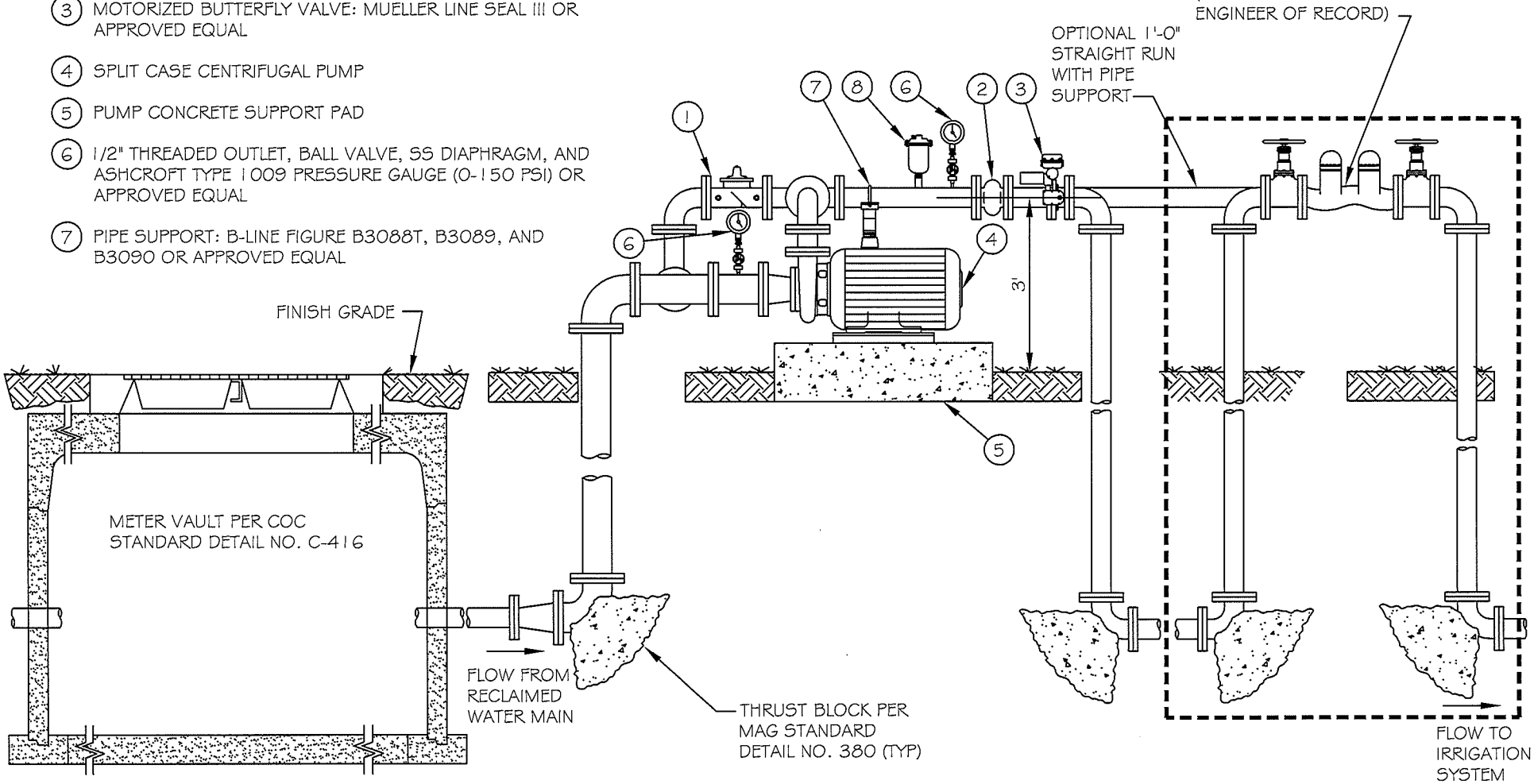

SECTION

DETAIL NO. C-404 PAGE 6 OF 12	CITY OF CHANDLER STANDARD DETAIL	**4" RECLAIMED WATER IRRIGATION SERVICE LINE INLINE PUMP TYPE**	APPROVED: CITY ENGINEER DATE: 1-9-14	DETAIL NO. C-404 PAGE 6 OF 12

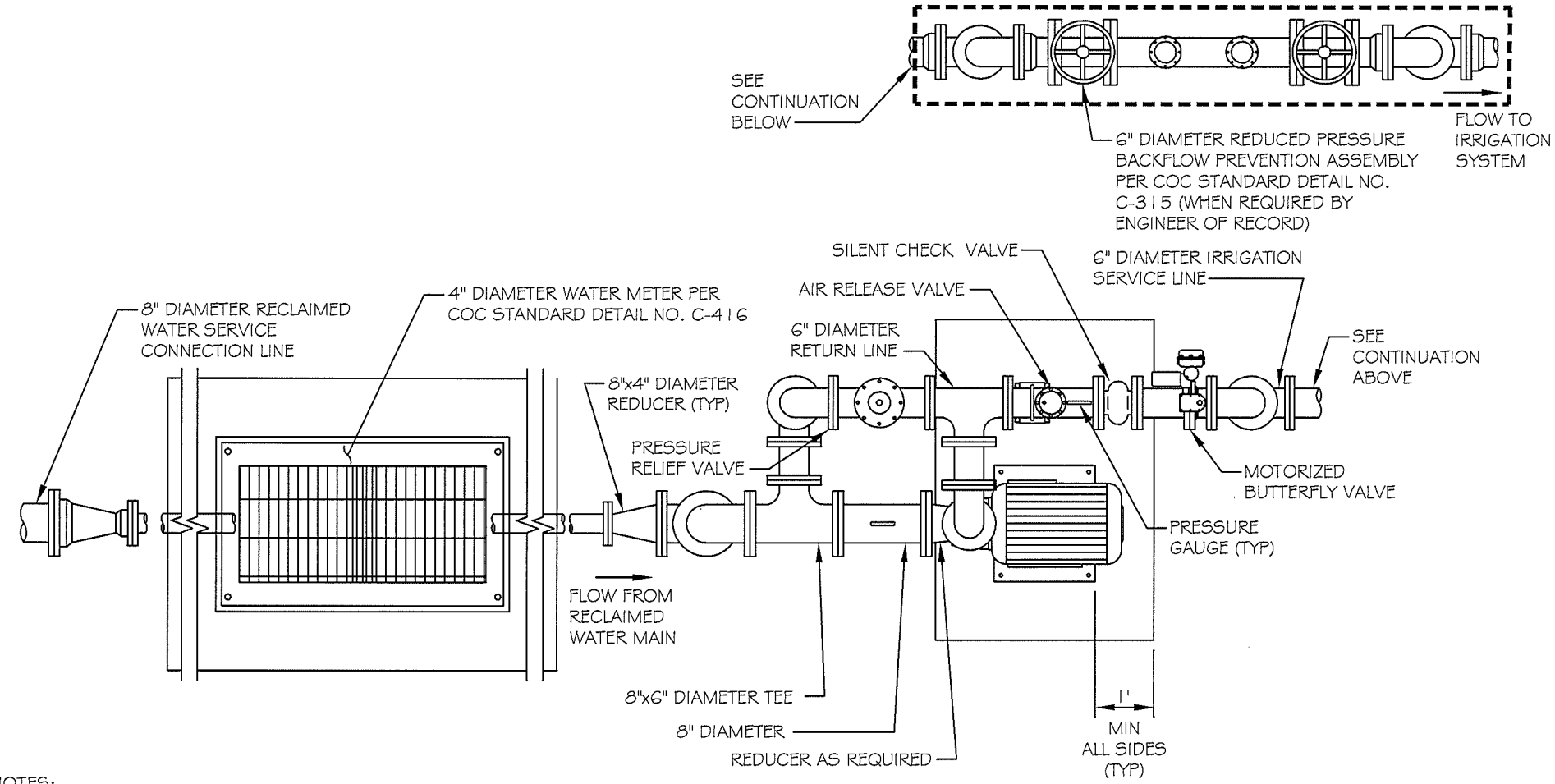

PLAN

NOTES:

1. ALL PIPING SHALL BE DUCTILE IRON (DIP) AS SHOWN.
2. PRESSURE RELIEF VALVE SHALL BE SET AT 2 PSI ABOVE SPRINKLER DESIGN PRESSURE.
3. DEVELOPER SHALL PROVIDE UTILITY SERVICES TO FACILITY AS REQUIRED.
4. DEVELOPER MAY USE VARIABLE FREQUENCY DRIVE WITH PUMP IN LIEU OF RETURN LINE.
5. DEVELOPER SHALL INTERLOCK MOTORIZED BUTTERFLY VALVE TO OPEN/CLOSE ON PUMP START/STOP.

DETAIL NO.					DETAIL NO.
C-404	CITY OF CHANDLER STANDARD DETAIL	**6" RECLAIMED WATER IRRIGATION SERVICE LINE INLINE PUMP TYPE**	APPROVED: CITY ENGINEER		**C-404**
PAGE 7 OF 12			DATE: 1-9-14		PAGE 7 OF 12

1. PRESSURE RELIEF VALVE: CLA VAL MODEL 50-01 OR APPROVED EQUAL
2. SILENT CHECK VALVE: APCO SERIES 600 OR APPROVED EQUAL
3. MOTORIZED BUTTERFLY VALVE: MUELLER LINE SEAL III OR APPROVED EQUAL
4. SPLIT CASE CENTRIFUGAL PUMP
5. PUMP CONCRETE SUPPORT PAD
6. 1/2" THREADED OUTLET, BALL VALVE, SS DIAPHRAGM, AND ASHCROFT TYPE 1009 PRESSURE GAUGE (0-150 PSI) OR APPROVED EQUAL
7. PIPE SUPPORT: B-LINE FIGURE B3088T, B3089, AND B3090 OR APPROVED EQUAL
8. AIR RELEASE VALVE: APCO MODEL 50 WITH 1" THREADED INLET OR APPROVED EQUAL

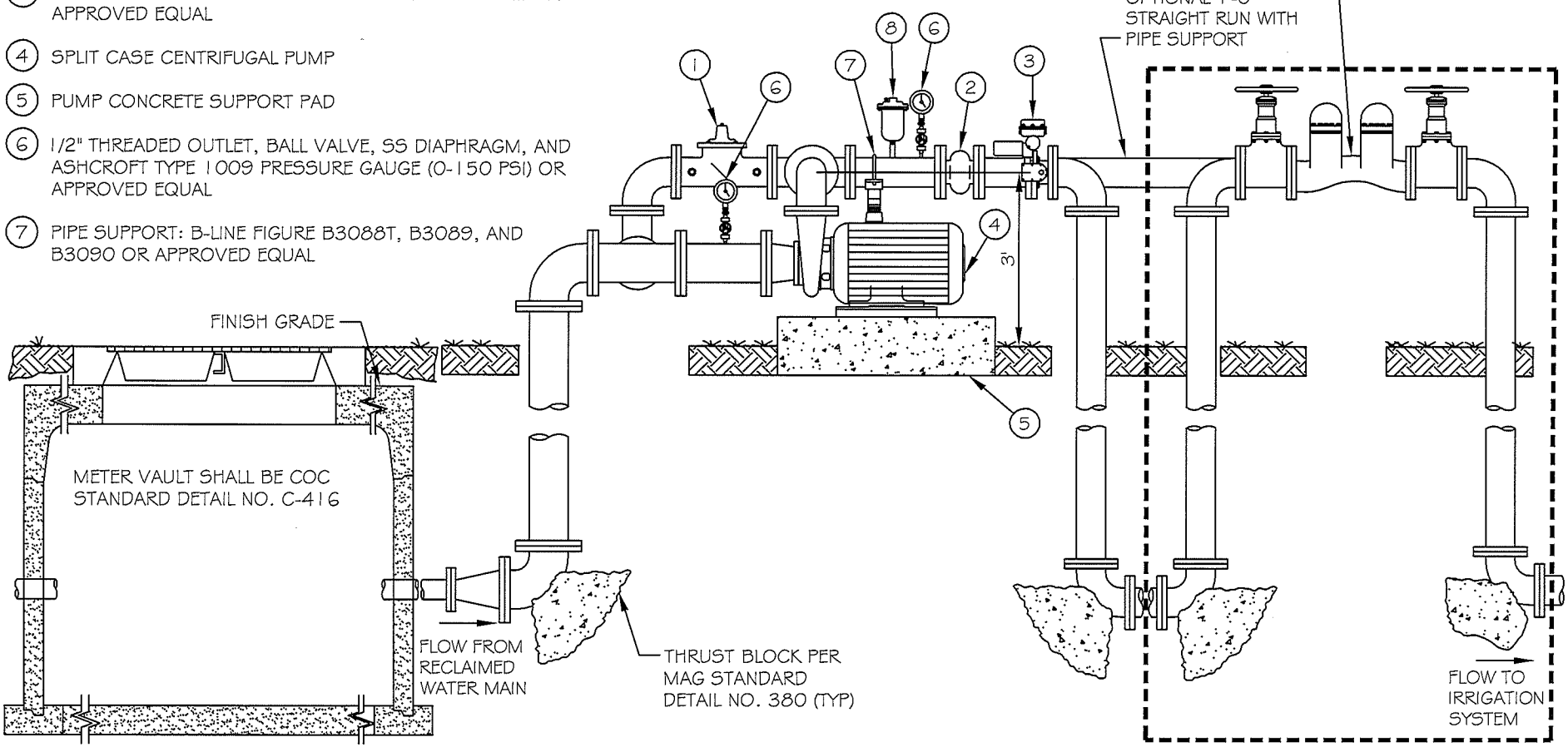

SECTION

DETAIL NO. C-404 PAGE 8 OF 12	CITY OF CHANDLER STANDARD DETAIL	6" RECLAIMED WATER IRRIGATION SERVICE LINE INLINE PUMP TYPE	APPROVED: CITY ENGINEER DATE: 1-9-14	DETAIL NO. C-404 PAGE 8 OF 12

1. PRESSURE RELIEF VALVE : CLA VAL MODEL 6506-01B OR APPROVED EQUAL
2. THRUST BLOCK PER MAG STANDARD DETAIL NO. 380 (TYP)
3. PROPERTY SHALL BE FENCED WITH 6 FOOT BLOCK WALL TO MATCH THE SURROUNDING WALL THEME
4. PROVIDE 6"x3" REDUCER FOR CONTINUATION OF INSTALLATION OF 6" DIAMETER WATER SERVICE CONNECTION LINE, REDUCER SHALL BE LOCATED 2'-0" MAX FROM METER VAULT
5. AIR RELEASE VALVE: APCO MODEL 50 WITH 1/2" THREADED INLET OR APPROVED EQUAL

NOTES:

1. PRESSURE RELIEF VALVE SHALL BE SET AT 2 PSI ABOVE SPRINKLER DESIGN PRESSURE.
2. DEVELOPER SHALL PROVIDE UTILITY SERVICES TO THE FACILITY AS REQUIRED.
3. DEVELOPER MAY USE VARIABLE FREQUENCY DRIVE WITH PUMP IN LIEU OF RETURN LINE.
4. DEVELOPER SHALL INTERLOCK MOTORIZED BUTTERFLY VALVE TO OPEN/CLOSE ON PUMP START/STOP.

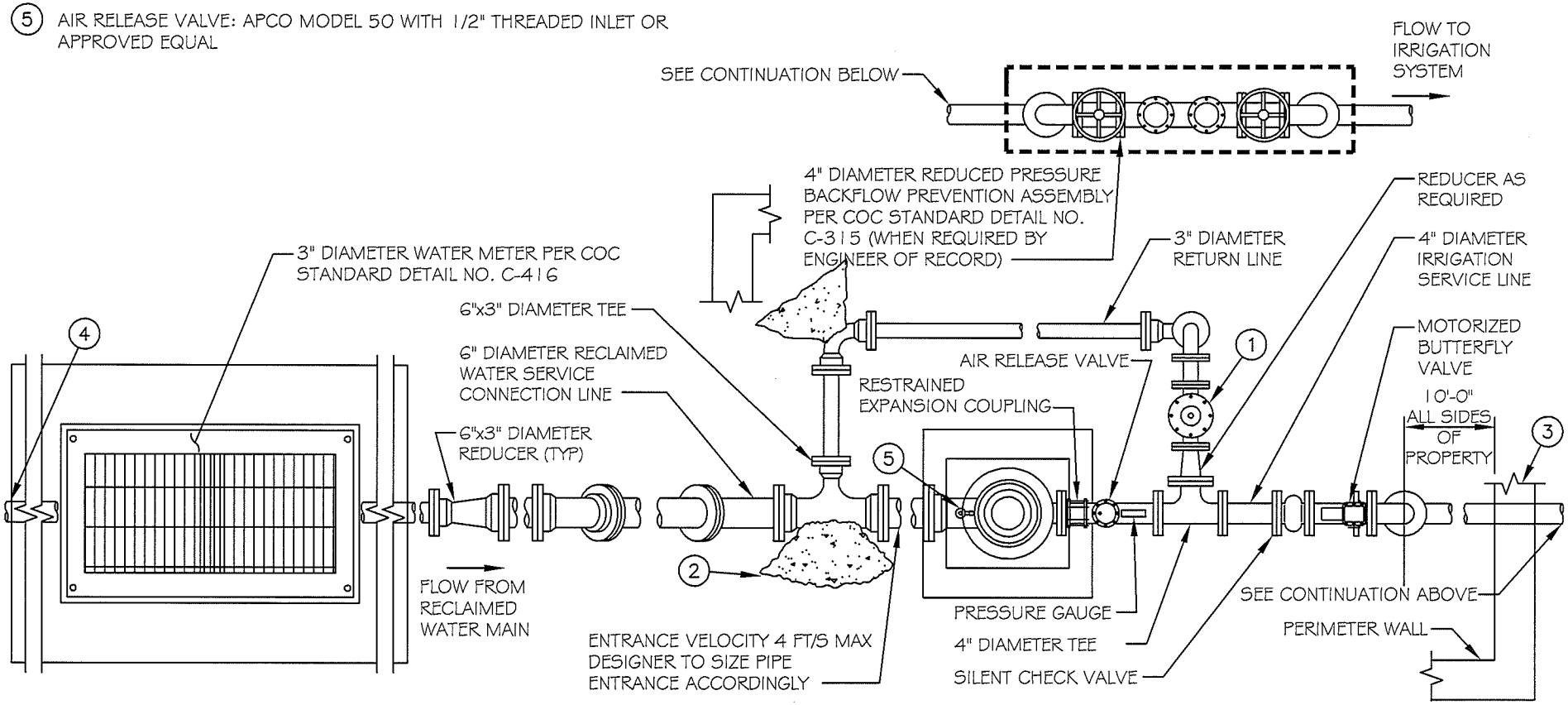

PLAN

DETAIL NO. C-404 PAGE 9 OF 12	CITY OF CHANDLER STANDARD DETAIL	4" RECLAIMED WATER IRRIGATION SERVICE LINE CAN PUMP TYPE	APPROVED: CITY ENGINEER DATE: 1-9-14	DETAIL NO. C-404 PAGE 9 OF 12

1. EPOXY LINED STEEL PUMP CAN, THICKNESS PER PUMP MANUFACTURER
2. 6" CEMENT GROUT SEAL AROUND ENTIRE CAN
3. 4" WIDE BY 1/2" THICK STEEL THRUST COLLAR FULL WELD TO PUMP CAN
4. PUMP SUPPORT BLOCK
5. VERTICAL TURBINE PUMP
6. SILENT CHECK VALVE: APCO SERIES 600 OR APPROVED EQUAL
7. MOTORIZED BUTTERFLY VALVE: MUELLER LINE SEAL III OR APPROVED EQUAL
8. RESTRAINED EXPANSION COUPLING: DRESSER STYLE 127 OR APPROVED EQUAL
9. 1/2" THREADED OUTLET, BALL VALVE, SS DIAPHRAGM, AND ASHCROFT TYPE 1009 PRESSURE GAUGE (0-150 PSI) OR APPROVED EQUAL
10. PROPERTY SHALL BE FENCED WITH 6 FOOT BLOCK WALL TO MATCH THE SURROUNDING WALL THEME
11. DIELECTRIC COUPLING
12. GROUT AROUND ENTIRE MECHANICAL JOINT
13. AIR RELEASE VALVE: APCO MODEL 50 WITH 1" THREADED INLET OR APPROVED EQUAL

NOTE:

1. ALL PIPING SHALL BE DUCTILE IRON (DIP) AS SHOWN.

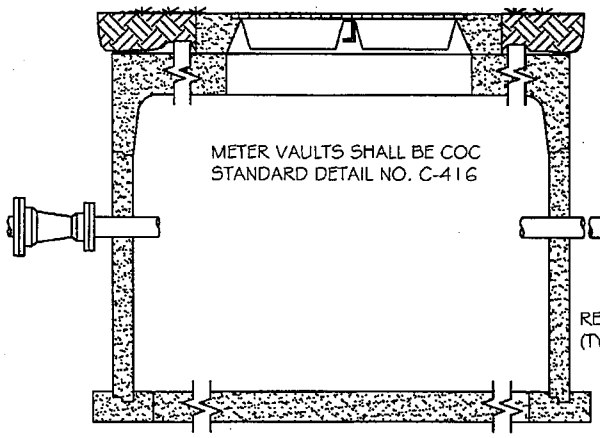

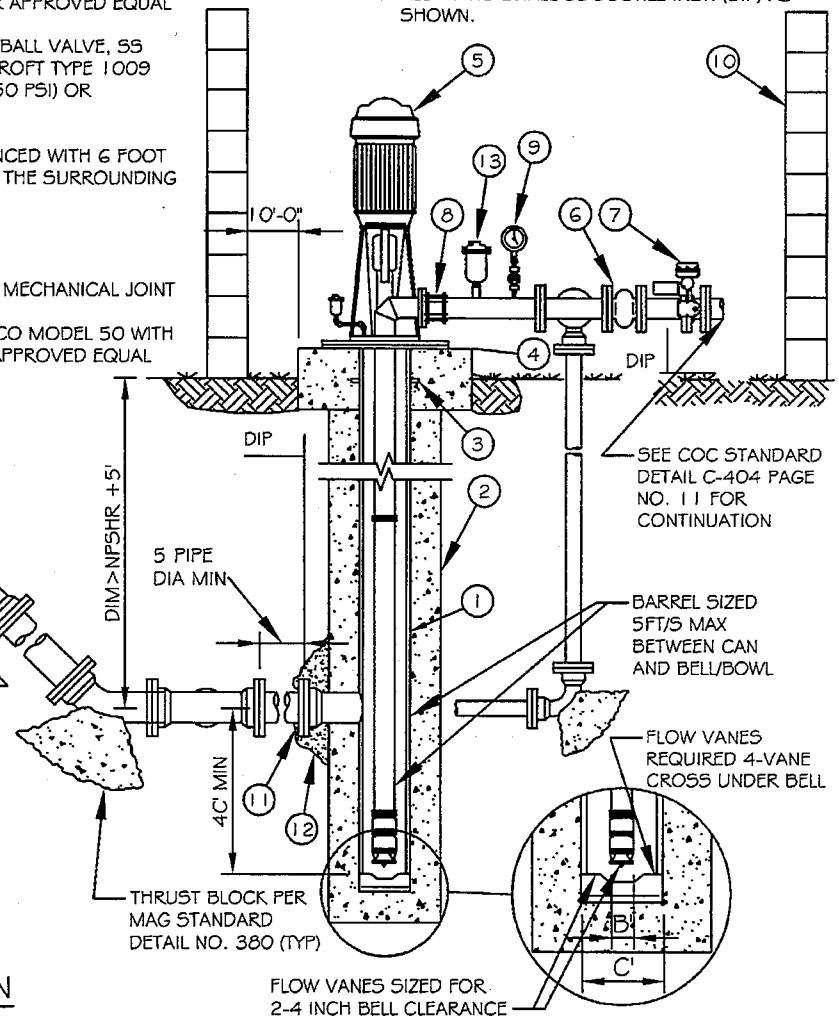

NPSHR= PUMP NET POSITIVE SUCTION HEAD REQUIRED
B' = PUMP SUCTION BELL DIA
C' = CAN OUTSIDE DIA

SECTION

DETAIL NO. C-404 PAGE 10 OF 12	CITY OF CHANDLER STANDARD DETAIL	4" RECLAIMED WATER IRRIGATION SERVICE LINE CAN PUMP TYPE	APPROVED: CITY ENGINEER DATE: June 12/08	DETAIL NO. C-404 PAGE 10 OF 12

1. PRESSURE RELIEF VALVE - CLA VAL MODEL 6506-01B OR APPROVED EQUAL
2. THRUST BLOCK PER MAG STANDARD DETAIL NO. 380 (TYP)
3. PROPERTY SHALL BE FENCED WITH 6 FOOT BLOCK WALL TO MATCH THE SURROUNDING WALL THEME
4. PROVIDE 8"x4" REDUCER FOR CONTINUATION OF INSTALLATION OF 8" DIAMETER WATER SERVICE CONNECTION LINE, REDUCER SHALL BE LOCATED 2' MAX FROM METER VAULT
5. AIR RELEASE VALVE: APCO MODEL 50 WITH 1/2" THREADED INLET OR APPROVED EQUAL

NOTES:

1. PRESSURE RELIEF VALVE SHALL BE SET AT 2 PSI ABOVE SPRINKLER DESIGN PRESSURE.
2. DEVELOPER SHALL PROVIDE UTILITY SERVICES TO THE FACILITY AS REQUIRED.
3. DEVELOPER MAY USE VARIABLE FREQUENCY DRIVE WITH PUMP IN LIEU OF RETURN LINE.
4. DEVELOPER SHALL INTERLOCK MOTORIZED BUTTERFLY VALVE TO OPEN/CLOSE ON PUMP START/STOP.

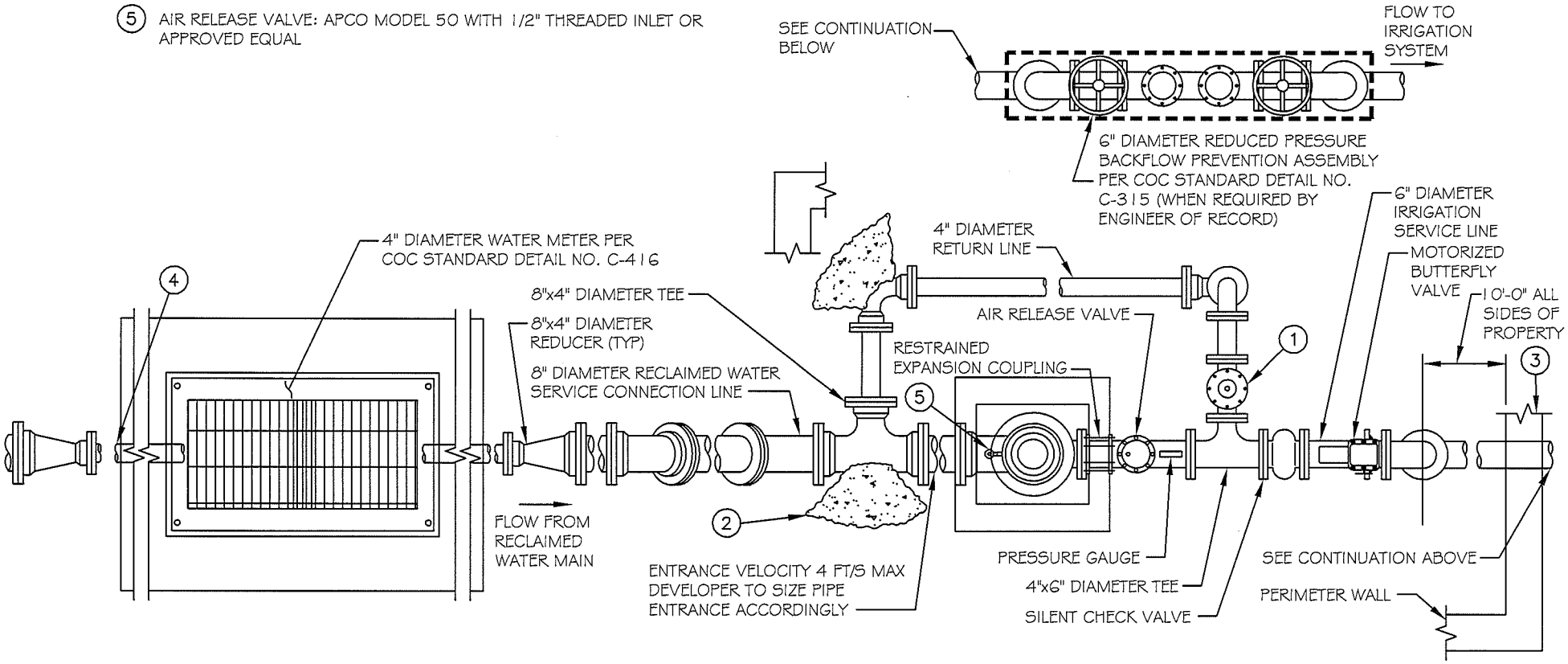

DETAIL NO.					DETAIL NO.
C-404	CITY OF CHANDLER STANDARD DETAIL	**6" RECLAIMED WATER IRRIGATION SERVICE LINE CAN PUMP TYPE**	APPROVED: CITY ENGINEER		**C-404**
PAGE 11 OF 12			DATE: 1-9-14		PAGE 11 OF 12

1. EPOXY LINED STEEL PUMP CAN, THICKNESS PER PUMP MANUFACTURER
2. 6" CEMENT GROUT SEAL AROUND ENTIRE CAN
3. 4" WIDE BY 1/2" THICK STEEL THRUST COLLAR FULL WELD TO PUMP CAN
4. PUMP SUPPORT BLOCK
5. VERTICAL TURBINE PUMP
6. SILENT CHECK VALVE: APCO SERIES 600 OR APPROVED EQUAL
7. MOTORIZED BUTTERFLY VALVE: MUELLER LINE SEAL III OR APPROVED EQUAL
8. RESTRAINED EXPANSION COUPLING: DRESSER STYLE 127 OR APPROVED EQUAL
9. 1/2" THREADED OUTLET, BALL VALVE, SS DIAPHRAGM, AND ASHCROFT TYPE 1009 PRESSURE GAUGE (0-150 PSI) OR APPROVED EQUAL
10. PROPERTY SHALL BE FENCED WITH 6 FOOT BLOCK WALL TO MATCH THE SURROUNDING WALL THEME
11. DIELECTRIC COUPLING
12. GROUT AROUND ENTIRE MECHANICAL JOINT
13. AIR RELEASE VALVE: APCO MODEL 150 WITH 1" THREADED INLET OR APPROVED EQUAL

NOTE:

1. ALL PIPING SHALL BE DUCTILE IRON (DIP) AS SHOWN

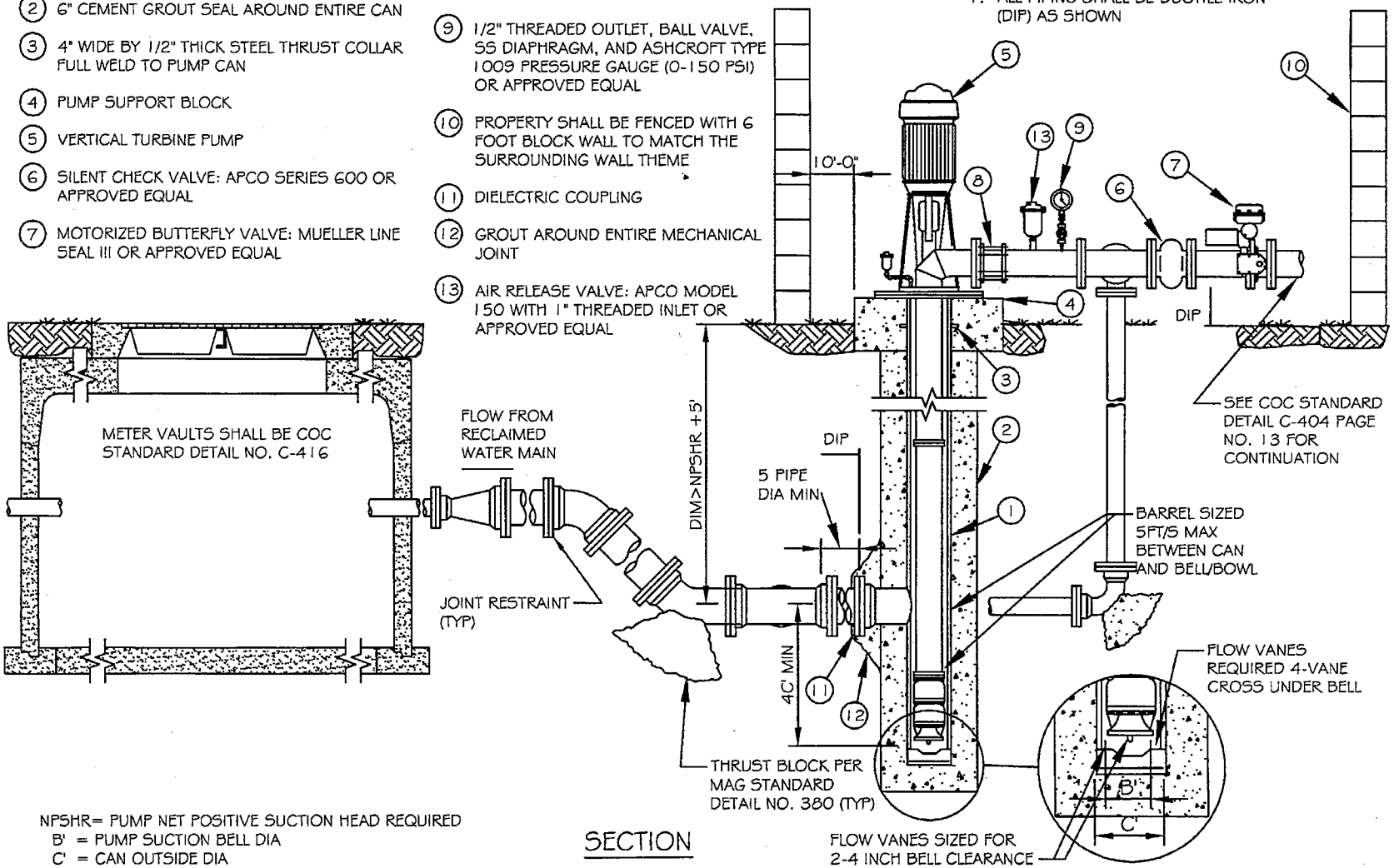

NPSHR= PUMP NET POSITIVE SUCTION HEAD REQUIRED
B' = PUMP SUCTION BELL DIA
C' = CAN OUTSIDE DIA

SECTION

DETAIL NO. C-404 PAGE 12 OF 12	CITY OF CHANDLER STANDARD DETAIL	6" RECLAIMED WATER IRRIGATION SERVICE LINE CAN PUMP TYPE	APPROVED: CITY ENGINEER DATE: June 12/08	DETAIL NO. C-404 PAGE 12 OF 12

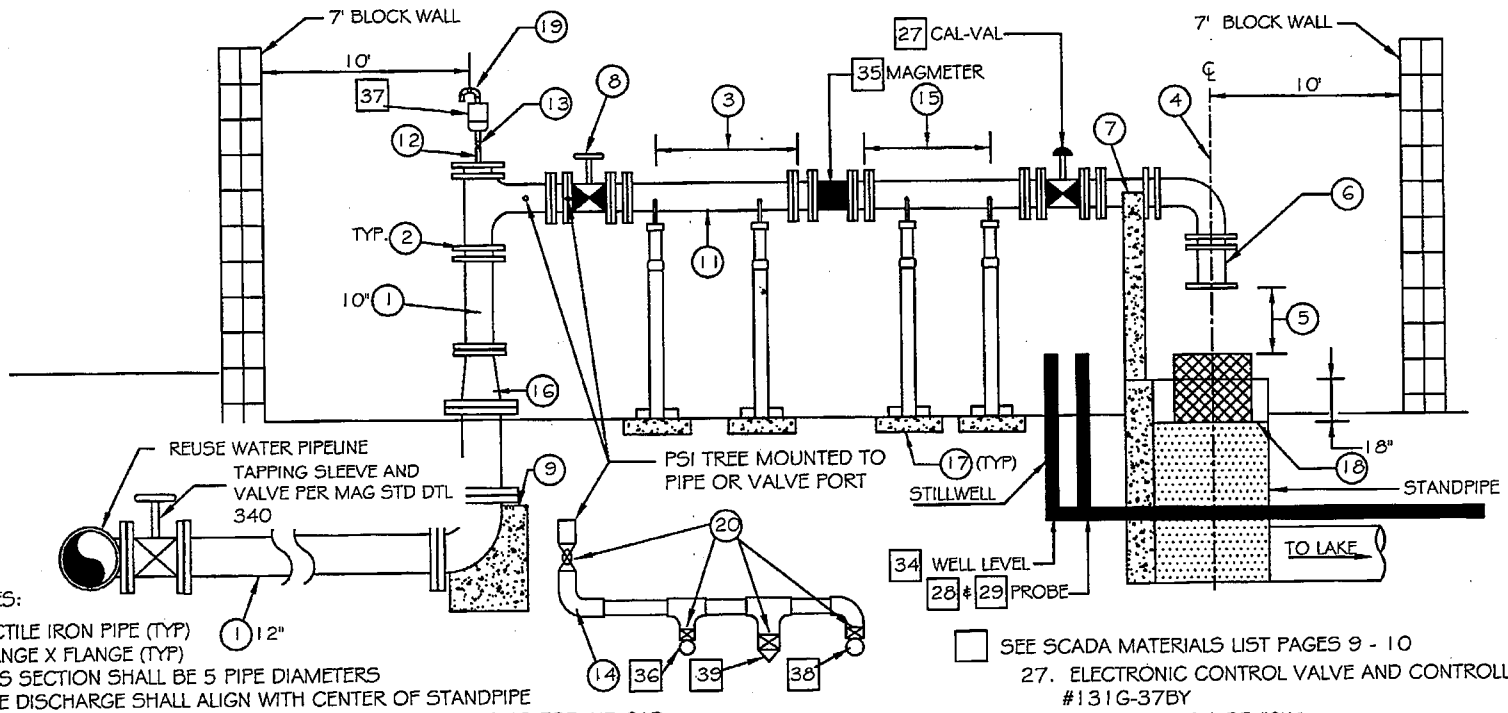

NOTES:

1. DUCTILE IRON PIPE (TYP)
2. FLANGE X FLANGE (TYP)
3. THIS SECTION SHALL BE 5 PIPE DIAMETERS
4. PIPE DISCHARGE SHALL ALIGN WITH CENTER OF STANDPIPE
5. THIS SPACING SHALL BE GREATER THAN 2 PIPE DIAMETERS FOR AIR GAP
6. 1' SPOOL PIECE
7. PROVIDE CONCRETE SUPPORTS AS SHOWN
8. PROVIDE RESILIENT SEAT GATE VALVE
9. PROVIDE THRUST BLOCK PER MAG STD DTL 380
10. (NOT USED)
11. 10" D.I.P., TYP.
12. ALL 2" & 1" PIPE SHOULD BE BRASS
13. 2" BALL-CORP VALVE BRASS MALE IN/OUT
14. 1" PSI TREE-SEE DETAIL-BRASS
15. THIS SECTION SHALL BE 3 PIPE DIAMETERS
16. REDUCER MAY BE INSTALLED 12" X 10"
17. PIPE SUPPORTS BOLTED TO 6" CONCRETE FOOTING (TYP)
18. METAL GRATE BOX OVER TOP OF STANDPIPE
19. ALL BRASS FITTINGS
20. 1" BALL-CORP VALVE BRASS

SEE SCADA MATERIALS LIST PAGES 9 - 10

27. ELECTRONIC CONTROL VALVE AND CONTROLLER CLA-VAL #131G-37BY
28. LEVEL PROBE WIRE #3WI
29. PROBE FITTING 3E-3B
34. WELL LEVEL TRANSDUCER CWLTY
35. MAG METER CADILLAC #CMAGxRCF150SSFM
36. GAUGE #AX9831741-4
37. AIR RELIEF/VACUUM CHECK 2" #144DAT.1-F2-16/57
38. PRESSURE TRANSMITTER #CPLVY-0303-2013-Z-RNG
39. CALIBRATION PORT: BRASS

NOTES:

1. PROPERTY SHALL BE DEDICATED TO CITY AND KEYED TO CITY LOCK SYSTEM.
2. PROPERTY SHALL BE FENCED WITH 7' BLOCK WALL TO MATCH THE SURROUNDING WALL THEME.
3. THE TURNOUT STRUCTURE SHALL HAVE THE CAPACITY TO CONVEY 2,000 GPM WITHOUT OVERFLOWING.
4. WIRING TRENCH AND JUNCTION BOXES SHALL BE LOCATED ON FAR SIDE OF PIPE AWAY FROM GATE.

DETAIL NO. C-405 NTS	CITY OF CHANDLER STANDARD DETAIL	LARGE WATER USER (WITH LAKE) RECLAIMED WATER TURNOUT	APPROVED: CITY ENGINEER DATE: 01/08/09	DETAIL NO. C-405 PAGE 1 OF 12

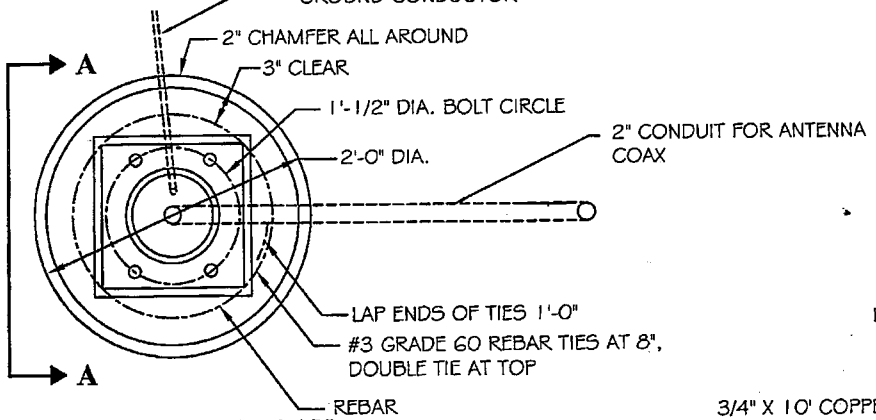

FOUNDATION PLAN

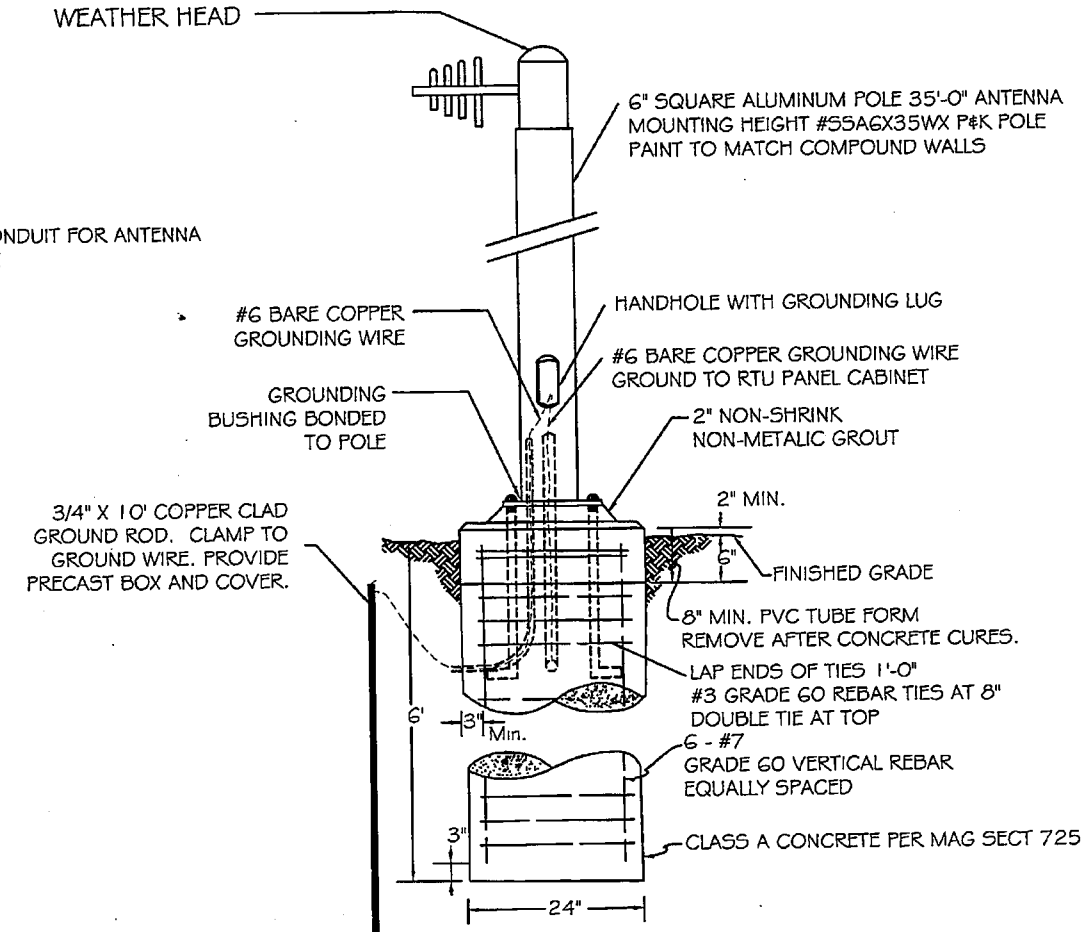

SECTION A-A

NOTES:

1. THE COMPLETE INSTALLATION SHALL WITHSTAND 110 MHP WINDS.
2. ANCHOR BOLTS, LEVELING NUTS, AND POLE BASE SHALL BE FABRICATED BY POLE MANUFACTURER.

DETAIL NO. **C- 405** NTS	CITY OF CHANDLER STANDARD DETAIL	**ANTENNA**	APPROVED: CITY ENGINEER DATE: 01/08/09	DETAIL NO. **C- 405** PAGE 2 OF 12

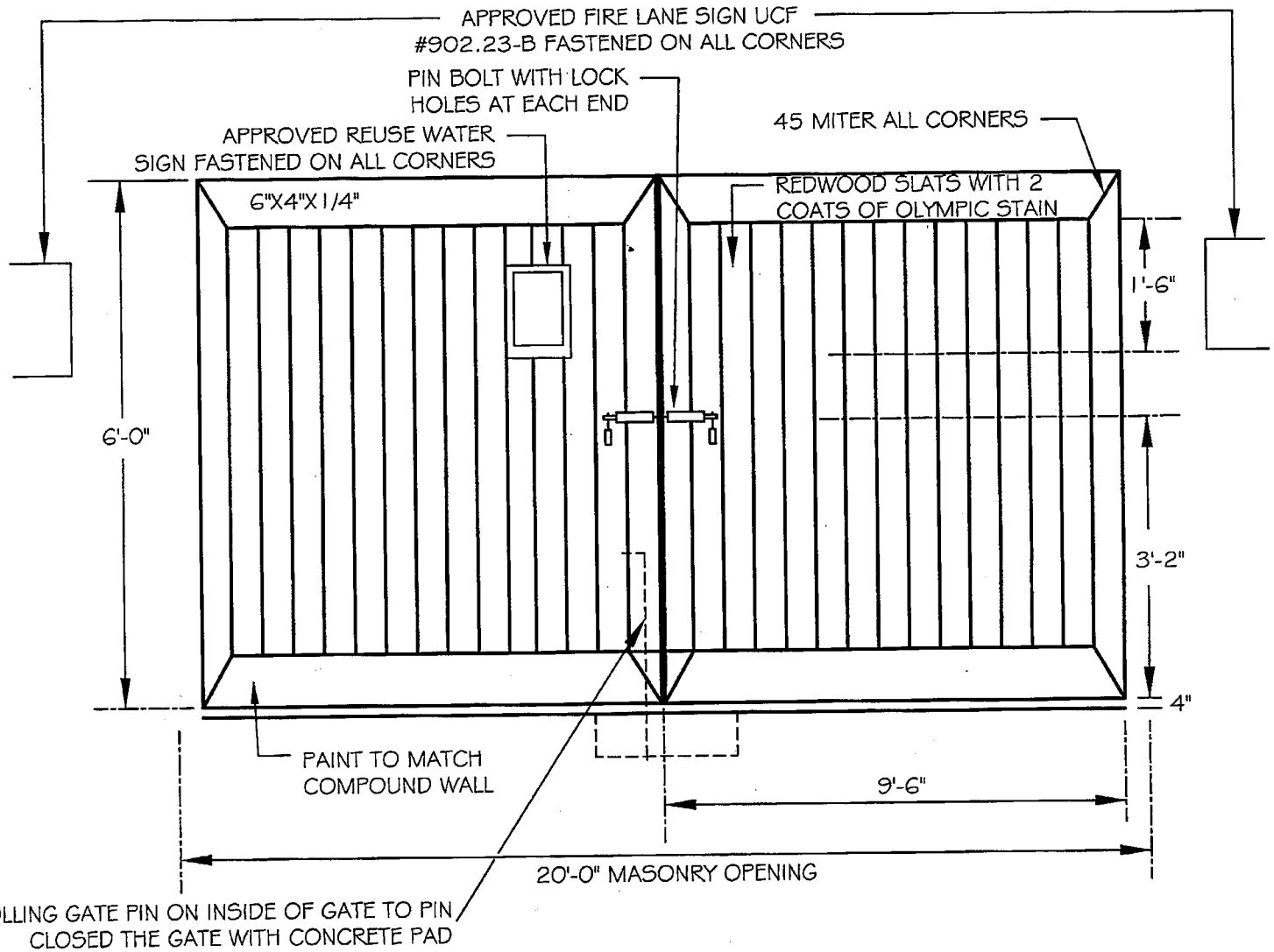

DETAIL NO. **C- 405** NTS	CITY OF CHANDLER STANDARD DETAIL	**ROLLING GATE**	APPROVED: CITY ENGINEER DATE: 01/08/09	DETAIL NO. **C- 405** PAGE 3 OF 12

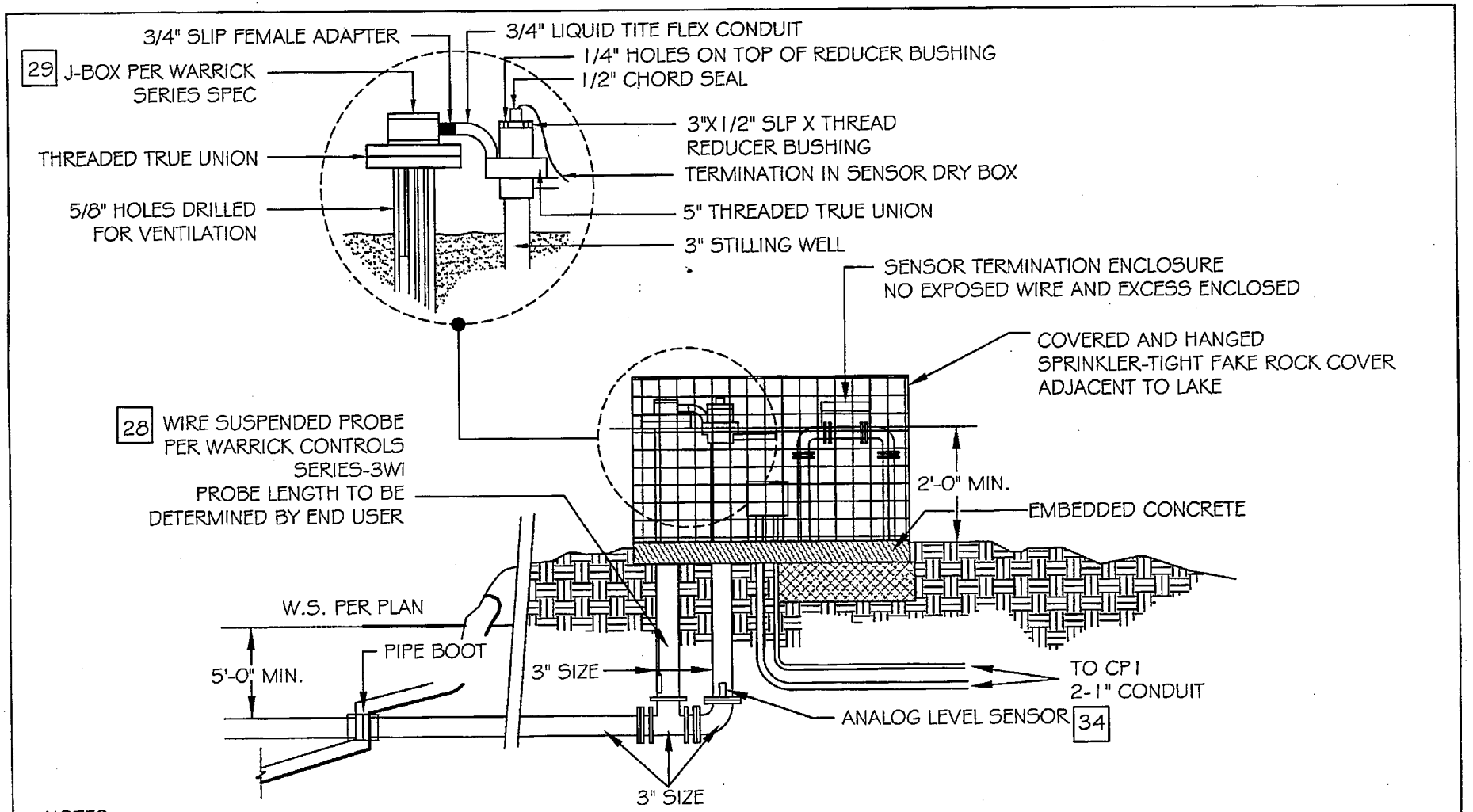

NOTES:

1. LEVEL SENSORS MAY BE LOCATED WITHIN WALLED TURNOUT COMPOUND OR ADJACENT TO LAKE.
2. WHERE ADJACENT TO LAKE, LEVEL SENSORS SHALL BE PROTECTED BY A SCREENED ENCLOSURE COVER BY SIMULATED ROCK.
3. SIMULATED ROCK SHALL BE KRUP.COM INC #AE-CROWN, ORBIT IRRIGATION PRODUCTS INC #35016 GRANITE ROCK BOX, OR ARMORCAST PRODUCTS #P218
4. LEVEL CONTROL LOCATION SHALL BE FIELD LOCATED IN CONSULTATION WITH MR. DAVID CLARK (480) 783-3720

DETAIL NO.					DETAIL NO.
C- 405 NTS	CITY OF CHANDLER STANDARD DETAIL	**LEVEL SENSORS**	APPROVED: CITY ENGINEER DATE: 01/08/09		**C- 405** PAGE 4 OF 12

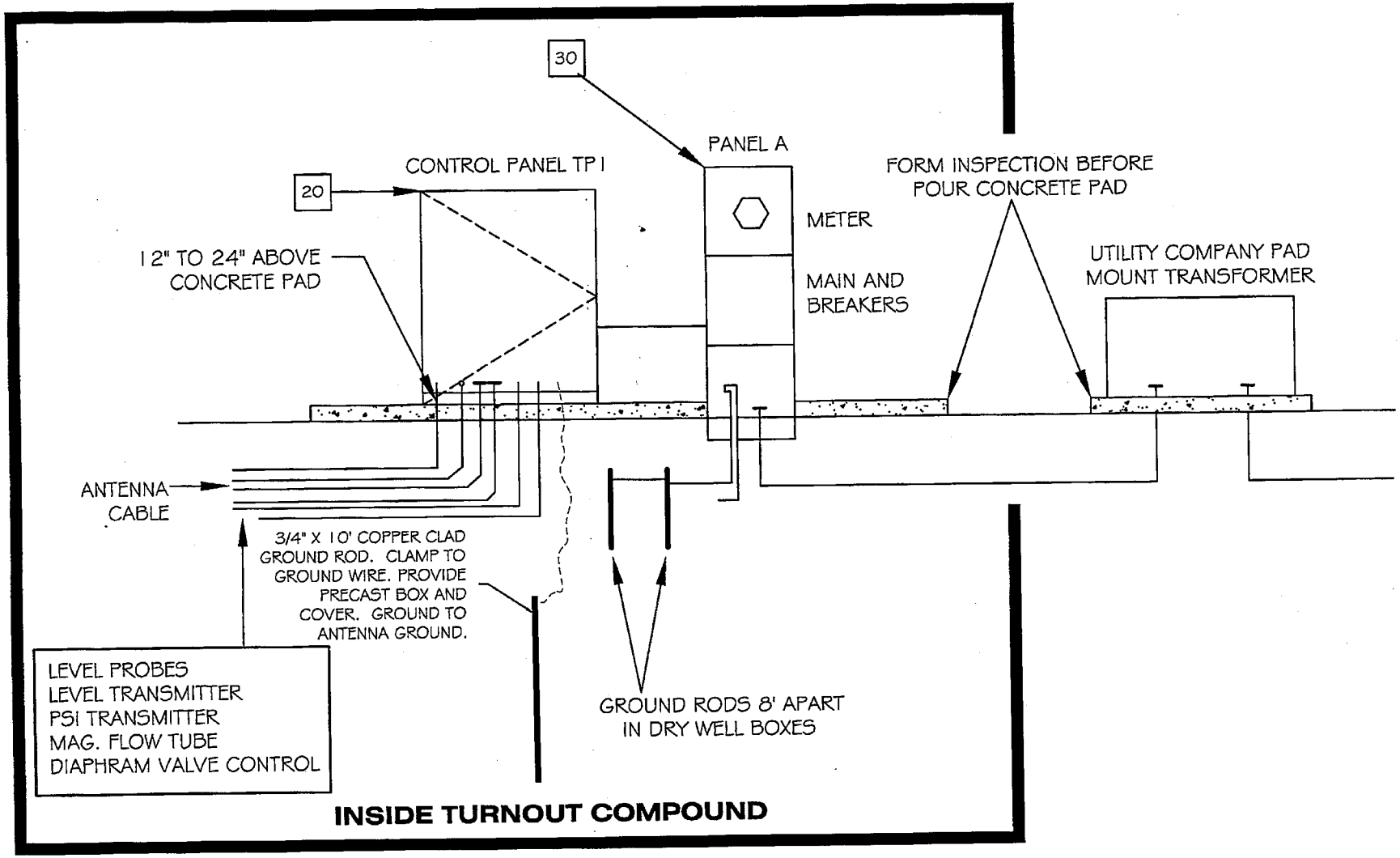

INSIDE TURNOUT COMPOUND

DETAIL NO.					DETAIL NO.
C- 405 NTS	CITY OF CHANDLER STANDARD DETAIL	**METERPED**	APPROVED: CITY ENGINEER DATE: 01/08/09		**C- 405** PAGE 5 OF 12

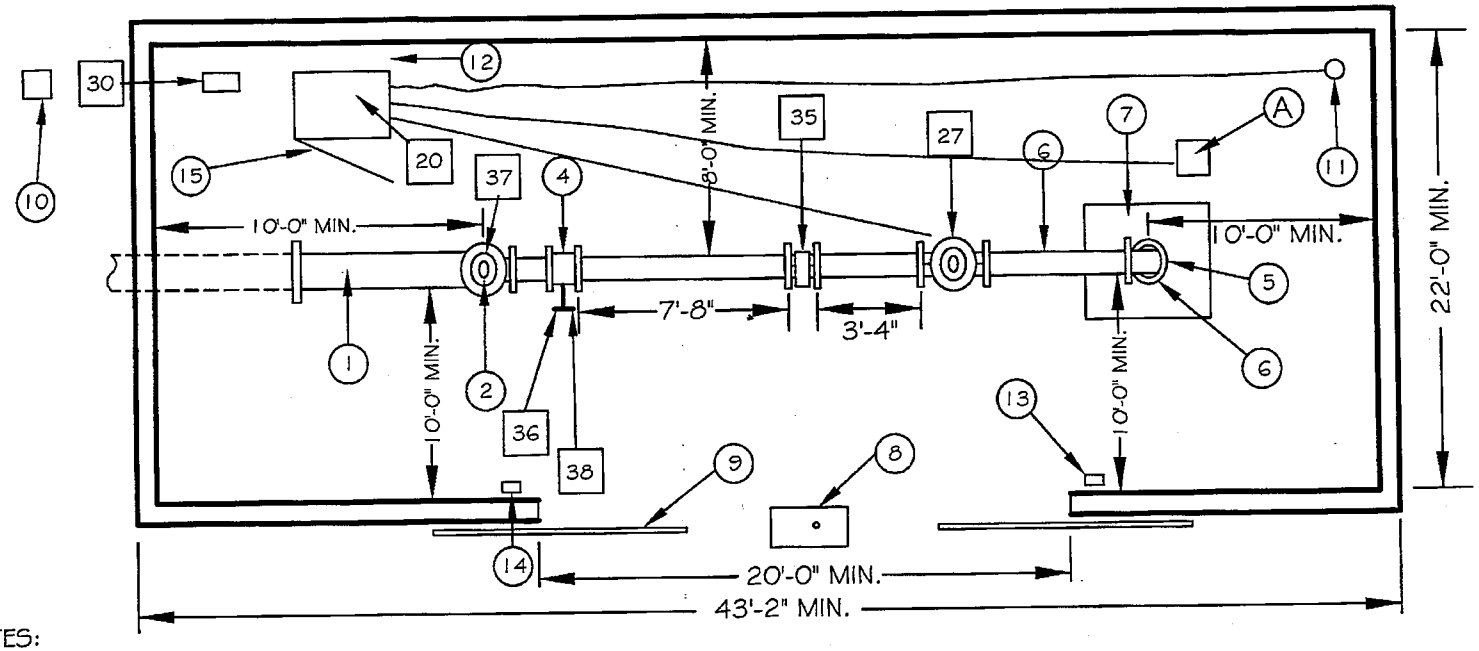

NOTES:

1 12" DUCTILE IRON PIPE
2 2" BALL-CORP. STOP-MALE BRASS PIPE IN/OUT
3 12"X10" CONCENTRIC REDUCER (NOT SHOWN)
4 10" VALVE PER "KENNEDY VALVE" KENSEAL II WITH FLANGED ENDS
5 10" DUCTILE IRON 90 DEGREE ELBOW
6 10" DUCTILE IRON SPOOL PIECE
7 SAFETY SCREEN
8 ROLLING GATE PIN PAD
9 ROLLING GATE PIN ON INSIDE
10 UTILITY COMPANY PAD MOUNT TRANSFORMER
11 ANTENNA
12 MAINTAIN 2' CLEARANCE
13 LIGHT & AC OUTLET
14 LIGHT AC OUTLET & SWITCH
15 DOOR OPENING AS SHOWN
A LEVEL SENSORS

BOXED NOTES - SEE SCADA MATERIAL LISTS PAGES 9 & 10

20 CONTROL PANEL
27 CLA-VAL ELECTRIC VALVE
30 SRP METER PAD
35 10" MAG. METER
36 4" PRESSURE GAUGE
37 2" AIR RELEASE VALVE/VACUUM CHECK
38 PRESSURE TRANSMITTER

ALL CONDUIT RUNS SHALL BE LOCATED ON CONTROL PANEL SIDE OF COMPOUND.

DETAIL NO. C- 405 NTS	CITY OF CHANDLER STANDARD DETAIL	TURNOUT COMPOUND	APPROVED: CITY ENGINEER DATE: 01/05/09	DETAIL NO. C- 405 PAGE 6 OF 12

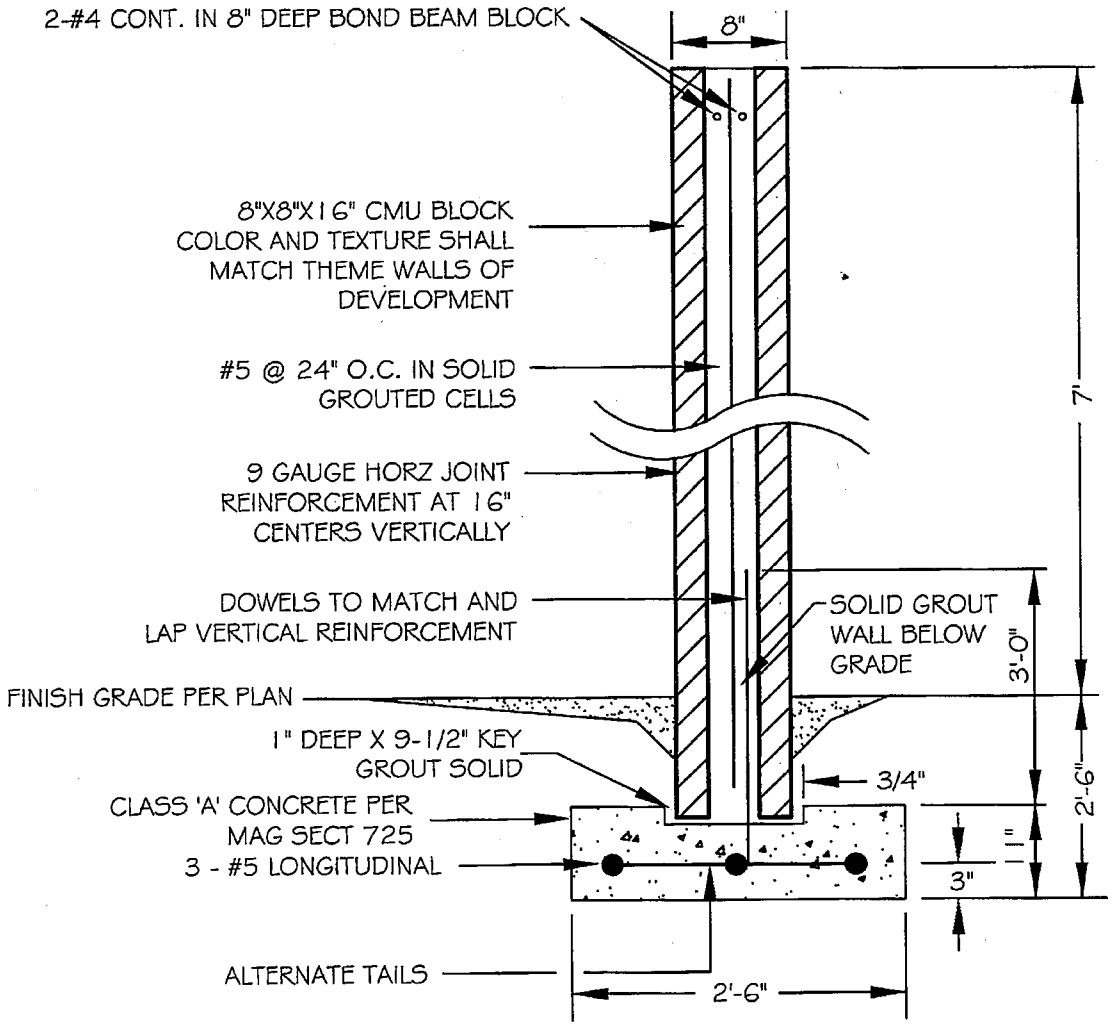

NOTES

CONSTRUCTION IN ACCORDANCE WITH MAG SECT 510

CONCRETE SHALL BE IN ACCORDANCE WITH MAG SECT 725

REINFORCING STEEL SHALL CONFORM TO ASTM SPEC A615 GRADE 60

CONTROL JOINTS AT 24' INTERVALS

MASONRY: f'm=1500 psi, ASTM C90, MEDIUM OR NORMAL WEIGHT, RUNNING BOND, SLUMP BLOCK.

MORTAR: ASTM C270, TYPE S

GROUT: ASTM C476, TYPE COARSE

JOINT REINFORCEMENT: 9 GAUGE LADDER OR TRUSS TYPE, STANDARD WEIGHT, fy=33,000psi, WIRE PER ASTM A82

DETAIL NO. C-405 NTS	CITY OF CHANDLER STANDARD DETAIL	COMPOUND WALL	APPROVED: CITY ENGINEER DATE: 01/08/09	DETAIL NO. C-405 PAGE 7 OF 12

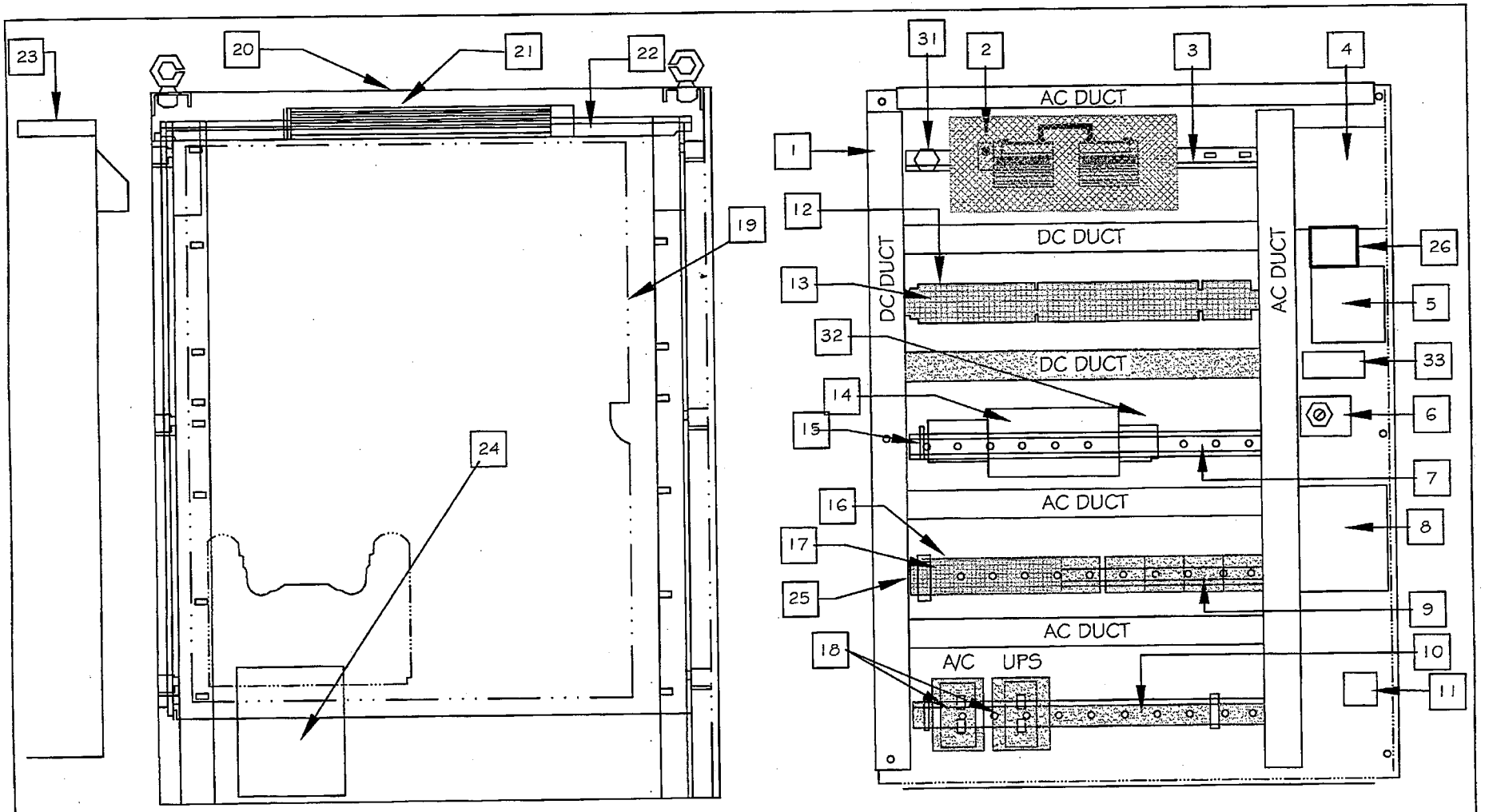

SEE SCADA MATERIAL LIST
PAGES 9 - 10

AC WIRING - RED COLORING HOT
AC WIRING - WHITE COLORING COMMON
AC WIRING - GREEN COLORING EARTH GROUND
DC WIRING - BLUE COLORING +
DC WIRING - WHITE/BLUE COLORING -
ANALOG WIRING - CABLE SHIELDED
AC & DC NOT IN SAME RACEWAY

DETAIL NO.					DETAIL NO.
C- 405	CITY OF CHANDLER STANDARD DETAIL	**SCADA CABINET**	APPROVED: CITY ENGINEER		C- 405
NTS			DATE: 01/08/09		PAGE 8 OF 12

ITEM	DESCRIPTION	MFG	CATALOG	QTY
1	PLASTIC WIRE DUCT	PANDUIT		
2	DIGITAL 16 INPUT/16OUTPUT BASE	MODICON Summit 602-267-1000	MODEL 170 ADM35010	1
2	I/O BUS ADAPTER	MODICON	MODEL 170 INT11000	1
2	ANALOG INPUT BASE	MODICON	Model 170AAI1400	1
2	PROCESOR WITH INTERBUS PORT	MODICON	Model 171CCS76000	1
2	PROCESSOR OPTION ADATOR (REDUNDANT MB+)CLOCK	MODICON	Model 172PNN26022	1
2	I/O BUS ADAPTER CABLE	MODICON		1
3	STANDARD DIN RAIL 35 MM X 7.5 MM	'ALLEN BRADLEY	199-DR1	1
4	MAG FLOWMETER CONVERTER PANEL MOUNT 120 VAC, 4-20 MA, HART, LCD DISPLAY FOR <16 INCH DETECTORMAG FLOW TUBE SEPARATE ELECTRONICS	Cadillac-AXIOM SOUTHWEST 480-814-7706	CMCRUXXFTFM 2AS Length in feet 3AE Length in ft	1
5	PROTOCOL CONVERTER HART TO MODBUS RTU W/CONFIGURATION SOFTWARE	ARCOM 1-913-549-1000	HT-DS-1	1
6	SELECTOR SW--3 POS MAINT, NEMA 4/13 30.5 MM, KNOB 1NO-1NC SCREW TERMINALS	SQUARE D	9001KS43BH13	1
7, 10, 12 & 25	RAISED DIN RAIL 35 MM X 7.5 MM	ALLEN BRADLEY BORDER 602-244-0331	1492-DR6	4
8	RADIO TRANSCIEVER LICENSED 800 TO 960 MHZ, 5 WATTS, -30 DEG C TO + 60 DEG.C	MDS Radio Border States Electric 602-244-0331	9710A	1
9	LEVEL RELAY PLUG-IN DRDT, 10KOHM, 120 VAC, 10 SEC W/ BASE	WARRICK	16DMB1A0-X-10-10	2
9	RELAY--ICE CUBE ICE CUBE 24 VDC COIL DPDT, 10 A CONTACTS W/NR51 BASE	SQUARE D	8591KP12V14	2
9	RELAY--ICE CUBE ICE CUBE 120 VAC COIL DPDT, 10 A CONTACTS W/NR51 BASE	SQUARE D	8501KP12V20	1
11	LIGHTNING PROTECTOR FLANGE MOUNT 1225-1000MHZ, F/F 220 ? J	POLYPHASER	IS-50NX-C2	1
13 & 16	TERMINAL BLOCK DOUBLE FEED--THROUGH BLUE, 24-12 AWG 32 A .25 INCH	PHOENIX CONTACT	UDK 4 BU	74
14	POWER SUPPLY TRACK MOUNTED 24VDC, 240W, 10A W/INTERNAL FUSING	IDEC	PSR5-G24	1
15	POWER SUPPLY TRACK MOUNTED 12VDC, 30W, 2.5A W/INTERNAL FUSING	IDEC	PSR5-C12	1
17	TERMINAL BLOCK DOUBLE FEED--THROUGH GRAY, 24-12 AWG 32 A .25 INCH	PHOENIX CONTACT	UDK 4	26
18	DUPLEX RECEPTACLE TRACK MOUNTED 120V, 15A	PHOENIX CONTACT	EM-DUO/120/15	2
19	BACKPANEL, PAINTED STEEL FOR F5 ENCLOSURE	HOFFMAN BrownWholeSale 602-275-8521	A60P36F1	1
20	ENCLOSURE, FREE STANDING, NEMA 12, PAINTED STEEL	HOFFMAN	A603624FS	1
21	LIGHTING PACKAGE, FLUORESCENT, 115 VAC .63 AMPS PROVIDE BULBS (NOT IN PACKAGE)	HOFFMAN	A-LFM16D18	1
22	DRIP SHIELD FOR NEMA 12, 4 NEMA 3R, 36 IN WIDE	HOFFMAN	ADK36A	1
23	AIR CONDITIONER SIDE PANEL MOUNT 115 VAC, 4000 BTU	HOFFMAN	M33-0416-G010	1
24	UPS PRO LINE 850 VA FOR 9 MINUTES 26 MINUTES AT HALF POWER	TRIPPLITE	BCPRO850	1
26	ELECTRONIC VALVE CONTROLLER AND SIGNAL RETRANSMISSION MODULES	CLA-VAL ESCO Phone # (602) 264-7946	131VC-1	1
27	10" PIPE DIAMETER WITH HEAVIER SPRING ELECTRIC VALVE	CLA-VAL ESCO Phone # (602) 264-7946	131G-37BY	1
28	LEVEL PROBE WIRE SUSPENDED STAINLESS STEEL W/PVC COATED WIRE	WARRICK	3W1	3

DETAIL NO.
C- 405
NTS

CITY OF CHANDLER STANDARD DETAIL

MATERIALS LIST 1 OF 2

APPROVED: _____ CITY ENGINEER
DATE: 01/08/09

DETAIL NO.
C- 405

ITEM	DESCRIPTION	MFG	CATALOG	QTY
29	PROBE FITTING, PIPE MOUNT, 2 IN , 3 PROBE, BRASS	WARRICK	3E-3B	1
30	LOW PROFILE PEDESTALS	TESCO #(916) 395-8800	26-000 typeIIIAF	1
31	TYPE T THERMOCOUPLE XMTR MINATURE SCALED 0 - 250 DEG F	AXIOM	AXT251-T-0-250F	1
32	1 POLE CIRCUIT BREAKER MINIATURE TRACK MOUNTED 16 A, B (FAST) CURVE MERLIN GERIN	SQUARE D	MG24118	1
33	LCD DISPLAY SCALEABLE FOR ENG UNITS INCHES AND FEET	AXIOM SOUTHWEST 480-814-7706	AX685	
34	WELL LEVEL TRANSDUCER .1% ACCURACY, HART DIGITAL PROTOCOL, RANGE 16.7 ' SPAN,CABLE LENGTH 20' WITH REMOTE DISPLAY	AXIOM SOUTHWEST 480-814-7706	CWLTY-0303-26-26 W-05-RNG16.7ft-02-1907-LEN20ft/CWD50 -0325-2603	1
35	MAGMETER CADILLAC MAG FLOW TUBE 10", ANSI 150LB, 316SS, RUBBER	Cadillac-AXIOM SOUTHWEST 480-814-7706	Model CMAGIRCF150SDSFM	1
36	GAUGE MODEL 30 INWC/0/+100PSI	AXIOM SOUTHWEST 480-814-7706	Ax9831741-4	1
37	AIR RELIEF/VACUUM CHECK 2"	GOBLE SAMPSON 480-969-3667	MODEL# 144DAT.1-F2-16/57	1
38	PRESSURE TRANSMITTER WITH LOCAL DISPLAY TX -15 TO +285 PSI, CONFIGURATION, HART COMPATIBLE, 1/2" CONNECTION, LOOP POWERED 4 - 20 MA OUTPUT.	AXIOM SOUTHWEST 480-814-7706	CPLVY-0303-0213-Z-RNG(-15to+285psig)-02-1916-1326-22	1
39	BRASS CALIBRATION PORT¼ WITH CHECK AND CAP	RALSTON INDUSTRIES (800) 347-6575	#QTFT 2MBI	1
	COAXIAL CABLE --HELIAX 7/8 INCH W/CONNECTORS	ANDREW	LDF5-50	2
	MULTI-CONDUCTOR CABLE--BRAID SHIELDED CONTROL CABLE--18AWG--2 CONDUCTOR (19 X 30) 600V. -65 TO 200 DEG C	BELDEN	83321	9
	CABLE ASSEMBLY--CUSTOM--22AWG	GENERIC	RS323C	1
	RESISTOR 250 OHM, 1 WATT	GENERIC	RES-250	1
	PLUG NEMA 5-15P, 15A, 125 VAC	HUBBEL	HBL5266C	2
	BARE THERMOCOUPLE TYPE T 20 GA. 12" LONG PLUS 3" LEADS	OMEGA	BARE-20-T-12	1
	ANTENNA YAGI 890-960 MHZ W/ MOUNTING HARDWARE	SCALA	TY-900	1
	PANEL SUPPORT, STEEL	HOFFMAN	A60FSHDPS	1
	END BRACKET UNIVERSAL FOR 2 OR 3 LEVEL GRAY	PHOENIX CONTACT	E/UK 1	8
	FUSE TERMINAL BLOCK WITH SCREW CAP TRACK MOUNTED 250 VAC, 20 A FOR BUSSMAN GMC GLASS FUSES	PHOENIX CONTACT	UK 10-DREHSLA 250 (5 X 20)	4
	FUSE, GLASS 5 MM X 20 MM 250 VAC 3.15 AMP MEDIUM TIME DELAY	BUSSMAN	GMC 3.15A	
	END COVER UNIVERSAL GRAY	PHOENIX CONTACT	D-UDK 4	6
	TERMINAL BLOCK DOUBLE FEED--THROUGH GRN-YLW, 24-12 AWG, 32A GROUND TO RAIL .25 INCH	PHOENIX CONTACT	UDK 4-PE	8
	NAMEPLATE ENGRAVED PLASTIC BLACK W/ WHITE LETTERING 1 X 0.25 INCH, TEXT .1 IN TALL	GENERIC	NPGN1X.250LT	24
	NAMEPLATE ENGRAVED PLASTIC BLACK W/ WHITE LETTERING 3 X 1 INCH, TEXT .1 & .2 IN TALL	GENERIC	NPGN312LT	2
	NAMEPLATE ENGRAVED PLASTIC BLACK W/ WHITE LETTERING 3 X 1 INCH, TEXT .1, .2 , & .15 IN TALL	GENERIC	NPGN312L3PT	1
	NAMEPLATE ENGRAVED PLASTIC BLACK W/ WHITE LETTERING 3 X 1 INCH, TEXT .5 IN TALL	GENERIC	NPGN311L	1
	CUSTOM BRACKET PAINTED STEEL 18 GA DIMENSIONS AS SHOWN	GENERIC	BRKT-1	1
	METAL LEGS TO RAISE PANEL A MINIMUM OF 12" --MAXIMUM 24" ABOVE THE PAD	HOFFMAN	SEE OPTION	1 set

DETAIL NO.
C- 405
NTS

CITY OF CHANDLER STANDARD DETAIL

MATERIALS LIST 2 OF 2

APPROVED: _____ CITY ENGINEER
DATE: 01/08/09

DETAIL NO.
C- 405

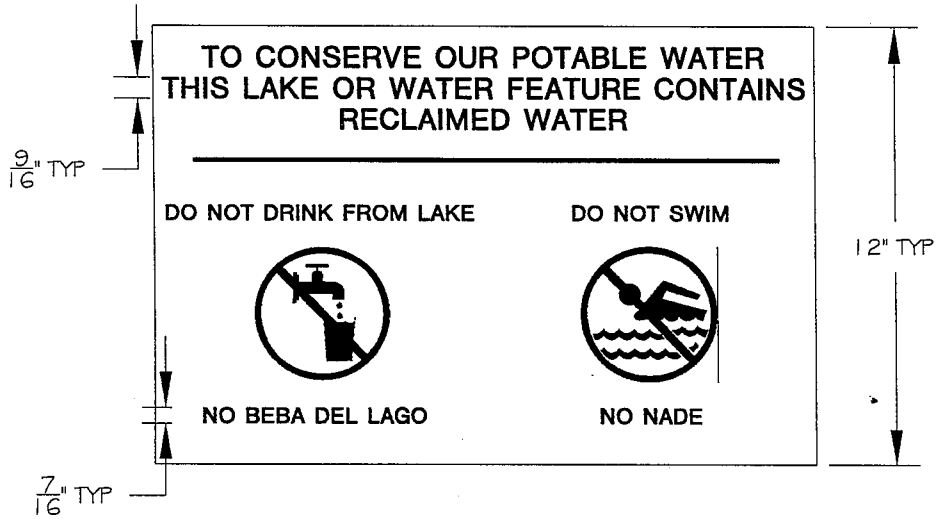

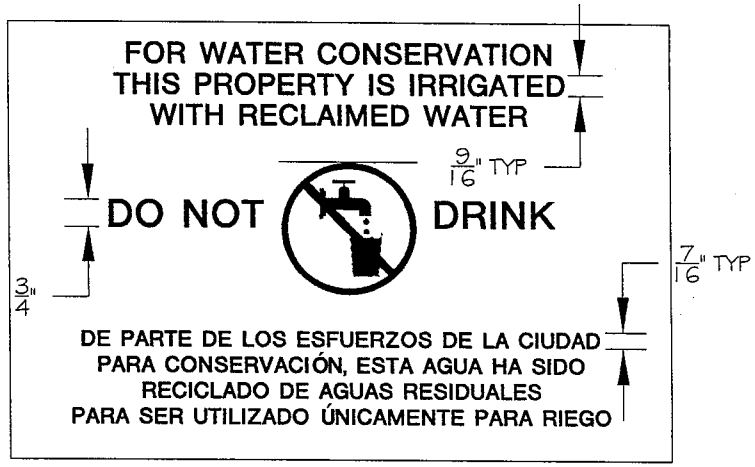

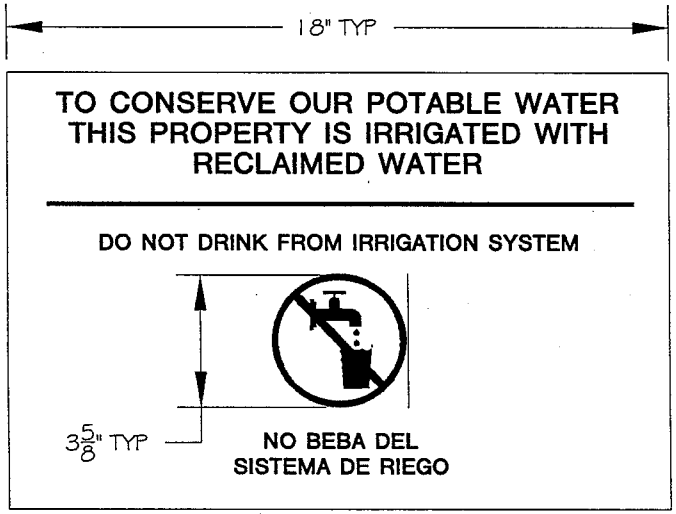

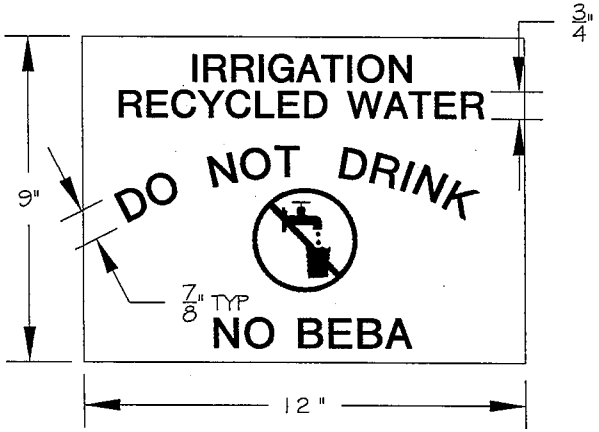

NOTES:

COLOR: COPY: WHITE
BACKGROUND: PURPLE (PANTONE 512)

SIGN PANEL: 1/8" ALUMINUM ALLOY 5052-H38 PER ASTM B 209

PROVIDE 3/8" BORDER BETWEEN PANEL AND BACKGROUND

DETAIL NO.					DETAIL NO.
C- 405	CITY OF CHANDLER STANDARD DETAIL	SIGNAGE	APPROVED: FOR CITY ENGINEER		C-405
NTS			DATE: 11-30-09		PAGE 11 OF 12

ALL EQUIPMENT FURNISHED SHALL BE NEW AND OF CURRENT DESIGN. LIKE EQUIPMENT SHALL BE OF SAME MANUFACTURER.

THE CONTRACTOR SHALL PURCHASE LABOR, MATERIALS,, APPARATUS, APPLIANCES, AND INSTRUMENTATION FROM LOCAL ARIZONA-BASED, AUTHORIZED, FACTORY-TRAINED ENGINEERING REPRESENTATIVES, NOT JUST A STOCKING DISTRIBUTOR. THEY SHALL BE LOCATED WITHIN A 100-MILE RADIUS OF THE PROJECT AND HAVE BEEN IN THE VICINITY FOR A MINIMUM OF 5 YEARS.

DESCRIPTIVE DATA: SUBMIT COPIES OF COMPLETE DESCRIPTIVE LITERATURE, PERFORMANCE DATA, PHYSICAL DIMENSIONS, POWER AND SIGNAL CONNECTIONS FOR EACH COMPONENT AND EQUIPMENT TO BE FURNISHED. PROVIDE NAME OF MANUFACTURER, STYLE, AND COMPLETE MODEL NUMBER. LISTING ITEMS "AS SPECIFIED" WITHOUT BOTH MAKE AND MODEL OR TYPE DESIGNATION IS NOT ACCEPTABLE. SUBSTITUTIONS SHALL NOT BE ALLOWED WITHOUT PRIOR APPROVAL.

COMPONENT DATA SHEETS: SUBMIT A COMPONENT DATA SHEET FOR EACH PIECE OF INSTRUMENTATION EQUIPMENT SIMILAR TO AN ISA S20 FORM. INCLUDE EQUIPMENT TAG NUMBER, MANUFACTURER'S MODEL NUMBER, LOCATION OF SERVICE, MATERIALS OF CONSTRUCTION, SIZE AND SCALE RANGE, CALIBRATED RANGE, SET POINTS, OPTIONAL ACCESSORIES AND ANY OTHER USEFUL INFORMATION.

CONTROL SYSTEM DRAWINGS: SUBMIT 11" X 17" DETAILED SHOP DRAWINGS INDICATING DIMENSIONS, COMPONENT LAYOUT, MOUNTING DETAILS, WIRING DIAGRAMS, NAMEPLATE LEGENDS AND BILL OF MATERIALS FOR EACH CONTROL PANEL.

WIRING DIAGRAMS SHALL INCLUDE ALL INTERCONNECTIONS, INTER-WIRING AND TERMINALS BETWEEN ALL ELECTRICAL AND/OR INSTRUMENTATION UNITS. WIRE NUMBERS SHALL BE CONTINUOUS FROM START TO FINISH. WIRE NUMBERS SHALL NOT CHANGE WHEN GOING FROM ONE UNIT, CABINET, ENCLOSURE, TERMINAL OR ANY DEVICE TO ANOTHER.

THE SPECIFICATIONS REFERENCE KNOWN STANDARDS AND CODES. EACH SUCH STANDARD REFERENCED SHALL BE CONSIDERED A PART OF THE SPECIFICATIONS TO THE SAME EXTENT AS IF REPRODUCED THEREIN IN FULL. THE FOLLOWING IS A REPRESENTATIVE LIST OF SUCH ASSOCIATIONS, INSTITUTES AND SOCIETIES, TOGETHER WITH THE ACRONYM BY WHICH EACH IS IDENTIFIED:

AIEE	AMERICAN INSTITUTE OF ELECTRICAL ENGINEERS	NEC	NATIONAL ELECTRICAL CODE
ANSI	AMERICAN NATIONAL STANDARDS INSTITUTE	NEMA	NATIONAL ELECTRICAL MANUFACTURER'S ASSOCIATION
ASTM	AMERICAN SOCIETY FOR TESTING AND MATERIALS	NETA	NATIONAL ELECTRICAL TESTING ASSOCIATION
ICEA	INSULATED CABLE ENGINEERS ASSOCIATION	NFPA	NATIONAL FIRE PROTECTION ASSOCIATION
IEEE	INSTITUTE OF ELECTRICAL AND ELECTRONIC ENGINEERS	UL	UNDERWRITER'S LABORATORIES, INC.

EVERY REFERENCE IN THE SPECIFICATIONS SHALL MEAN THE LATEST PRINTED EDITION OF EACH IN EFFECT AT THE CONTRACT DATE OR LATEST EDITION AS ADOPTED BY THE LOCAL GOVERNING AUTHORITY.

SYSTEM RESPONSIBILITY INCLUDES BUT IS NOT NECESSARILY LIMITED TO FURNISHING SYSTEM COMPONENTS, SYSTEM INTEGRATION AND DESIGN, WIRING DIAGRAMS, INSTALLATION SUPERVISION, FIELD INSTRUMENT CALIBRATION, STARTUP, TESTING AND OPERATOR TRAINING. THE I&C CONTRACTOR SHALL COORDINATE WITH THE CITY AND THE PROGRAMMER FOR IMPLEMENTING AND TESTING THE PLC PROGRAMS PRIOR TO THE RTU DELIVERY TO THE SITE.

THE I&C CONTRACTOR SHALL BE A REPUTABLE SYSTEM INTEGRATOR AND BE AN UNDERWRITERS LABORATORY (UL) 508A RECOGNIZED PANEL FABRICATOR. THE I & C CONTRACTOR AND PROGRAMMER MUST BE SEPARATE SUBCONTRACTORS TO THE ELECTRICAL CONTRACTOR. THE I&C CONTRACTOR AND THE ELECTRICAL CONTRACTOR SHALL BE LOCATED WITHIN A 100-MILE RADIUS OF THE PROJECT AND HAVE BEEN IN THAT VICINITY FOR A MINIMUM OF FIVE (5) YEARS. THE I&C CONTRACTOR AND THE ELECTRICAL CONTRACTOR CANNOT BE ONE AND THE SAME.

PROGRAMMER SHALL PROVIDE FULL DOCUMENTATION--BOTH PAPER DOCUMENT OF PROCESS DESCRIPTIONS WITH PAGE NUMBERS AND INDEX AND IN-SOFTWARE NETWORKS, CONTACTS, COILS, AND REGISTERS WITH DESCRIPTIONS AT ALL POINTS. THE PROGRAMMING LANGUAGE SHALL BE PROWORX NXT.

THE TURNOUT STRUCTURE MUST BE CAPABLE OF RECEIVING A MINIMUM OF 2,000 GPM THROUGH THE RECEIVING BOX BELOW THE AIR GAP WITHOUT OVERFLOWING.

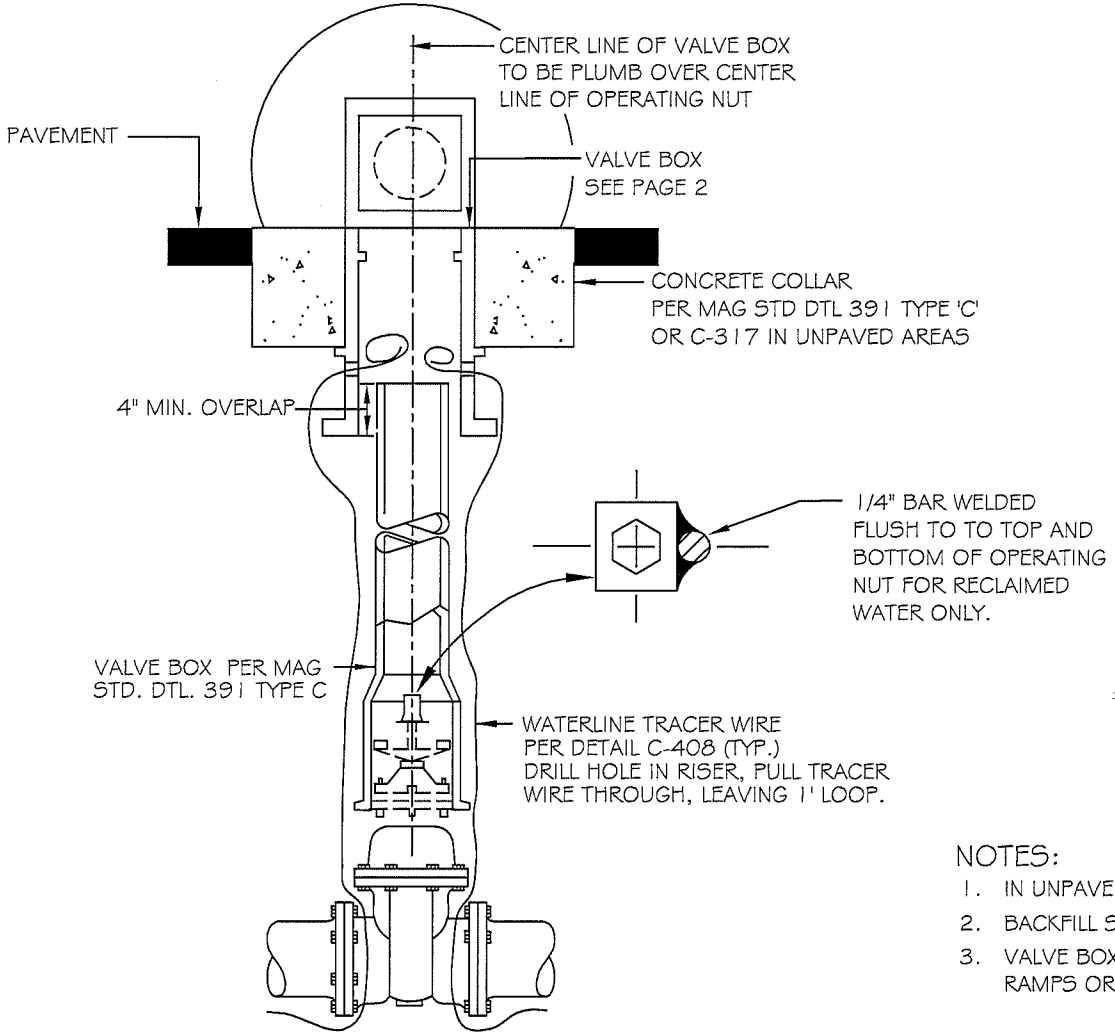

NOTES:

1. IN UNPAVED AREAS, CONCRETE COLLAR SHALL CONFORM TO DETAIL C-317.
2. BACKFILL SHALL BE 1/2 SACK CLSM. PER MAG. SPECIFICATION 718.
3. VALVE BOXES SHALL NOT BE INSTALLED WITHIN CONCRETE GUTTER, SIDEWALK, RAMPS OR VALLEY GUTTER.

DETAIL NO.					
C- 406	CITY OF CHANDLER STANDARD DETAIL	**VALVE BOX INSTALLATION (RECLAIMED WATER)**	APPROVED: CITY ENGINEER		DETAIL NO. **C- 406**
PAGE 1 OF 2			DATE: 07-09-2015		PAGE 1 OF 2

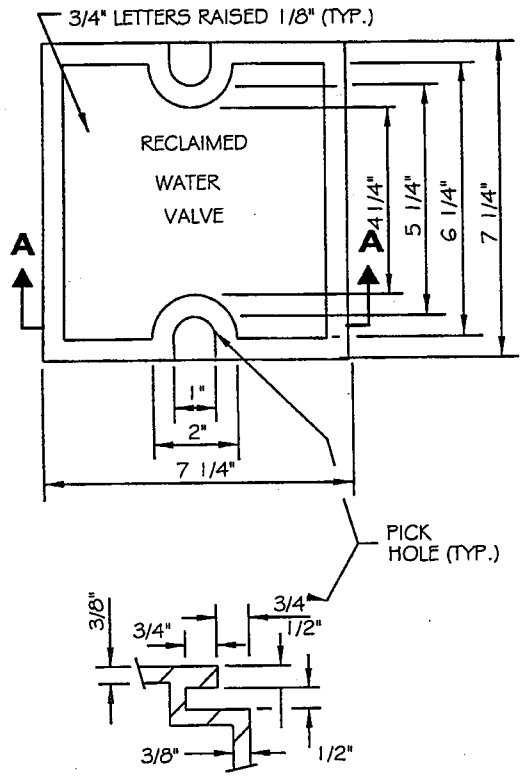

SECTION

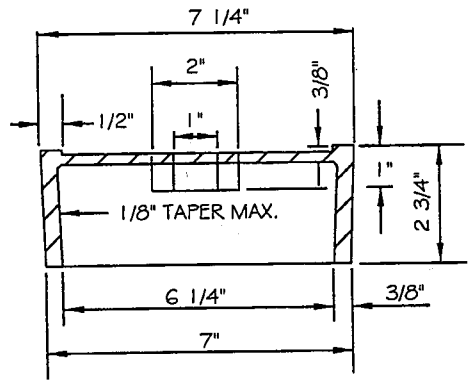

SECTION A - A
COVER

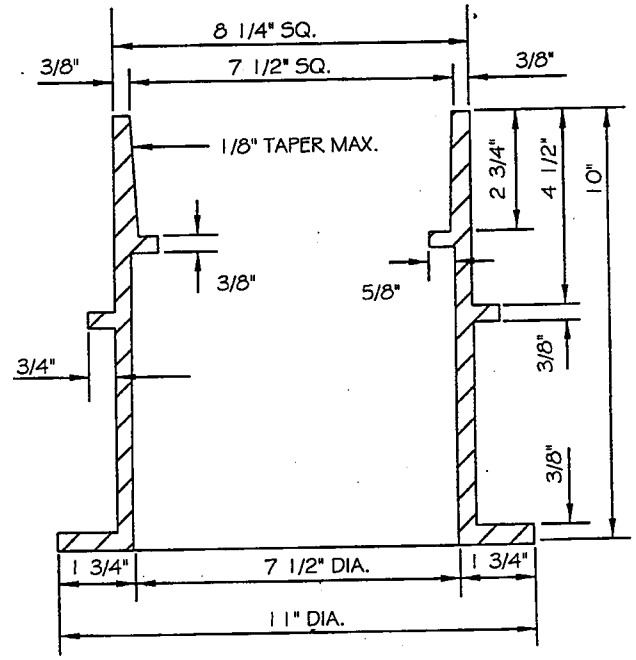

SECTION
VALVE BOX

NOTES:

1. ALL MATERIAL SHALL BE CAST IRON PER ASTM. A-48, CLASS 30 B.
2. THE SURFACES OF THE COVER AND BOX WHICH COME IN CONTACT WITH EACH OTHER MUST BE SMOOTH AND FREE OF ALL CASTING RIDGES AND BURRS TO PROVIDE A SNUG FIT.
3. THE VALVE BOX SHALL HAVE A ROUND BOTTOM TO ACCOMMODATE RISER PIPE. THE TOP OF THE VALVE BOX SHALL BE SQUARE.
4. THE LID AND INSIDE AND OUTSIDE OF THE RISER PIPE SHALL BE COLORED PURPLE. COLOR MAY BE INCORPORATED INTO PIPE DURING MANUFACTURE OR PAINTED ONTO PIPE SURFACE. WHEN PAINTED THE PAINT SHALL BE SEYMOUR SAFETY PURPLE.
5. LETTERING SHALL BE RESTRICTED TO THAT SHOWN ON THE VALVE BOX COVER.

DETAIL NO.					DETAIL NO.
C- 406	CITY OF CHANDLER STANDARD DETAIL	**VALVE BOX INSTALLATION (RECLAIMED WATER)**	APPROVED: CITY ENGINEER DATE: 11-19-99		C- 406 PAGE 2 OF 2

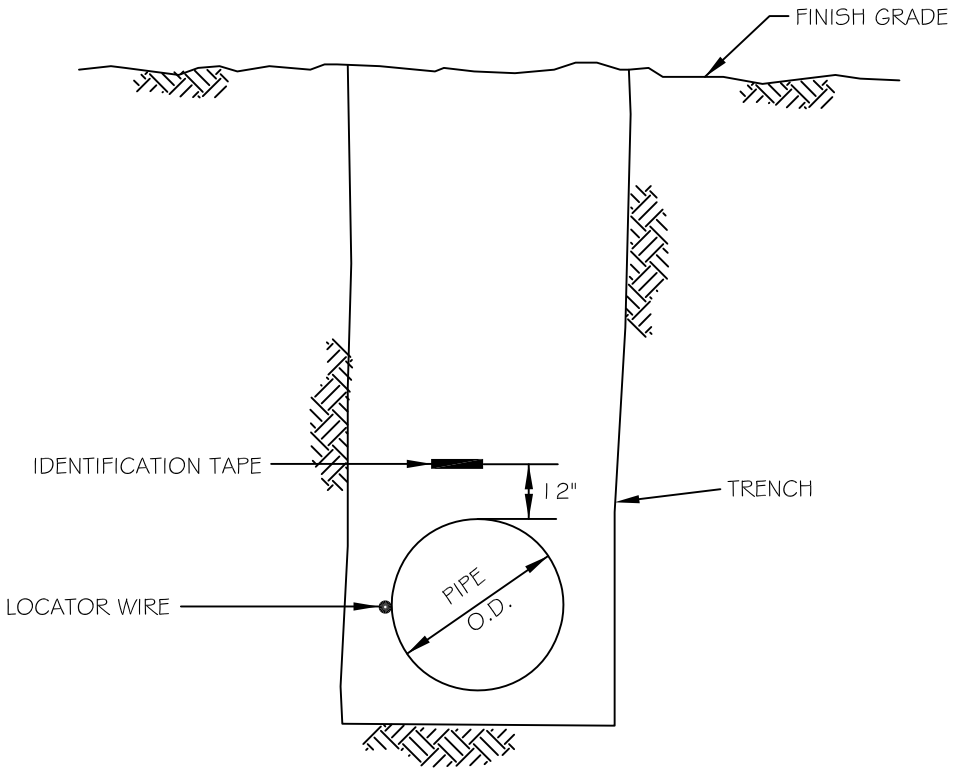

NOTES:

1. I.D. TAPE AND LOCATOR WIRE SHALL BE INSTALLED ON PUBLIC DISTRIBUTION AND COLLECTION MAINS FOR ALL PIPE MATERIALS AND SIZES 4" AND LARGER.
2. I.D. TAPE AND MARKINGS SHALL BE PER MAG STD. SPEC. SEC. 616.4, EXCEPT AS MODIFIED HEREON.
3. LOCATOR WIRE SHALL BE AWG #14 THWN COPPER WIRE, TAPED TO PIPE EVERY 8-10 FEET.
4. LOCATOR WIRE SHALL ORIGINATE/ TERMINATE AT VALVE BOXES AND MANHOLES AND BE SECURED TO VALVE BOX OR MANHOLE NO MORE THAN 12" BELOW COVER.
5. LOCATOR WIRE SHALL BE VERIFIED FOR ELECTRICAL CONTINUITY ALONG THE ENTIRE LENGTH.

IDENTIFICATION TAPE & WIRE COLOR AND MARKING SCHEDULE

PIPELINE USE	COLOR	PRINTED MESSAGE
RECLAIMED WATER	MAG SPEC SEC 616.4	MAG SPEC SEC 616.4
POTABLE WATER	SOLID COLUMBIA BLUE	CAUTION POTABLE WATER LINE
SEWER	GREEN	CAUTION: SANITARY SEWER

C-408	CITY OF CHANDLER STANDARD DETAIL	PIPE LOCATOR WIRE & I.D. TAPE	APPROVED: CITY ENGINEER DATE: 01-09-2020	DETAIL NO. C-408 NTS

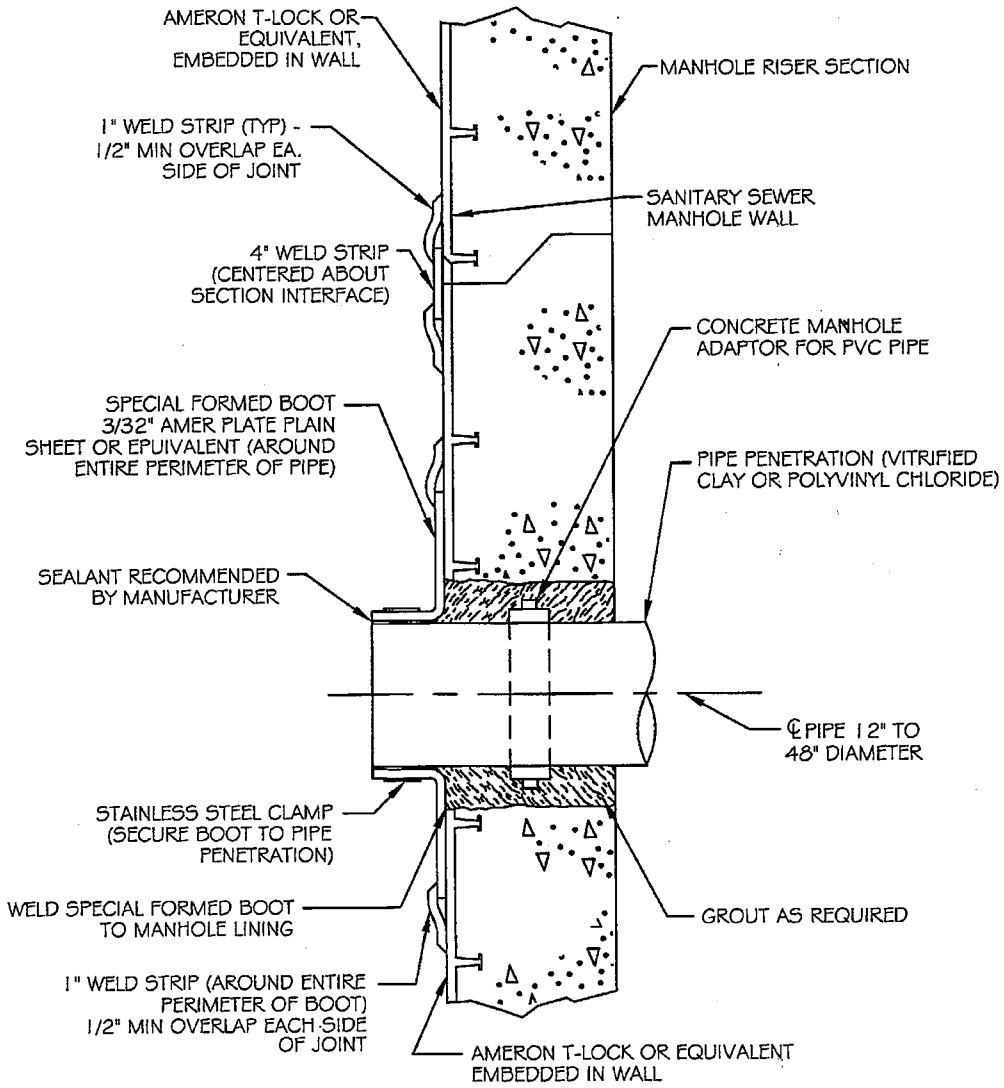

PIPE PENETRATION DETAIL

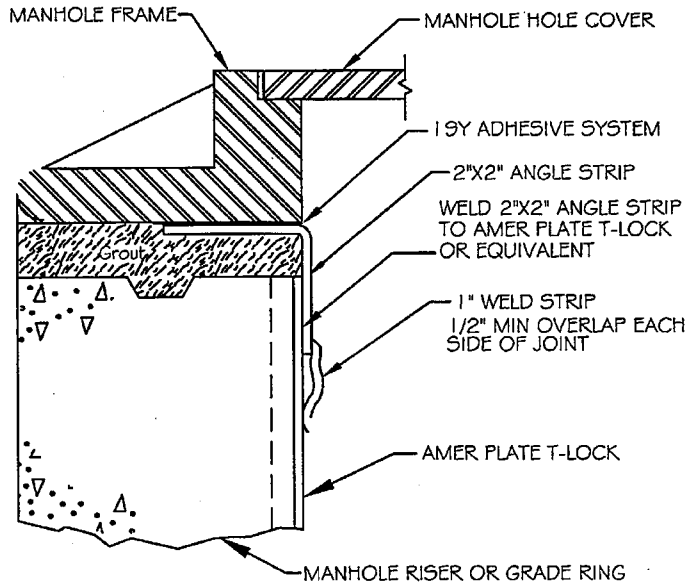

NOTE:
2" X 2" ANGLE STRIP TO BE ATTACHED TO MANHOLE FRAME USING 19Y ADHESIVE PRIOR TO SETTING FRAME.

MANHOLE FRAME TERMINATION DETAIL

NOTE:
ALL FIELD JOINTS FOR T-LOCK LINED MANHOLE SECTIONS SHALL BE TYPE P-1 JOINTS WITH 4" WELD STRIP WITH 2-1" WELD STRIPS SECURING THE JOINT STRIP IN PLACE.

DETAIL NO.					DETAIL NO.
C-409 NTS	CITY OF CHANDLER STANDARD DETAIL	**PIPE PENETRATION AND MANHOLE FRAME TERMINATION DETAIL**	APPROVED: CITY ENGINEER DATE: 01/08/09		**C-409** NTS

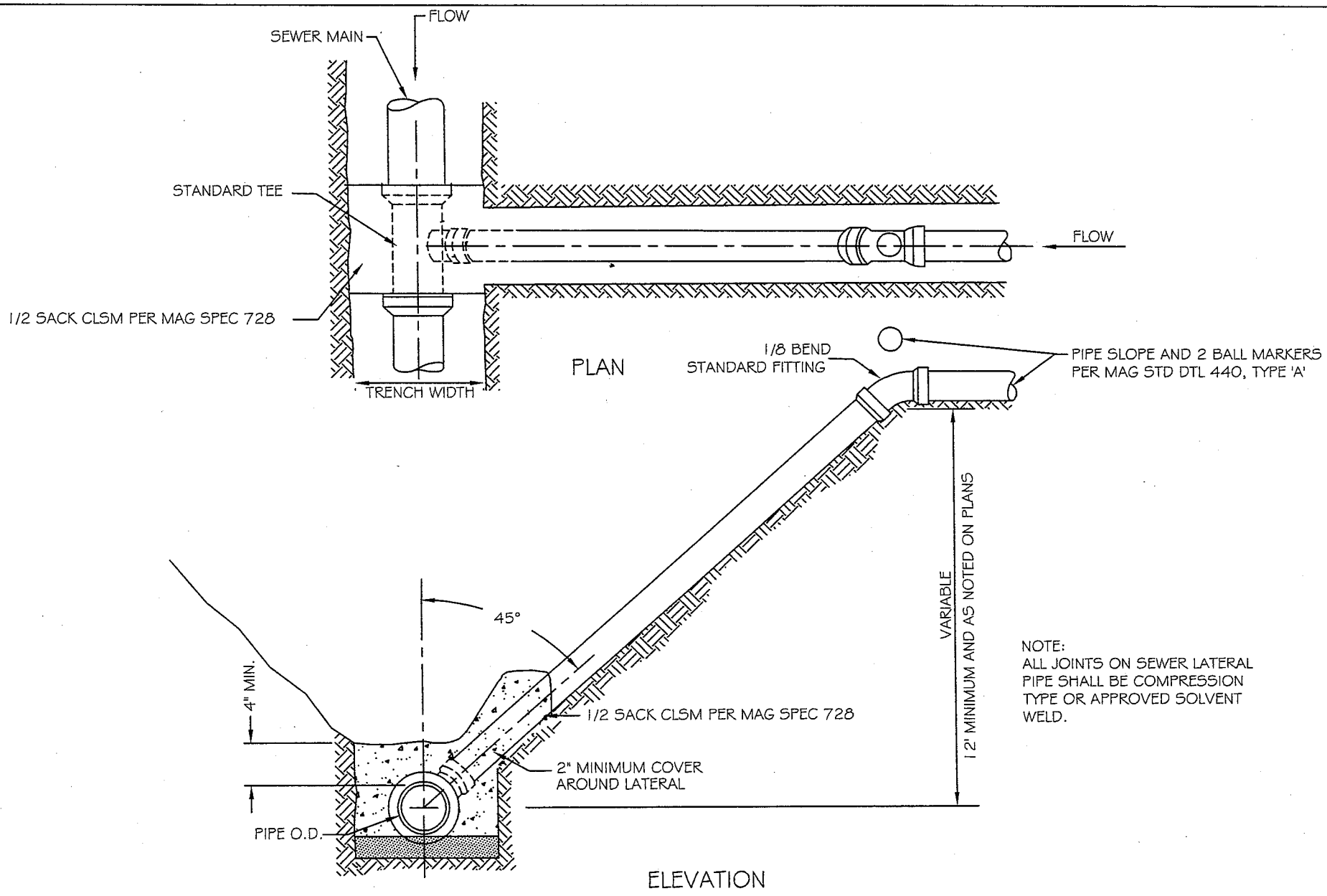

NOTE:
ALL JOINTS ON SEWER LATERAL PIPE SHALL BE COMPRESSION TYPE OR APPROVED SOLVENT WELD.

DETAIL NO.					
C-410	CITY OF CHANDLER STANDARD DETAIL	**DEEP CUT SEWER CONNECTION (SEWER LATERAL)**	APPROVED: CITY ENGINEER	DETAIL NO.	
NTS			DATE: 01/14/10	**C-410**	
				NTS	

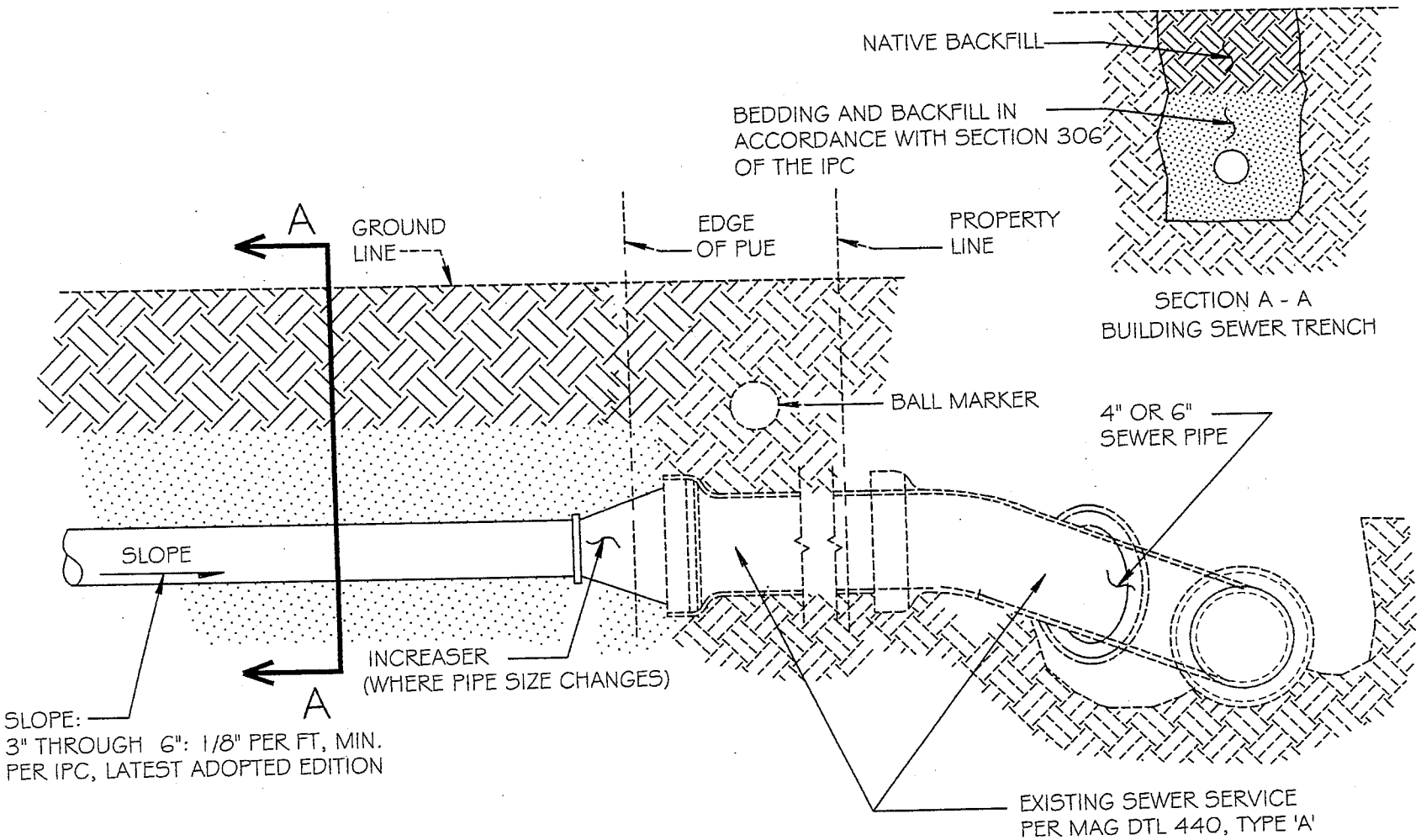

NOTES:

1. ALL CONSTRUCTION SHALL BE IN ACCORDANCE WITH THE INTERNATIONAL PLUMBING CODE (IPC), LATEST ADOPTED EDITION.
2. NO PIPE SHALL BE BACKFILLED UNTIL THE LINE HAS BEEN INSPECTED AND APPROVED BY THE DEVELOPMENT INSPECTOR.

DETAIL NO. **C-411** NTS	CITY OF CHANDLER STANDARD DETAIL	**BUILDING SEWER CONNECTION**	APPROVED: CITY ENGINEER DATE: 01/14/10	DETAIL NO. **C-411** NTS

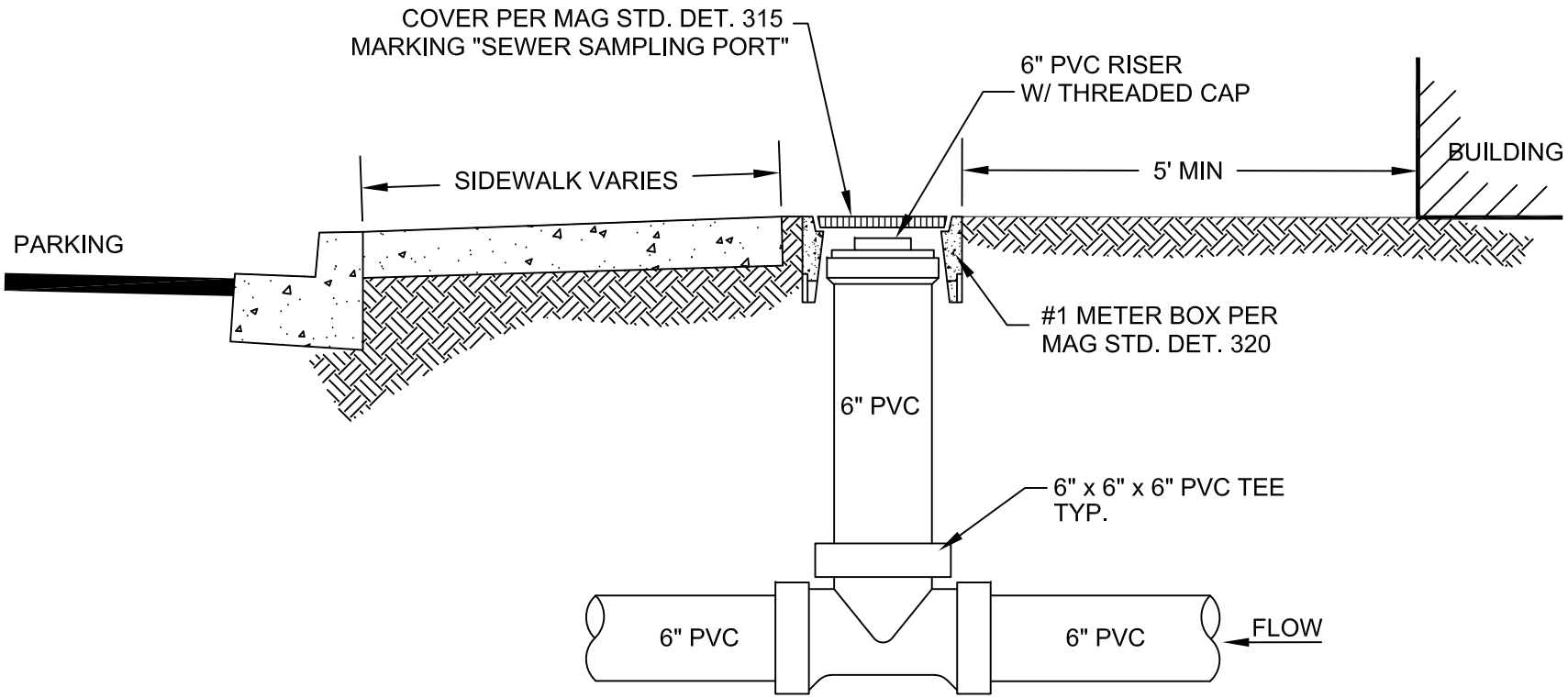

NOTES:

1. CONSTRUCTION SHALL MEET INTERNATIONAL PLUMBING CODE REQUIREMENTS.

DETAIL NO.					DETAIL NO.
C-412	CITY OF CHANDLER STANDARD DETAIL	**6" SEWER SAMPLING PORT**	APPROVED: CITY ENGINEER		**C-412**
NTS			DATE: 05-10-2018		NTS

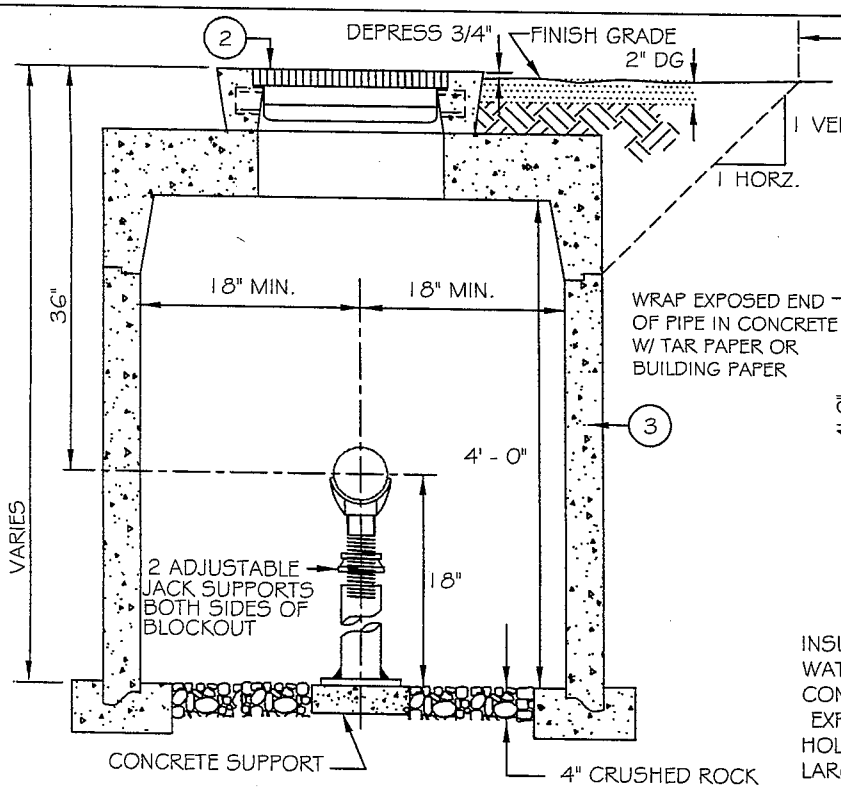

SECTION A-A

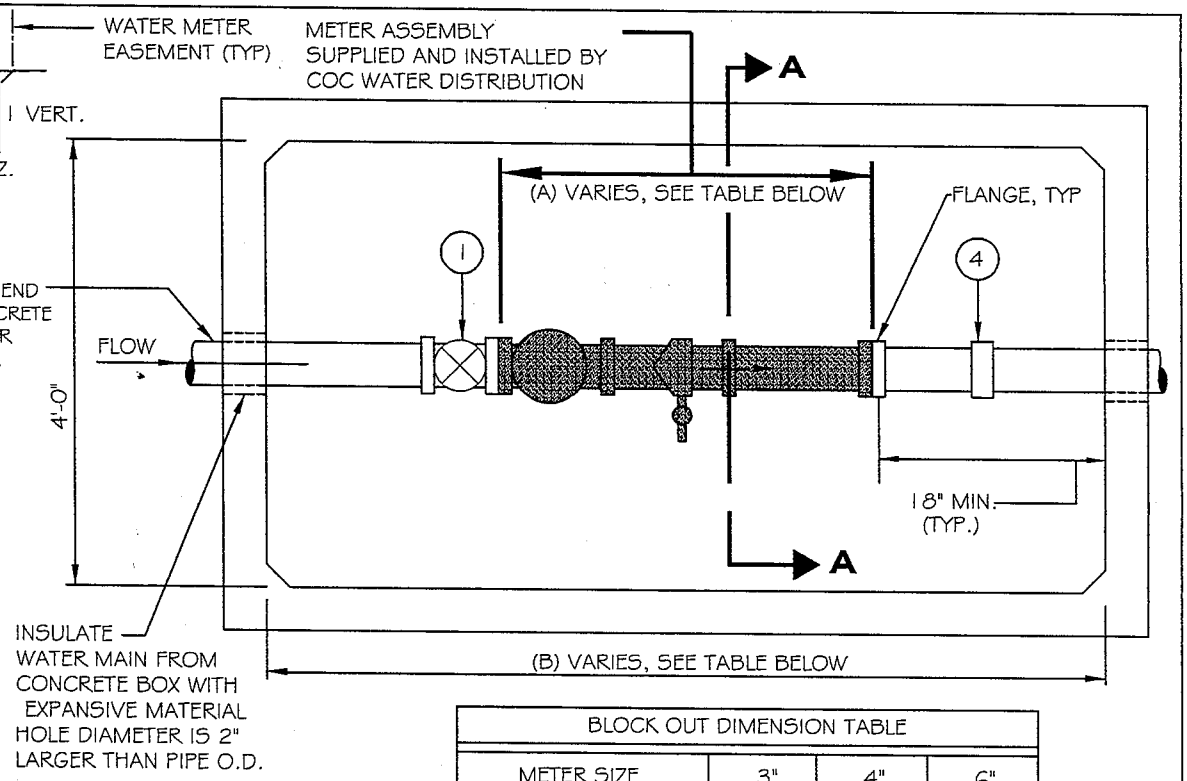

BLOCK OUT DIMENSION TABLE			
METER SIZE	3"	4"	6"
METER ASSEMBLY (A) BLOCK OUT	1'- 6-3/4"	1'- 10-1/4"	2'- 3-3/4"
VAULT LENGTH (B)	4' - 8"	5' - 0"	5' - 6"

NOTES:

1. METER VAULTS MAY BE EITHER CAST-IN-PLACE OR PRE-CAST CONCRETE. SEE MAG STANDARD DETAIL 321 FOR VAULT CONSTRUCTION.
2. STAINLESS BOLTS AND NUTS REQUIRED FOR ENTIRE ASSEMBLY.
3. PIPE MAIN SHALL BE FULLY RESTRAINED BEYOND INLET AND OUTLET OF VAULT.
4. CONTRACTOR SHALL PROVIDE FLANGED SPOOL IN METER ASSEMBLY BLOCK-OUT TO PROVE CORRECT ALIGNMENT. SPOOL MAY BE SALVAGED AFTER METER INSTALLATION.
5. VAULT LID SHALL NOT BE INSTALLED UNTIL AFTER METER IS INSTALLED BY CITY. CALL (480) 782-3700.
6. CONTRACTOR SHALL DRILL 1-3/4" DIAMETER HOLE IN CENTER OF HATCH.

LEGEND:

1. O.S. & Y. GATE VALVE, FLANGED WITH HAND WHEEL OPEN LEFT, AND RISING STEM.
2. METER HATCH PER SYRACUSE CASTINGS "CH-AL" STYLE PEDESTRIAN RATED ALUMINUM WITH SLAM LOCK OR APPROVED EQUAL. CH-5AL 42" X 42"
3. METER VAULT PER UTILITY VAULT COC STANDARD DETAIL OR APPROVED EQUAL.
4. PROVIDE 1" TO 1-1/2" OF PLAY IN THE FLEX COUPLING - CAULDER OR EQUAL.

DETAIL NO. C-416 NTS	CITY OF CHANDLER STANDARD DETAIL	3" THROUGH 6" RECLAIMED WATER METER VAULT	APPROVED: CITY ENGINEER DATE: 01-27-11	DETAIL NO. C-416 NTS

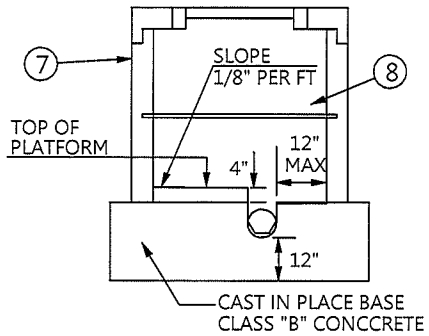

SECTION

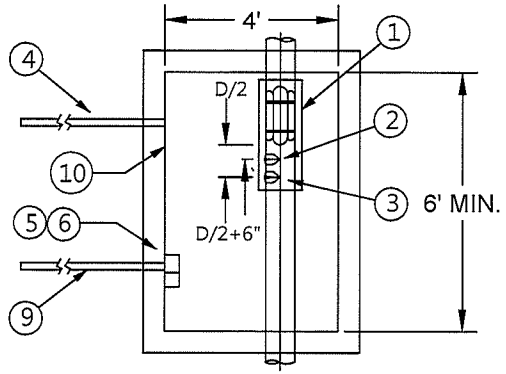

PLAN VIEW WITH COVER REMOVED

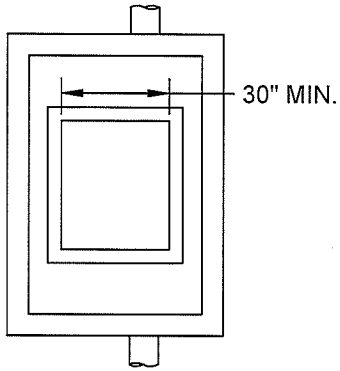

TOP VIEW

CONSTRUCTION NOTES

1. FLUME INSERT (IF REQUIRED).
2. 1/4" 316 SST BUBBLE PIPE IN RECESS.
3. 3/8" 316 SST SAMPLE PIPE IN RECESS.
4. 2" SCH 40 PVC CONDUIT (FOR SAMPLE AND BUBBLE TUBING) WITH THREADED FITTING AND CAP - SEE DETAIL C-417 (PAGE 2) FOR CONTINUATION
5. 120 VAC JUNCTION BOX (EXPLOSION PROOF)-TO BE INSTALLED WITH FLUME.
6. JUNCTION BOX WITH APHENOL CONNECTOR FOR 4-20 MA OUTPUT OR PULSE OUTPUT - TO BE INSTALLED WITH FLUME.
7. PRECAST CONCRETE VAULT AND COVER. ALL VAULTS EXCEEDING HEIGHT OF 5 FEET SHALL BE DESIGNED BY THE APPROPRIATE DESIGN PROFESSIONAL(S).
8. INSTALL 3/4" DIA. 316 SST BAR 24" ABOVE TOP OF PLATFORM AT LOCATION RECOMMENDED BY MANUFACTURER - TO BE WITH FLUME.
9. PROVIDE CONDUIT AND PULL WIRE FOR FUTURE 120 VAC - 30 AMP SERVICE (SEE DETAIL C-417 (PAGE 2) FOR CONTINUATION.
10. INSIDE OF VAULT AND CONCRETE BASE SHALL BE SPRAYED WITH A CITY APPROVED RESIN.

NOTES

1. MINIMUM INSIDE DIMENSIONS OF VAULT SHALL BE 48 INCHES WIDE BY 72 INCHES LONG WITH A MINIMUM HEIGHT OF 42" FROM THE TOP OF THE PLATFORM. ANY MODIFICATIONS TO THESE REQUIREMENTS WILL NEED TO BE REVIEWED AND APPROVED BY COC.
2. ACCESS TO THE VAULT SHALL BE BY A BILCO-STYLE DOOR WITH AN INSIDE OPENING OF AT LEAST 30 INCHES. LOAD SPECIFICATION WILL DEPEND ON INSTALLATION.
3. THE SEWER UPSTREAM OF THE VAULT SHALL BE STRAIGHT FOR LENGTH UPSTREAM OF THE VAULT EQUAL TO AT LEAST 25 PIPE DIAMETERS AND SLOPE OF UPSTREAM SEWER SHALL NOT EXCEED 1%.
4. THE TOP OF THE VAULT SHALL BE BETWEEEN 3 AND 12 INCHES ABOVE FINISHED GRADE.
5. THE HEIGHT OF THE VAULT SHALL NOT EXCEED 18 FEET.
6. THE ELECTRICAL JUNCTION BOX REQUIRES A CITY PERMIT BEFORE CONSTRUCTION BEGINS.

DETAIL NO.					
C-417	CITY OF CHANDLER STANDARD DETAIL	**INDUSTRIAL MONITORING VAULT DETAILS**	APPROVED: CITY ENGINEER	DETAIL NO. **C-417**
NTS			DATE: 07-09-2015	PAGE 1 OF 2

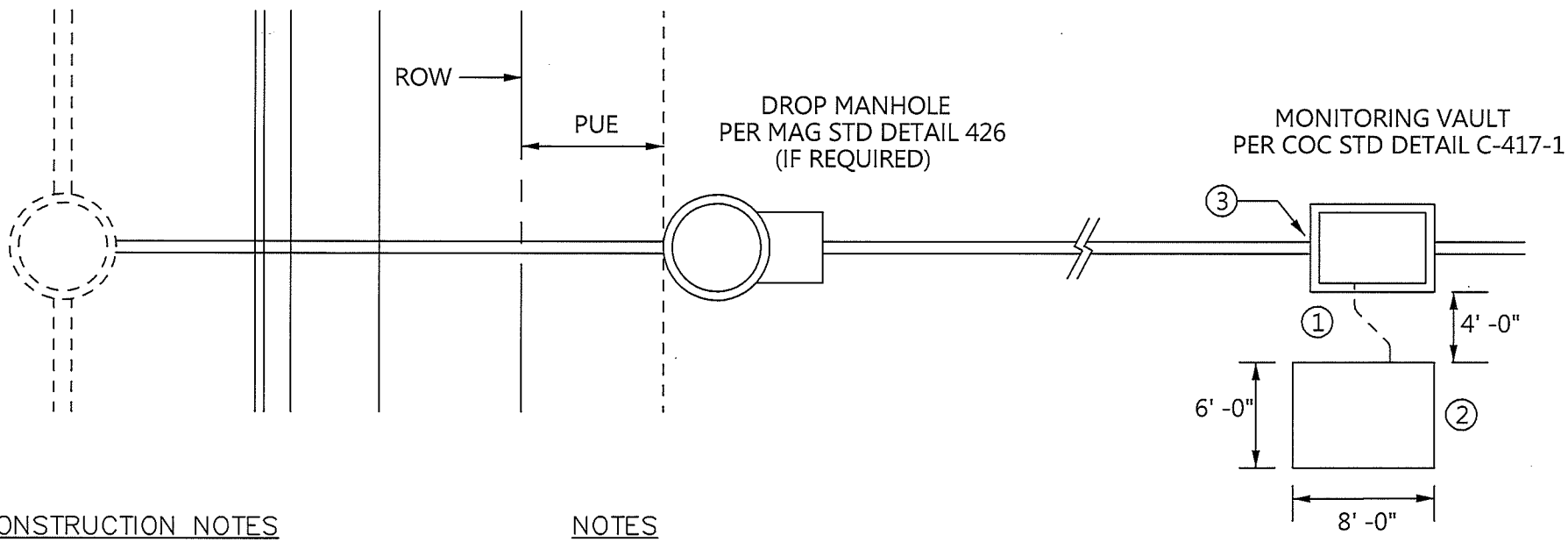

CONSTRUCTION NOTES

1. PROVIDE CONDUIT WITH PULL WIRES FOR FUTURE 120 VAC 30 AMP SERVICE FROM VAULT TO SLAB.

2. PROVIDE 4" THK CONCRETE PAD.

3, PROVIDE MINIMUM OF 1 INCH DROP AT THE DOWNSTREAM END OF THE VAULT.

NOTES

1. PROVIDE CONDUIT AND PULL WIRES TO CONCRETE PAD FOR FUTURE 120 VAC 30 AMP SERVICE.

2. DISTANCE FROM TOP OF VAULT TO TOP OF CONCRETE PLATFORM SHALL BE 5 FT. OR LESS UNLESS OTHERWISE APPROVED BY COC STAFF.

3. COORDINATE SITE PLAN WITH COC PRETREATMENT MONITORING STAFF.

4. TERMINATE ALL CONDUIT WITH AIR TIGHT SERVICE CAPS ABOVE FINISHED GRADE.

DETAIL NO.					DETAIL NO.
C-417	CITY OF CHANDLER STANDARD DETAIL	**INDUSTRIAL MONITORING VAULT SITE PLAN**	APPROVED: CITY ENGINEER		**C-417**
NTS			DATE: 1-9-14.		PAGE 2 OF 2

STORM SEWER & DRAINAGE
C-500 TO C-509

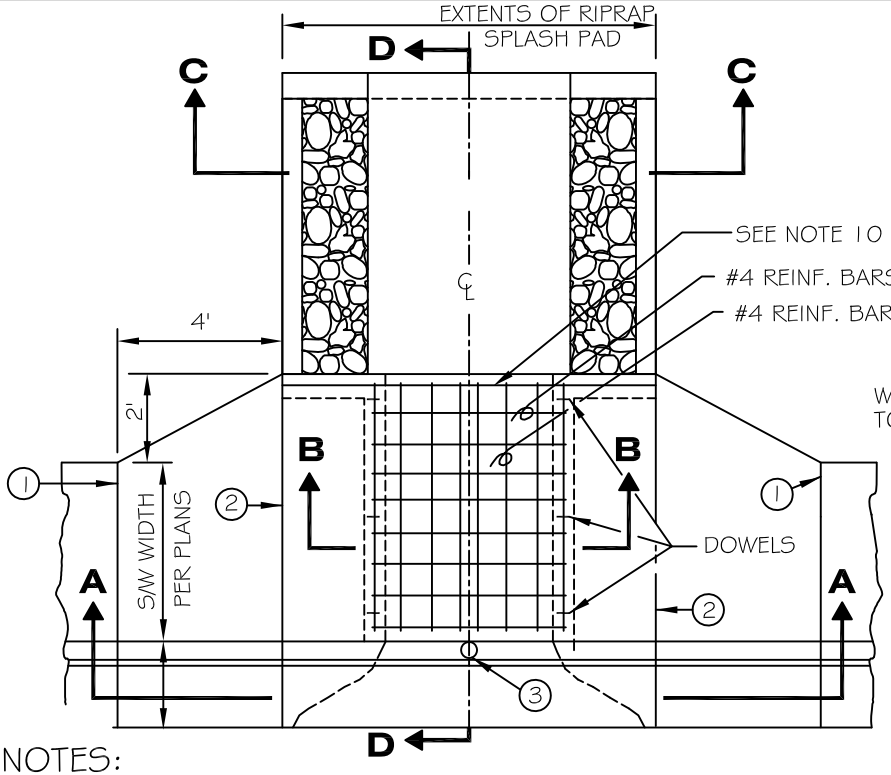

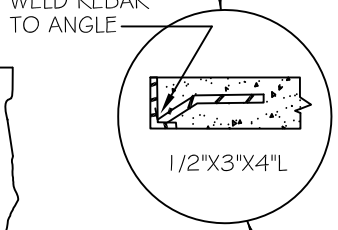

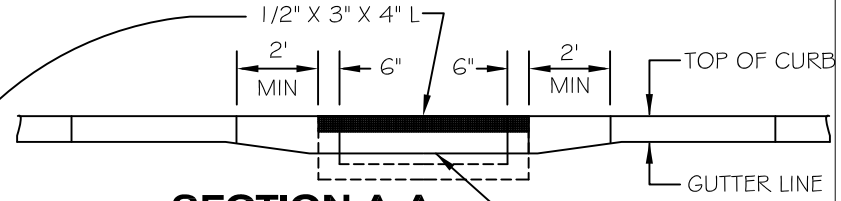

SECTION A-A

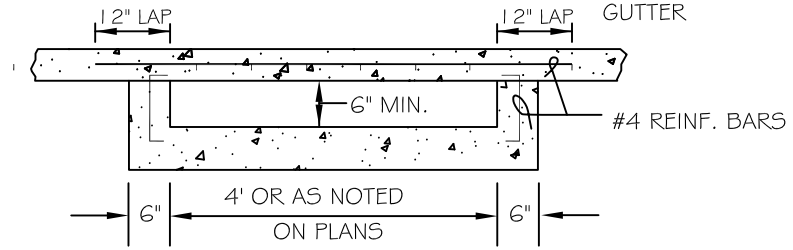

SECTION B-B

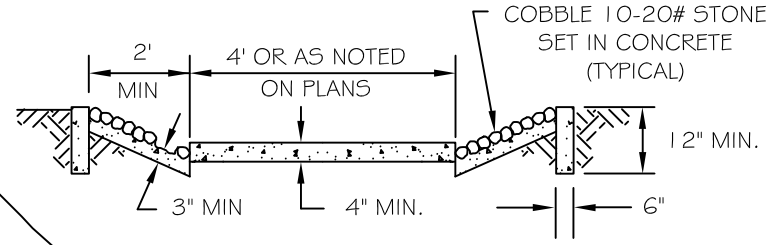

SECTION C-C

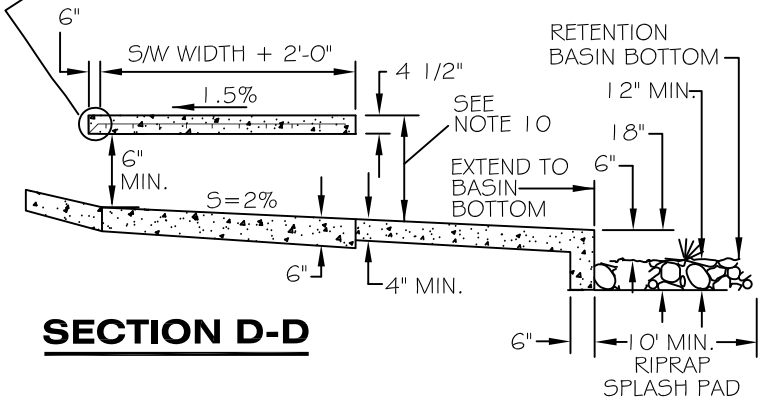

SECTION D-D

NOTES:

1. FULL DEPTH EXPANSION JOINT EXTENDED THROUGH CURB AND GUTTER (TYP.). EXPANSION JOINT FILLER SHALL BE 1/2" BITUMINOUS PRE FORMED EXPANSION JOINT FILLER ASTM D-1751. (FULL DEPTH).
2. CONTRACTION JOINT.
3. STORM DRAIN INLET MARKER PER C-508.
4. FOR OPENINGS GREATER THAN 4 FT., SEPARATE CHAMBERS WILL BE CONSTRUCTED IN 4 FT. INCREMENTS WITH A CONTRACTION JOINT OVER EACH INTERIOR SUPPORT.
5. STEEL MAT TO BE SUPPORTED ON CHAIRS PRIOR TO CONCRETE PLACEMENT. MINIMUM CONCRETE COVER TO BE 1 1/2" OVER REINFORCING BAR.
6. EXPOSED ANGLE IRON TO BE PAINTED WITH ONE SHOP COAT OF NO. 1-D PAINT AND TWO FIELD COATS OF NO. 10 PAINT AS PER MAG SECT. 790.
7. 6" - 12" COBBLE TO BE USED FOR SPLASH PAD.
8. TOP SHALL BE MONOLITHIC INCLUDING 4' WINGS.
9. CONCRETE SHALL BE CLASS 'A' PER MAG SECTION 725
10. A SAFETY RAIL PER MAG STD. DTL. 145 IS REQUIRED WHEN DROP EXCEEDS 30".

DETAIL NO.					DETAIL NO.
C-500	CITY OF CHANDLER STANDARD DETAIL	**SCUPPER**	APPROVED: CITY ENGINEER		**C-500**
NTS			DATE: 01-09-2020		NTS

8'x8'x6" MAG CLASS B CONCRETE PAD REQUIRED IN DG-LANDSCAPED AREAS. SEVEN #3 BARS 12" C TO C EACH WAY. SLOPE DOWN FROM GRATE TO DG SURFACE 1½".

1. MODIFIED FLAT-BOTTOM MANHOLE CONE. MORTAR TO C.I. RING
2. MIN. 30" DIA. BOLTED C.I. RING AND GRATE.
3. MIN. 30" DIA. BOLTED C.I. RING AND COVER WITH THE RAISED LETTERS 'STORMWATER ONLY'.
4. GRADED PARKWAY, OR A.C. PAVING.
5. COMPACTED ABC IN PAVED AREAS.
6. DEBRIS SHIELD: ROLLED 16 GA. x 24" LENGTH W/ VENTED ANTI-SIPHON AND INTERNAL 0.265" MAX. SWO FLATTENED EXPANDED STEEL SCREEN x 12" LENGTH, FUSION-BONDED EPOXY.
7. PRECAST CONCRETE LINER, 4000 PSI 48" ID, 54" OD.
8. MIN. 6' DIA. DRILLED SHAFT.
9. SUPPORT BRACKET (TYP), FORMED 12 GA. STEEL FUSION BONDED EPOXY COATED
10. 6" DIA. SCHEDULE 40 PVC OVERFLOW PIPE.
11. 6" DIA. CORRUGATED HDPE PER MAG SECT. 738 INJECTION PIPE. NO PERFORATIONS BELOW SETTLING CHAMBER.
12. NONWOVEN GEOTEXTILE FABRIC MIRIFI 140NL OR APPROVED EQUAL PLACED AFTER OVERFLOW PIPE HAS BEEN INSTALLED. RETAIN WITH A FEW SPRINKLES OF ROCK AROUND PERIMETER.
13. 3/8" TO 1-1/2" WASHED ROCK.
14. DRAINAGE SCREEN: SCH. 40 PVC 0.12" SLOTTED WELL SCREEN 32 SLOTS PER ROW/FT.
15. MIN. 4' DRILLED SHAFT.
16. FABRIC SEAL, UV RESISTANT GEOTEXTILE. COVER GRATE UNTIL UNTIL PAVING AND/OR LANDSCAPING IS COMPLETE.
17. 4" DIA. SCH. 40 PVC CONNECTOR PIPE W/ VENTED ANTI-SIPHON INTAKE & FLOW REGULATOR.
18. MIN. 4 QUART CAPACITY ABSORBENT.
19. 1 SACK ABC SLURRY EXCEPT IN LANDSCAPED INSTALLATIONS WITH NO PIPE CONNECTIONS.
20. 8 PERFORATIONS PER LINEAR FOOT FOR BOTTOM 3 FEET OF INJECTION CHAMBER.
21. 6 MIL PLASTIC LINER WATER STOP.
22. INTAKE SCREEN, SCH 40 PVC 0.12" MODIFIED SLOTTED WELL SCREEN WITH 32 SLOTS PER ROW/FT. 48" OVERALL LENGTH WITH TRI-C END CAP.

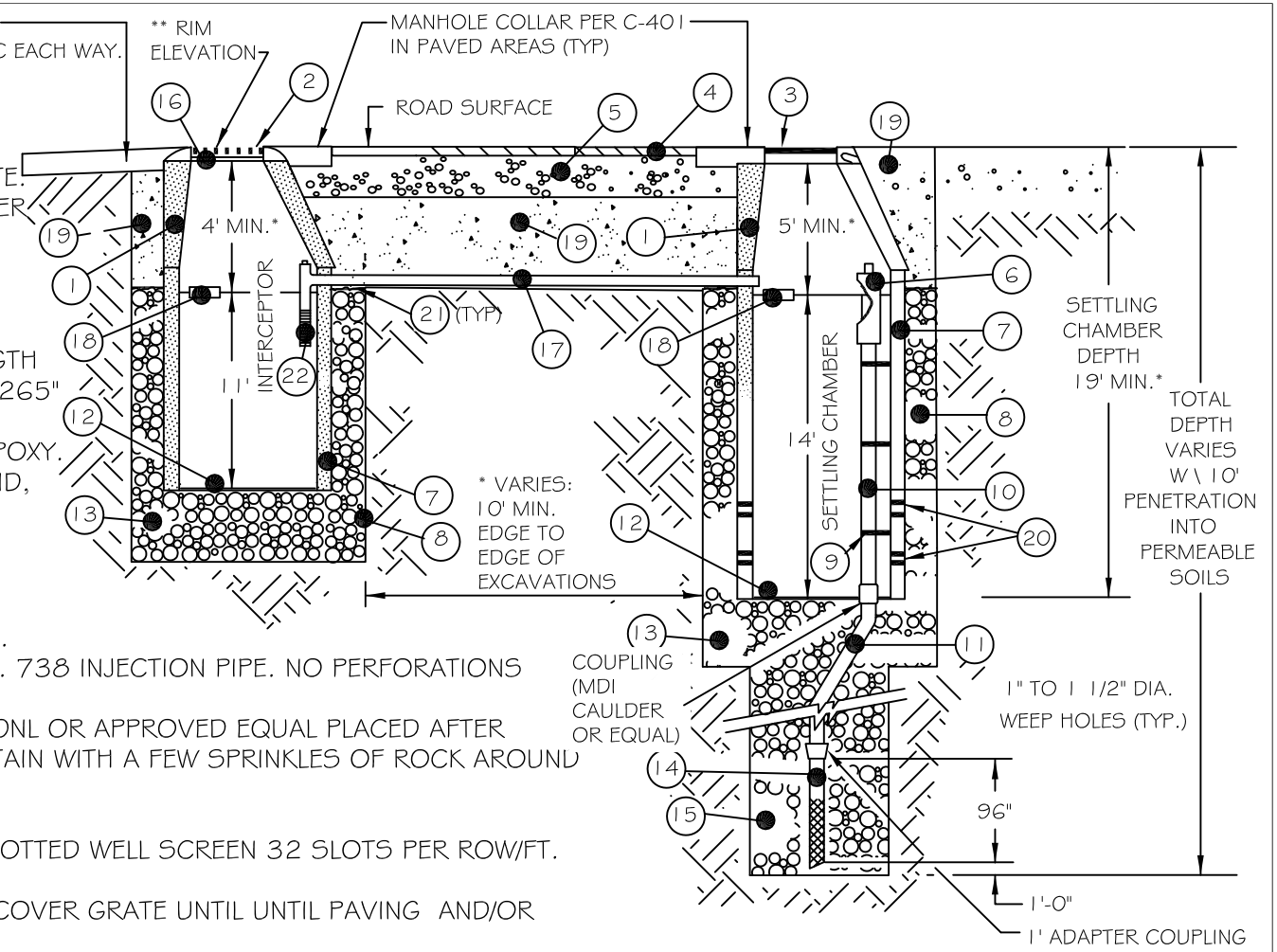

* NOTE - OVERFLOW DEPTHS AND INVERT OF CONNECTOR PIPE MUST BE BELOW THE INVERTS OF ALL UPSTREAM STORM DRAIN PIPE.

** NOTE - RIM ELEVATION SHALL BE FLUSH TO ROAD SURFACE OR TURF. RIM ELEVATION SHALL BE 1½" ABOVE DECOMPOSED GRANITE (DG) LANDSCAPED AREAS.

BASED UPON 'MAXWELL PLUS' BY TORRENT RESOURCES

DETAIL NO.					DETAIL NO.
C-501	CITY OF CHANDLER STANDARD DETAIL	**DRYWELL SYSTEM DETAIL AND SPECIFICATIONS**	APPROVED: CITY ENGINEER		**C-501**
NTS			DATE: 05-10-2018		NTS

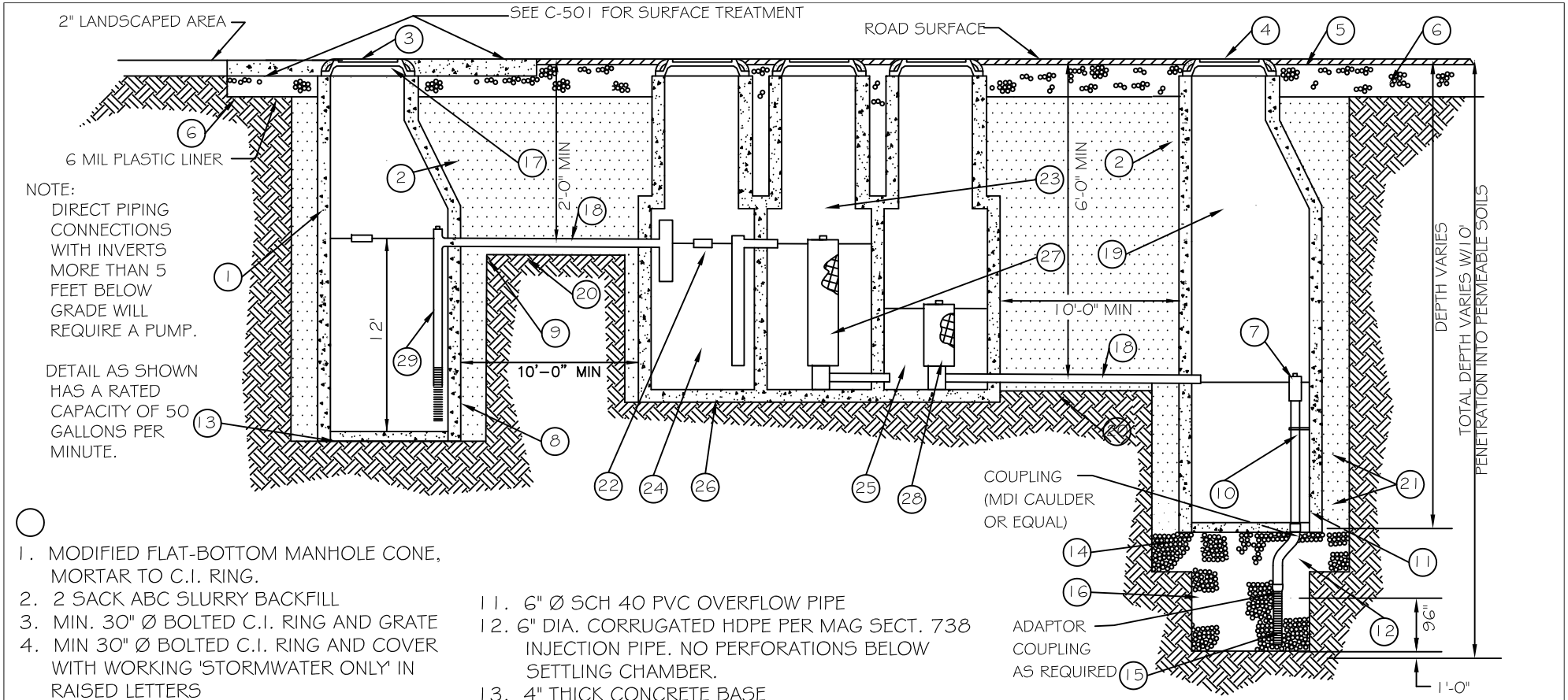

1. MODIFIED FLAT-BOTTOM MANHOLE CONE, MORTAR TO C.I. RING.
2. 2 SACK ABC SLURRY BACKFILL
3. MIN. 30" Ø BOLTED C.I. RING AND GRATE
4. MIN 30" Ø BOLTED C.I. RING AND COVER WITH WORKING 'STORMWATER ONLY' IN RAISED LETTERS
5. GRADED BASIN OR PAVING
6. COMPACTED ABC IN PAVED AREAS
7. DEBRIS SHIELD: ROLLED 16 GA. x 24" LENGTH W/ VENTED ANTI-SIPHON AND INTERNAL 0.265" MAX. SWO FLATTENED EXPANDED STEEL SCREEN x 12" LENGTH, FUSION-BONDED EPOXY.
8. PRECAST CONCRETE LINER, 4000 PSI 48" ID. 54" OD
9. MIN 6" DRILLED SHAFT
10. SUPPORT BRACKET, FORMED 12 GA. STEEL. FUSION BONDED EPOXY COATED STEEL.
11. 6" Ø SCH 40 PVC OVERFLOW PIPE
12. 6" DIA. CORRUGATED HDPE PER MAG SECT. 738 INJECTION PIPE. NO PERFORATIONS BELOW SETTLING CHAMBER.
13. 4" THICK CONCRETE BASE
14. 3/8" TO 1 1/2" WASHED ROCK
15. DRAINAGE SCREEN: SCH. 40 PVC 0.12" SLOTTED WELL SCREEN 32 SLOTS PER ROW/FT.
16. MIN 4' Ø DRILLED SHAFT
17. FABRIC SEAL, UV RESISTANT GEOTEXTILE. COVER GRATE UNTIL PAVING AND/OR LANDSCAPING IS COMPLETE.
18. 4" Ø SCH. 40 PVC CONNECTOR PIPE
19. (NOT USED)
20. SLURRY BACKFILL
21. (NOT USED)
22. ABSORBENT - HYDROPHOBIC IMBIBER PILLOW, MIN. 128 OZ. CAPACITY
23. FILTRATION CHAMBER - MIN 833 GAL. CAPACITY
24. PRIMARY SEPARATOR CHAMBER - MIN 833 GAL. CAPACITY
25. IMBIBATION CHAMBER - MIN 833 GAL. CAPACITY
26. TREATMENT INTERCEPTOR - MIN 2500 GAL TOTAL CAPACITY
27. SILT FILTER (2 EACH) - MIN 3600 S.I. POLYPROPYLENE FABRIC MESH
28. FASTFLO ASSEMBLY (2 EACH) - HYDROPHOBIC IMBIBER BEAD DRAIN FIELD
29. OVERFLOW PIPE - 4" Ø SCH 40 PVC WITH ANTI-SIPHON VENT, FLOW REGULATOR AND SCREEN.

BASED UPON 'ENVIBRO 20' BY TORRENT RESOURCES

DETAIL NO.					DETAIL NO.
C-502	CITY OF CHANDLER STANDARD DETAIL	**PRETREATMENT DRYWELL SYSTEM**	APPROVED: CITY ENGINEER		**C-502**
NTS			DATE: 05-10-2018		NTS

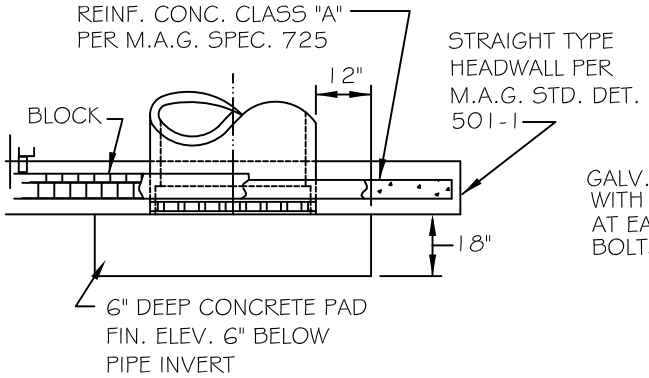

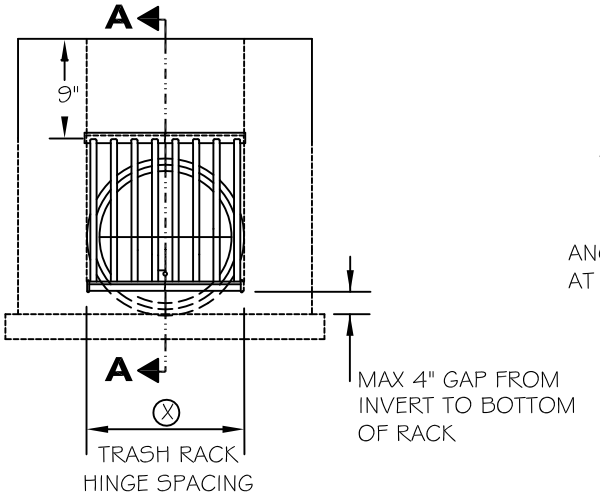

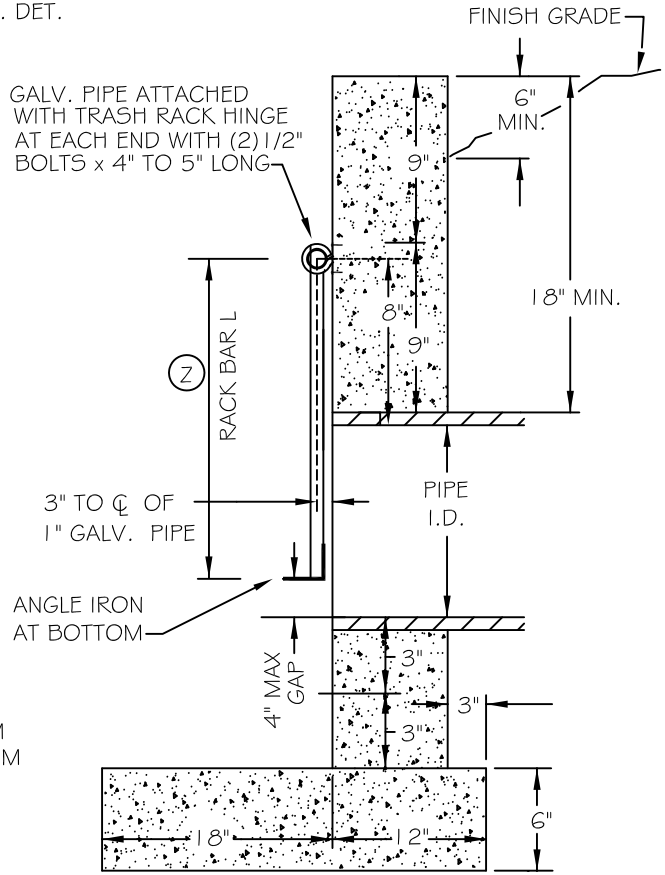

SECTION A-A

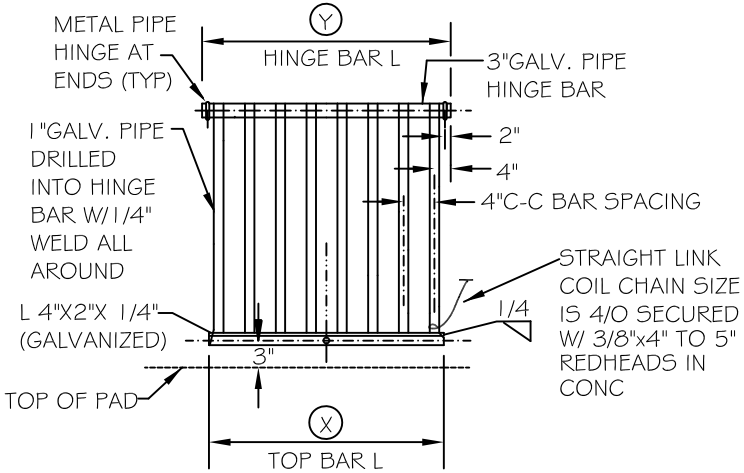

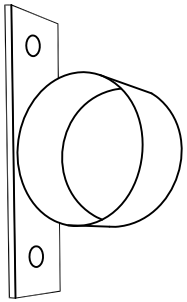

TRASH RACK HINGE

TYPICAL DIMENSIONS					
TYPE	PIPE DIA.	NO. OF BARS (I.D./4 + 1")	DIMENSIONS X	Y	Z
A	15"	5	21"	25"	PIPE DIA + 4" (TYP)
	18"	6	25"	29"	PIPE DIA + 4" (TYP)

* ROUND UP TO NEXT FULL NUMBER

	OTHER BAR SIZES	
DIMENSIONS	X =	(# BARS X 4") + 1"
	Y =	X + 4"
	Z =	I.D.+ 3"+ 8" (UP TO 4' 0)

NOTES:

1. THIS DETAIL IS APPLICABLE AT ALL OPEN ENDS OF PIPE 12" OR MORE IN DIAMETER.
2. COAT ALL WELD AREAS WITH ZINC RICH PAINT.
3. DESIGN ENGINEER TO PROVIDE DETAILS FOR PIPE I.D.'S GREATER THAN 4' IN DIAMETER.

DETAIL NO.					DETAIL NO.
C-503	CITY OF CHANDLER STANDARD DETAIL	TRASH RACK/ACCESS BARRIER	APPROVED: CITY ENGINEER		C-503
NTS			DATE: 01-09-2020		NTS

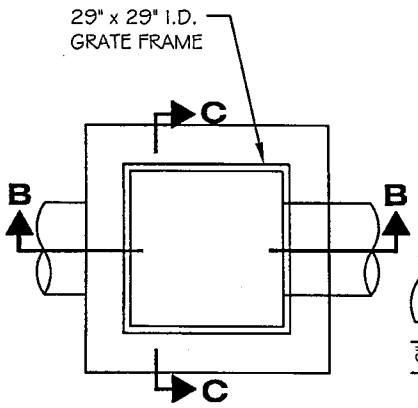

PLAN

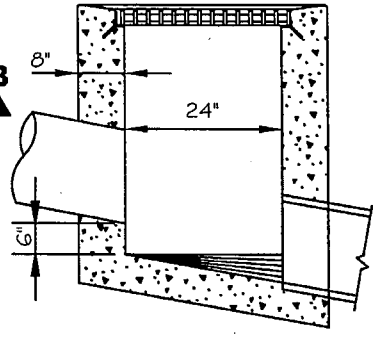

SECTION B-B

SINGLE GRATE

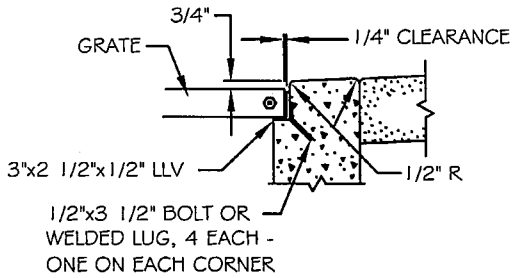

DETAIL OF ANGLE FRAME GRATE SUPPORT

ALL CONCRETE SHALL BE CLASS 'A' PER MAG SECT. 725. EXPOSED EDGES SHALL BE FINISHED WITH A 1/2" RADIUS. REINFORCE WITH #4 AT 8" EACH WAY, CENTERED.

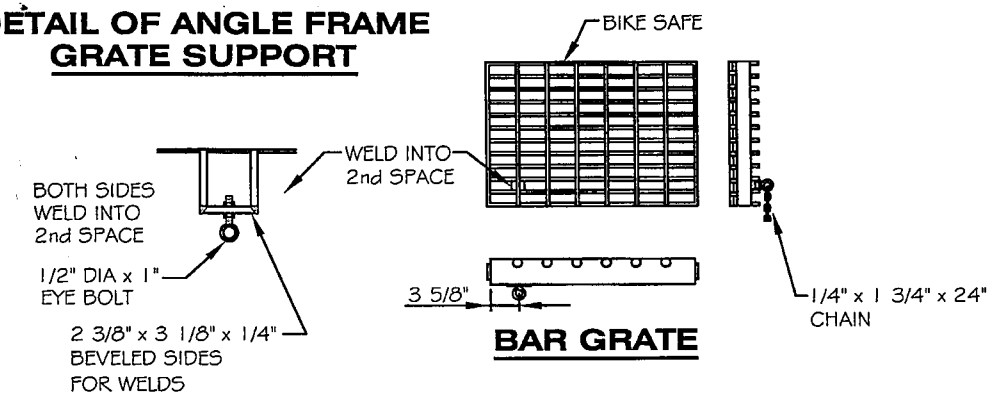

BAR GRATE

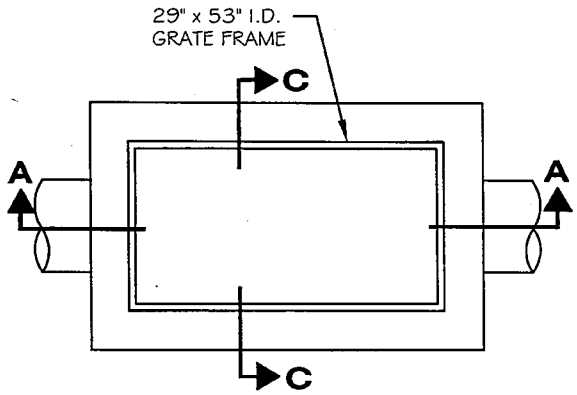

PLAN

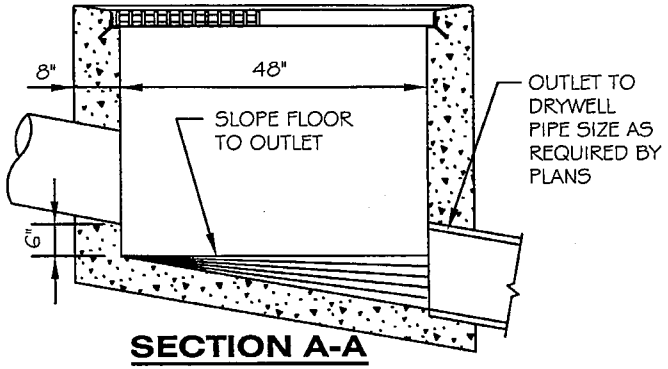

SECTION A-A

DOUBLE GRATE

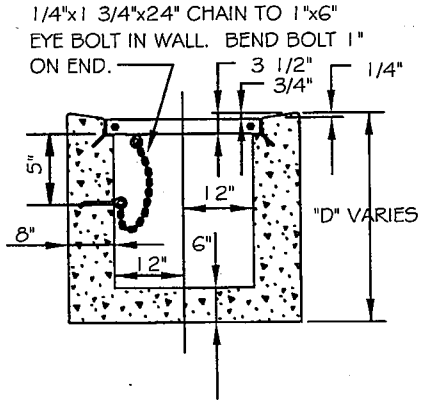

SECTION C-C

DETAIL NO.					DETAIL NO.
C-504 NTS	CITY OF CHANDLER STANDARD DETAIL	**RETENTION BASIN INLET**	APPROVED: Elizabeth W. Hamilton CITY ENGINEER DATE: January 11, 2002		**C-504** NTS

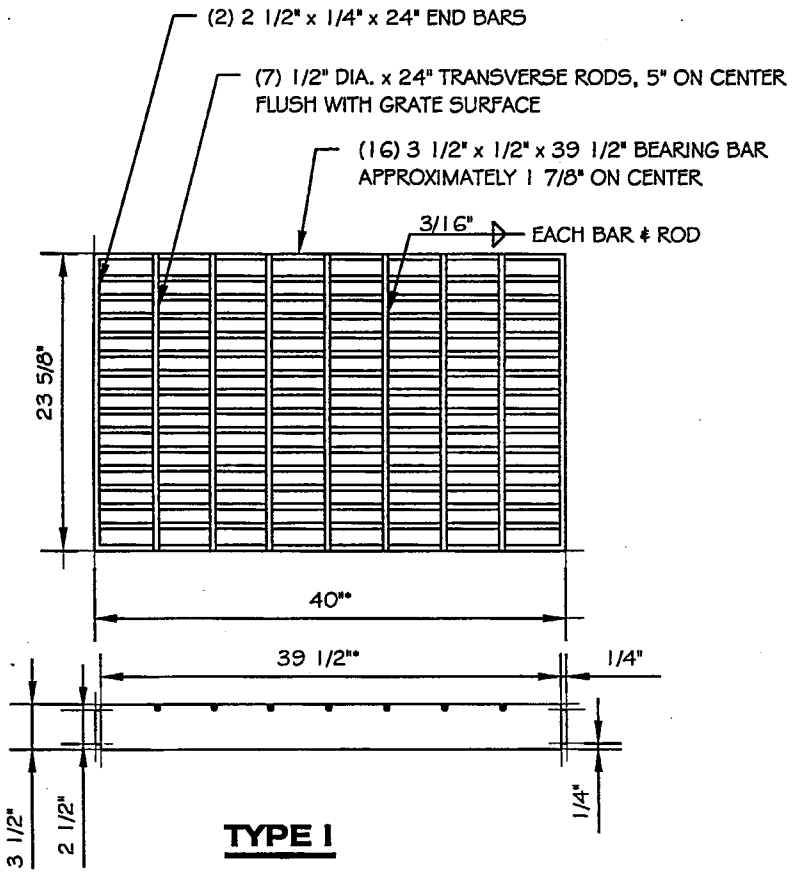

* DIMENSION WILL VARY DEPENDING UPON CATCH BASIN PIPE SIZE.

NOTES:

1. ALL STEEL SHALL BE IN ACCORDANCE WITH ASTM A-36.
2. WELDING SHALL BE IN ACCORDANCE WITH AWS SPECIFICATIONS.
3. FRAME AND GRATE SHALL BE TESTED FOR ACCURACY OF FIT AND SHALL BE MARKED IN SETS BEFORE DELIVERY.
4. THE COMPLETED ASSEMBLY SHALL BE GIVEN ONE SHOP COAT OF NO. 1 PAINT AND TWO FIELD COATS OF NO. 10 PAINT AS PER MAG SECTION 790.
5. THE GRATE SHALL BE FABRICATED TO WITHIN 1/8" OF SPECIFIED DIMENSIONS.

DETAIL NO.					DETAIL NO.
C-506	CITY OF CHANDLER STANDARD DETAIL	CATCH BASIN GRATES	APPROVED: Bruce D. Patterson CITY ENGINEER		C-506
NTS			DATE: 11-19-99		NTS

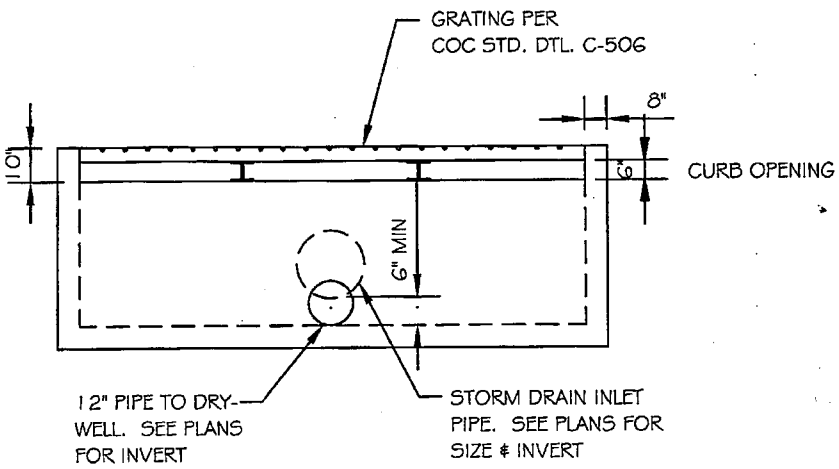

FRONT ELEVATION

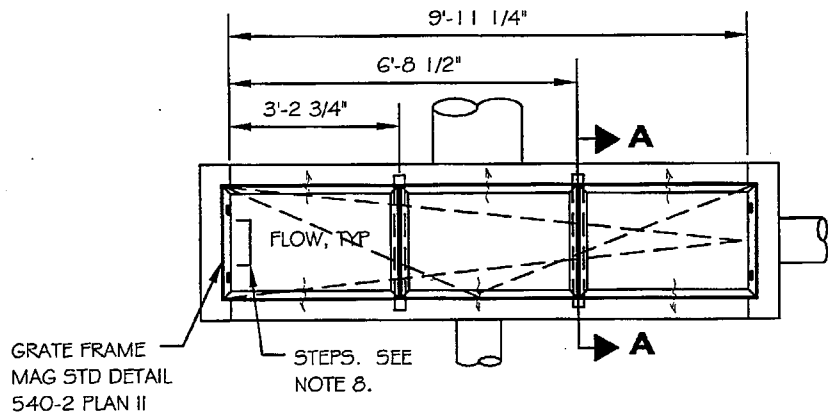

TRIPLE CATCH BASIN

NOTES:

1. ALL CONCRETE SHALL BE M.A.G. CLASS 'A'.
2. CONNECTOR PIPES MAY BE PLACED IN ANY WALL AS PER PLAN.
3. FLOOR BASIN SHALL BE TROWELLED TO A HARD, SMOOTH SURFACE AND SHALL SLOPE FROM ALL DIRECTIONS TO OUTLET.
4. CONNECTOR PIPE SHALL BE TRIMMED TO THE FINAL SHAPE AND LENGTH BEFORE CONCRETE IS POURED.
5. PLANS SHOULD SPECIFY GRATE ELEVATION AND INVERT ELEVATION.
6. RETENTION BASIN INLET MAY BE PREFABRICATED PROVIDING A SHOP DRAWING IS APPROVED BY THE ENGINEER PRIOR TO FABRICATION.
7. THE FRAME SHALL BE MAG STD DETAIL 540-2, PLAN II, GRATE PER CHANDLER DET. #C-506.

DETAIL NO.					DETAIL NO.
C-507	CITY OF CHANDLER STANDARD DETAIL	**BELOW GRADE RETENTION BASIN INLET (BUBBLER BOX)**	APPROVED: CITY ENGINEER		**C-507**
NTS			DATE: 01/08/09		PAGE 1 OF 3

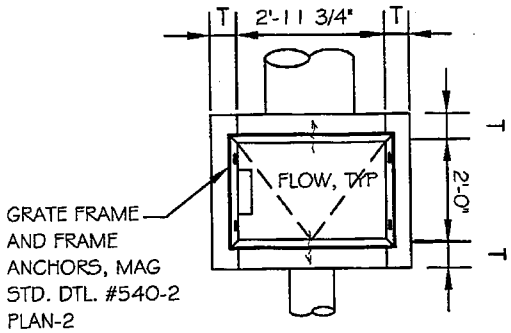

SINGLE CATCH BASIN

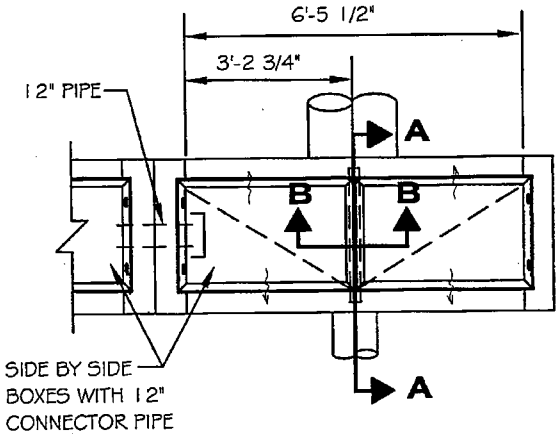

DOUBLE CATCH BASIN

NOTES: (CON'T)

8. STEPS (MAG DET. 428 POLYPROPYLENE) V = 3' (INCL) PLACE ONE STEP 12" ABOVE THE FLOOR OF THE BASIN. V OVER 3', PLACE STEPS AT 12" INTERVALS FROM THE FLOOR OF THE BASIN WITH THE TOP STEP AT 12" (MIN) BELOW THE TOP OF GRATE.
9. ALL EXPOSED METAL HARDWARE SHALL BE GIVEN ONE SHOP COAT OF NO. 1 PAINT AND 2 FIELD COATS OF NO. 10 PAINT AS PER M.A.G. SECTION 790.
10. ALL METAL UNITS SHALL BE FABRICATED FROM STRUCTURAL STEEL EXCEPT AS NOTED. STRUCTURAL STEEL SHALL BE IN ACCORDANCE WITH ASTM A-36.
11. WELDING SHALL BE IN ACCORDANCE WITH MAG WELDING SPECIFICATIONS.

DETAIL NO. C-507 NTS	CITY OF CHANDLER STANDARD DETAIL	BELOW GRADE RETENTION BASIN INLET (BUBBLER BOX)	APPROVED: CITY ENGINEER DATE: 01/08/09	DETAIL NO. C-507 PAGE 2 OF 3

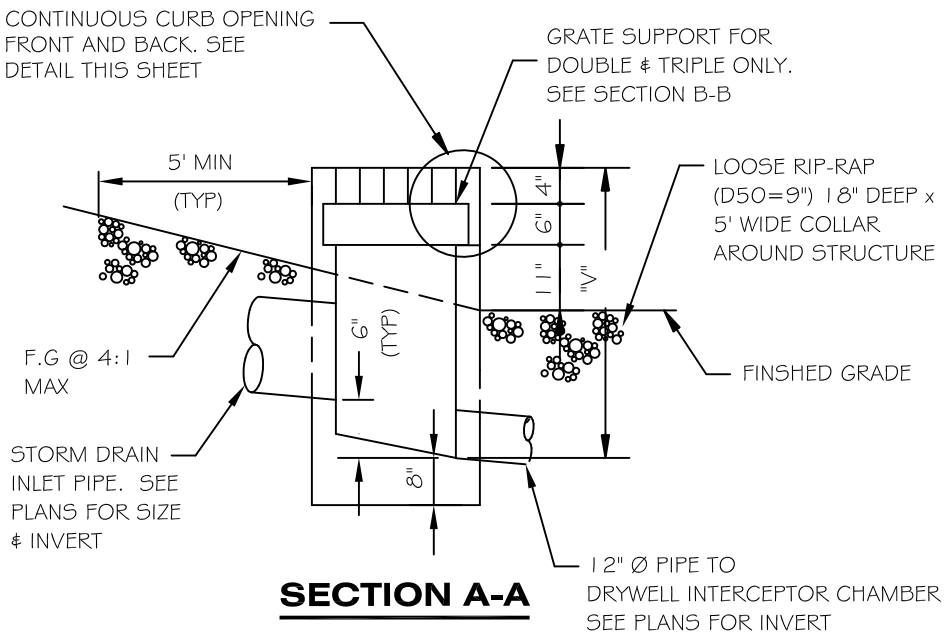

SECTION A-A

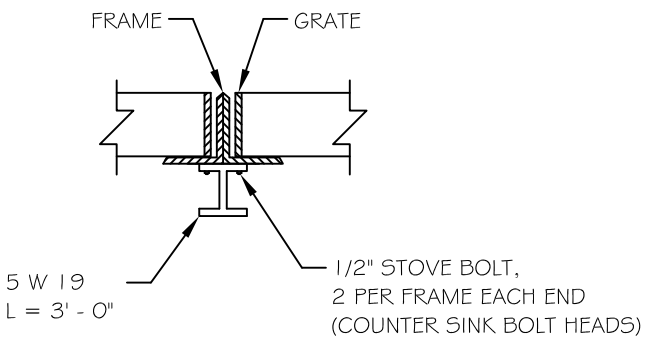

SECTION B-B

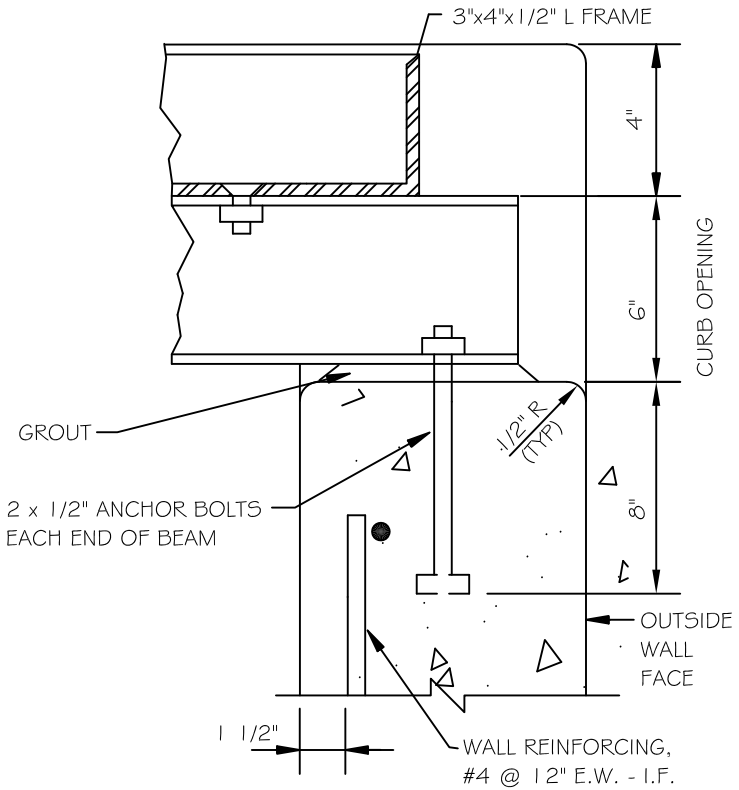

INLET CURB OPENING

CATCH BASIN WALL THICKNESS

T = 8" IF V IS UP TO 8'

(IF V EXCEEDS 8', SPECIAL DESIGN IS REQUIRED)

V = 3'-0" UNLESS OTHERWISE NOTED

DETAIL NO.					DETAIL NO.
C-507	CITY OF CHANDLER STANDARD DETAIL	**BELOW GRADE RETENTION BASIN INLET (BUBBLER BOX)**	APPROVED: CITY ENGINEER		**C-507**
NTS			DATE: 05-10-2018		PAGE 3 OF 3

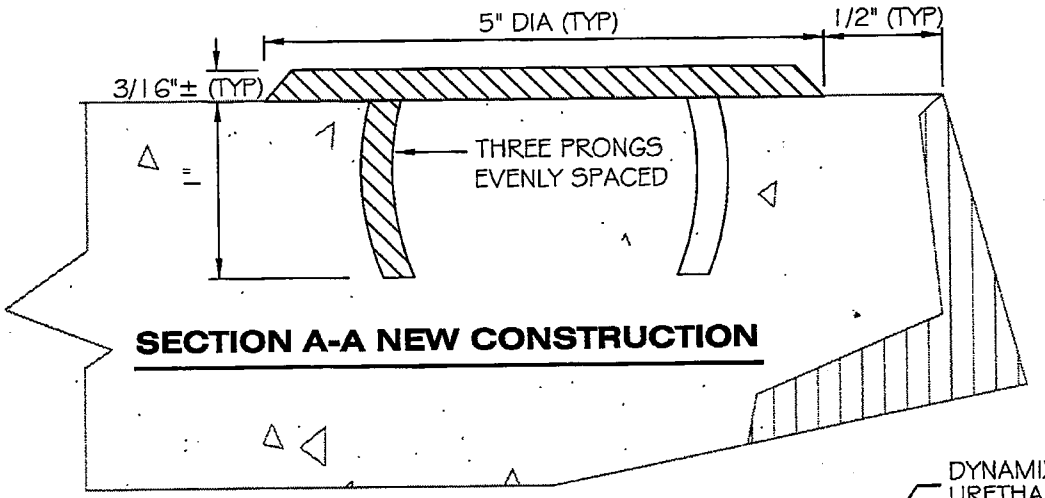

SECTION A-A NEW CONSTRUCTION

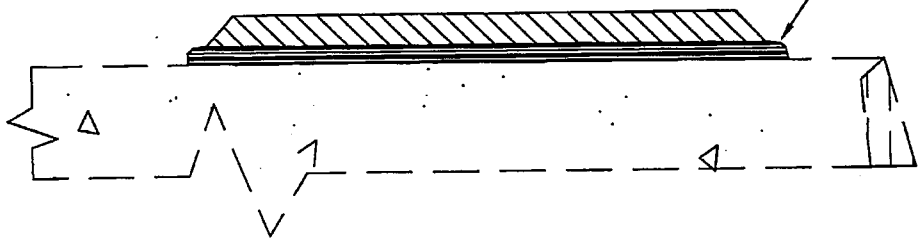

SECTION A-A EXISTING STRUCTURES

NOTES

1. MATERIAL: CAST ALUMINUM
2. THE WIDTH OF INDIVIDUAL LETTERS SHALL BE SELECTED SO THAT LETTERS AND WORDS ARE EQUALLY SPACED AND BALANCED.
3. LETTERS SHALL BE 1/2" IN HEIGHT. MARKER LAYOUT SHALL BE SUBMITTED FOR APPROVAL PRIOR TO FABRICATION.
4. MARKERS SHALL BE ALIGNED WITH THE CENTER OF DRAINAGE INLETS AT THE TOP OF CURB.

DETAIL NO.					DETAIL NO.
C-508 NTS	CITY OF CHANDLER STANDARD DETAIL	**STORM DRAIN INLET MARKER**	APPROVED: CITY ENGINEER	DATE: 01/08/07	**C-508** NTS

DIAM (D)	TRENCH SETBACK	SPACING WIDTH
96"	18"	30"
> 96"	21"	36"

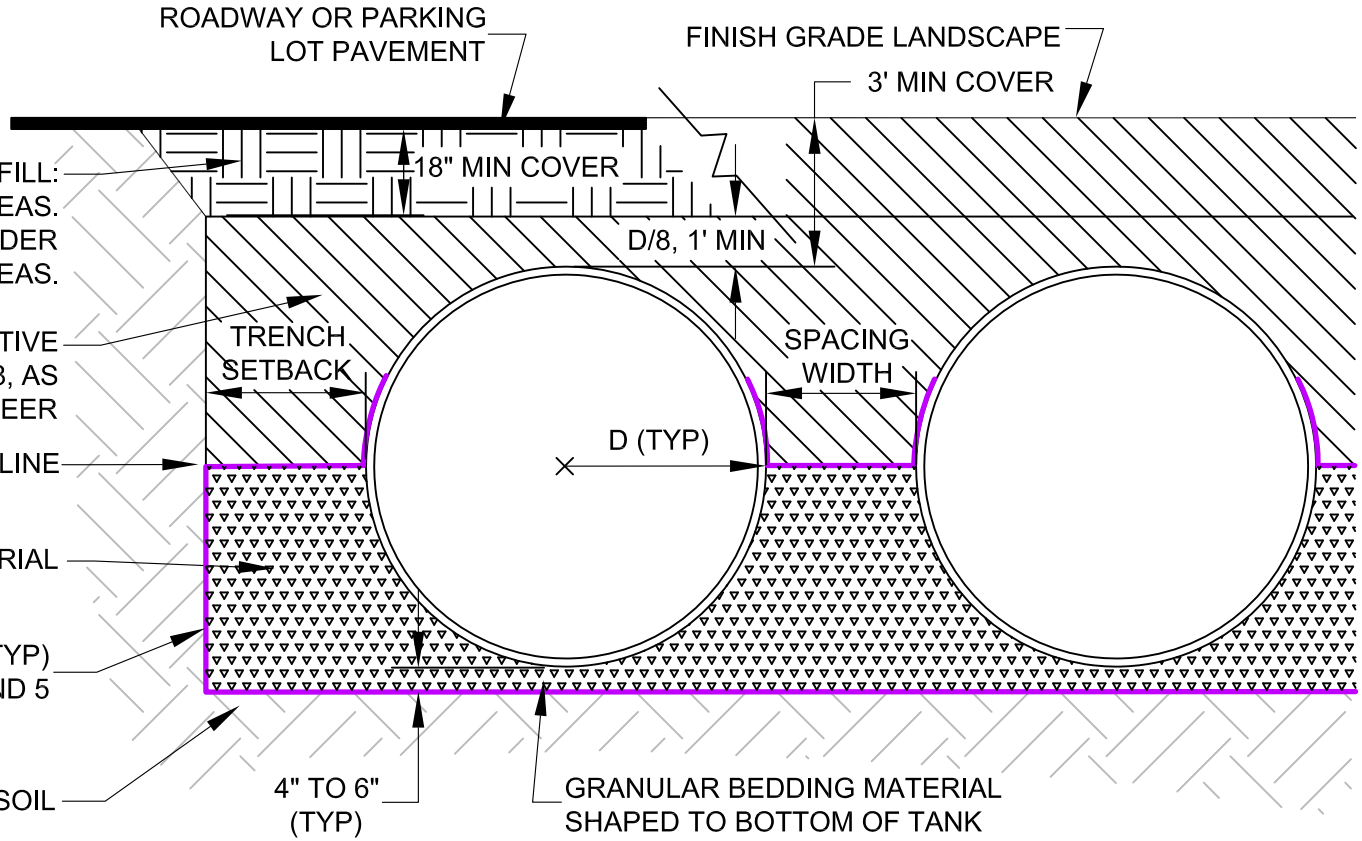

NOTES:

1. TRENCH EXCAVATION, BACKFILLING AND COMPACTION SHALL BE PER MAG SECTION 601, UNLESS OTHERWISE SPECIFIED.
2. GRANULAR MATERIAL SHALL BE 3/8" MINUS OPEN-GRADED CRUSHED ROCK DEPOSITED IN 8" LIFTS UNIFORMLY ON EACH SIDE OF THE PIPE AND COMPACTED USING VIBRATING COMPACTOR.
3. AGGREGATE BASE COURSE (ABC) MATERIAL CONFORMING TO MAG SECTION 702 MAY BE SUBSTITUTED FOR THE GRANULAR MATERIAL WITH CITY APPROVAL. IN THAT CASE, COMPACTION SHALL BE AT LEAST 95% OF AASHTO T-99 STANDARD PROCTOR DENSITY, AND THE SEPARATION FABRIC MAY BE OMITTED.
4. BACKFILL PLACEMENT AND COMPACTION SHALL BE MONITORED AND CERTIFIED BY A GEOTECHNICAL ENGINEERING FIRM RETAINED BY THE OWNER OR CONTRACTOR.
5. SEPARATION FILTER FABRIC SHALL BE NON-WOVEN, MODERATE SURVIVABILITY SUCH AS CONTECH C-45, MIRAFI 160N, US FABRICS US 160NW, CARTHAGE MILLS FX-60HS, OR APPROVED EQUAL.

DETAIL NO.					DETAIL NO.
C-509	CITY OF CHANDLER STANDARD DETAIL	**BACKFILL DETAIL CMP UNDERGROUND RETENTION STORAGE TANK**	APPROVED: CITY ENGINEER		**C-509**
NTS			DATE: 05-10-2018		NTS

SIGNAGE
C-600 TO C-623

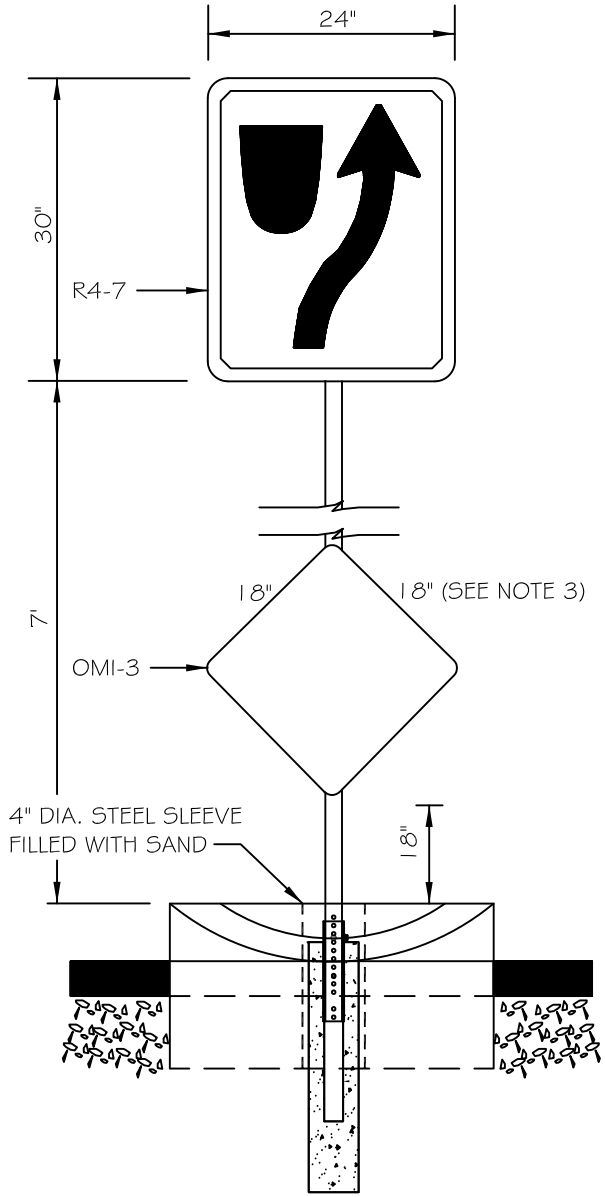

ARTERIAL INTERSECTIONS

NOTES:

1. SIGNS SHALL BE INSTALLED 6' BACK OF FACE OF BULLNOSE ON MEDIANS 4' IN WIDTH OR LESS AND 10' BACK ON MEDIAN WIDTHS GREATER THAN 4'.
2. MUTCD R4-7 AND OBJECT MARKER SIGNS SHALL BE INSTALLED AT ALL ARTERIAL / ARTERIAL INTERSECTIONS.
3. FOR MEDIANS LESS THAN 3' IN WIDTH, USE 12" X 12" OBJECT MARKER.
4. USE SAME POST SECTION, SIGN MOUNTING AND ANCHOR ASSEMBLY AS SHOWN ON COC STANDARD DETAIL C-613.
5. SEE COC STANDARD DETAIL C-225 FOR BULLNOSE REQUIREMENTS.

DETAIL NO.					DETAIL NO.
C-600	CITY OF CHANDLER STANDARD DETAIL	**MEDIAN SIGNAGE**	APPROVED: CITY ENGINEER		**C-600**
NTS			DATE: 05-10-2018		NTS

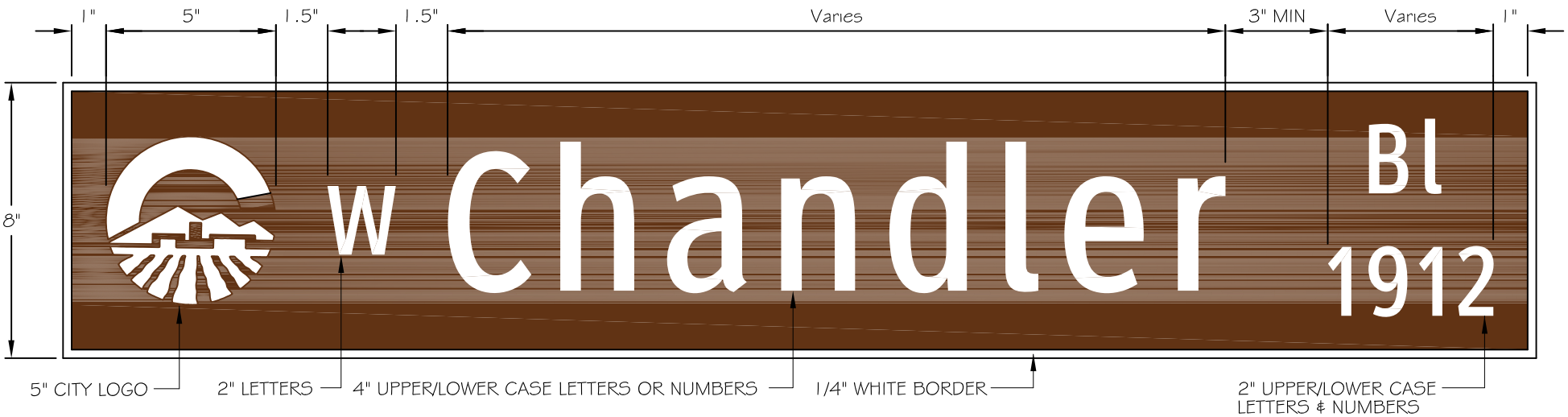

BLANKS - 8" FLAT 0.125" THICK ALUMINUM BLADES
8" x 27" to 8" x 48" AS REQUIRED.
CUT LENGTH TO FIT.

BACKGROUND - 3M WHITE HIGH INTENSITY PRISMATIC SHEETING SERIES 3930 COVERED WITH 3M BROWN ELECTRO CUT FILM SERIES 1179C

4" LETTERS - ClearviewHwy® 2-W Font*
2" LETTERS - ClearviewHwy® 2-W Font*

* WHERE LENGTH EXCEEDS 48", USE 1-W FONT. WHERE LENGTH STILL EXCEEDS 48", CONTACT CITY FOR PROPER ABBREVIATIONS.

DETAIL NO.					DETAIL NO.
C-601	CITY OF CHANDLER STANDARD DETAIL	**STREET NAME SIGNS (FOR PUBLIC STREETS)**	APPROVED: CITY ENGINEER		**C-601**
PAGE 1 OF 2			DATE: 05-10-2018		PAGE 1 OF 2

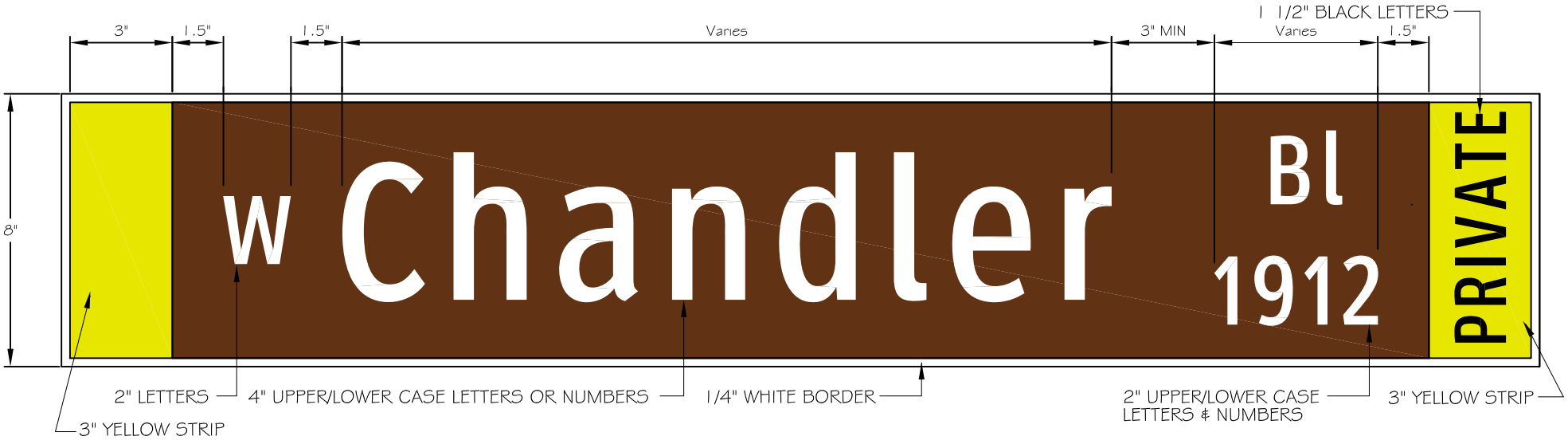

BLANKS - 8" FLAT 0.125" THICK ALUMINUM BLADES
8" x 27" to 8" x 48" AS REQUIRED.
CUT LENGTH TO FIT.

BACKGROUND - 3M WHITE HIGH INTENSITY PRISMATIC SHEETING SERIES 3930 COVERED WITH 3M BROWN ELECTRO CUT FILM SERIES 1179C

4" LETTERS - ClearviewHwy® 2-W Font*
2" LETTERS - ClearviewHwy® 2-W Font*
1 1/2" LETTERS - ClearviewHwy® 2-W Font

* WHERE LENGTH EXCEEDS 48", USE 1-W FONT. WHERE LENGTH STILL EXCEEDS 48", CONTACT CITY FOR PROPER ABBREVIATIONS.

DETAIL NO.					DETAIL NO.
C-601	CITY OF CHANDLER STANDARD DETAIL	**STREET NAME SIGNS (FOR PRIVATE STREETS)**	APPROVED: CITY ENGINEER		**C-601**
PAGE 2 OF 2			DATE: 05-10-2018		PAGE 2 OF 2

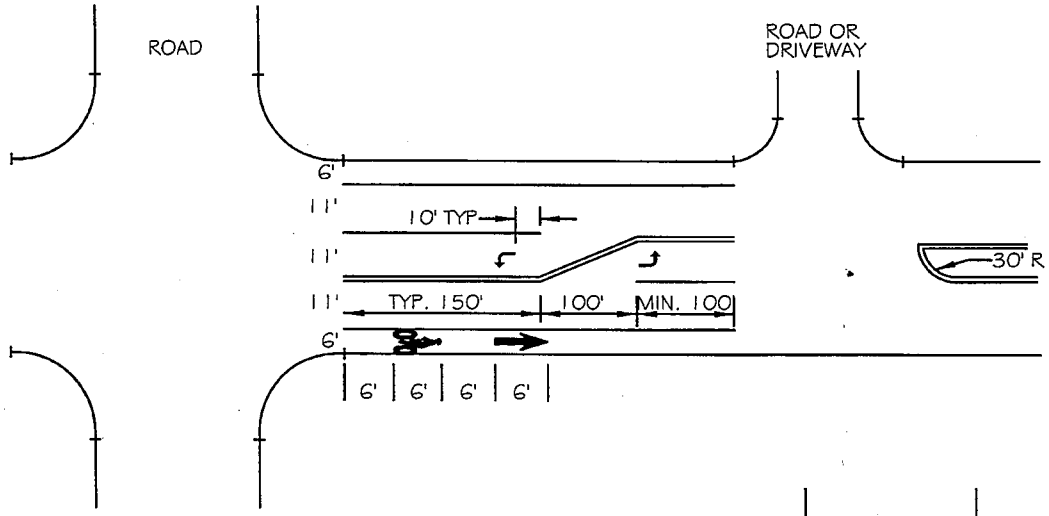

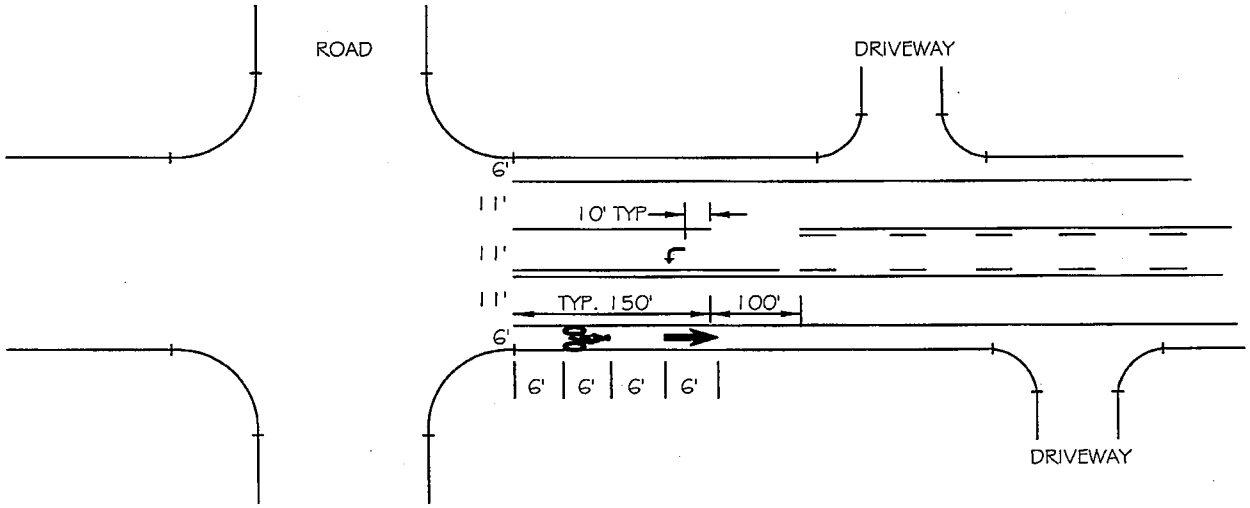

NOTES:

1. ALL DIMENSIONS TO BACK OF CURB.
2. DO NOT INSTALL REFLECTORS ON COLLECTOR ROADS.
3. INSTALL BIKE SYMBOL AND ARROW DOWNSTREAM FROM ALL INTERSECTIONS.
4. BREAK TWO-WAY LEFT TURN PAVEMENT MARKINGS FOR INTERSECTIONS. DO NOT BREAK FOR DRIVEWAYS.

DETAIL NO.				DETAIL NO.
C-602 NTS	CITY OF CHANDLER STANDARD DETAIL	**COLLECTOR ROAD PAVEMENT MARKINGS**	APPROVED: Elizabeth M. [signature] CITY ENGINEER DATE: January 21, 2002	**C-602** NTS

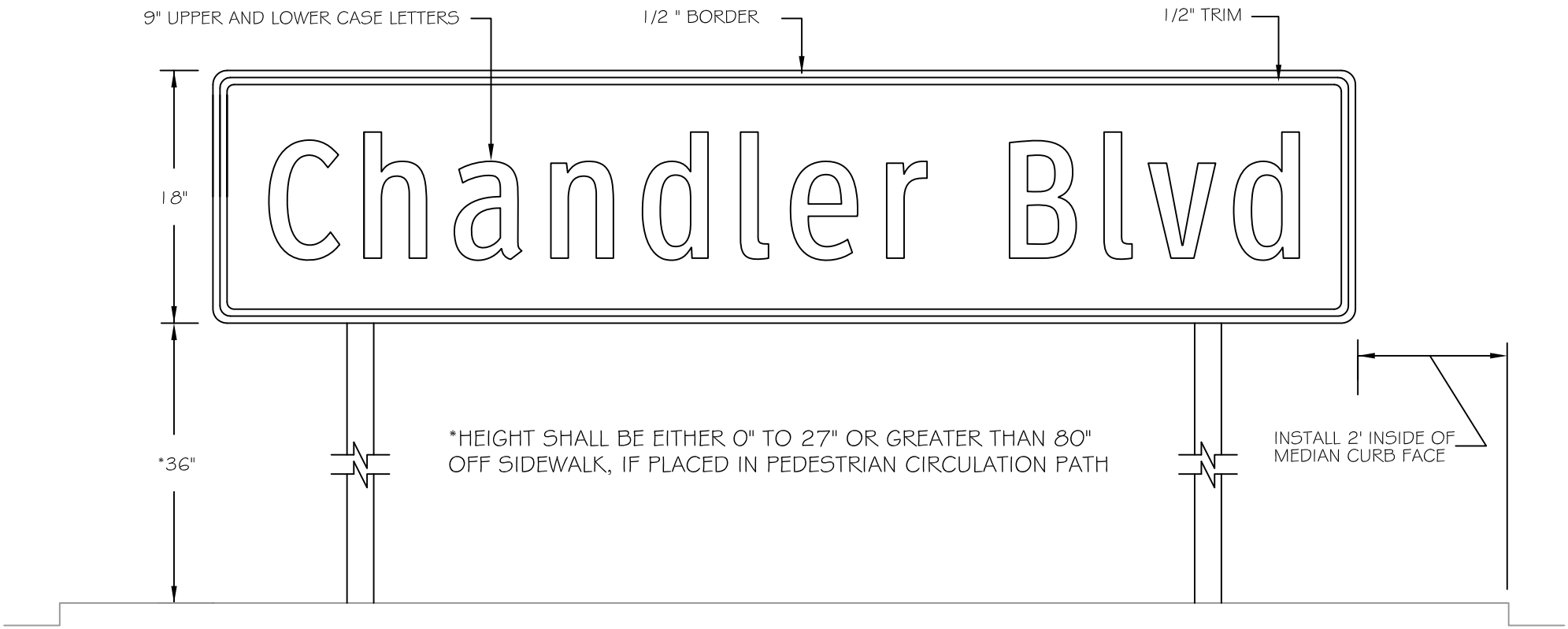

BLANKS - 18" ALUMINUM BLADES
18" x 48" to 18" x 120" AS REQUIRED

9" LETTERS/NUMBERS - ClearviewHwy® 2-W Font

BACKGROUND - 3M WHITE HIGH INTENSITY PRISMATIC SHEETING SERIES 3930 COVERED WITH 3M BROWN ELECTRO CUT FILM SERIES 1179C

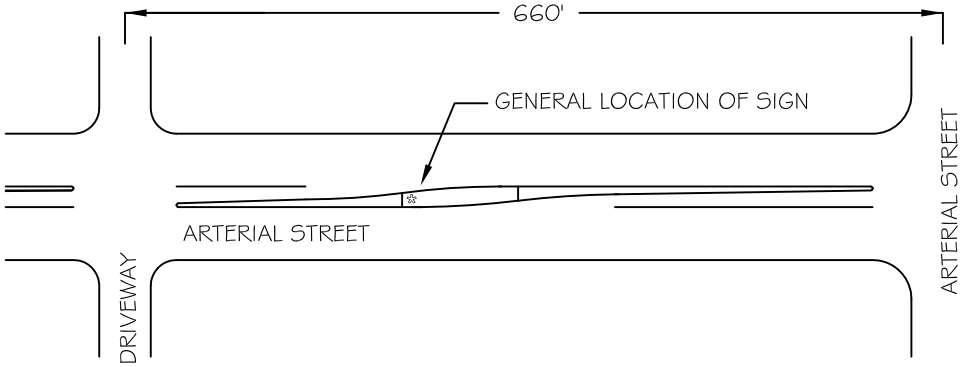

DETAIL NO.					DETAIL NO.
C-603	CITY OF CHANDLER STANDARD DETAIL	**ADVANCED STREET NAME SIGNS**	APPROVED: CITY ENGINEER		**C-603**
NTS			DATE: 05-10-2018		NTS

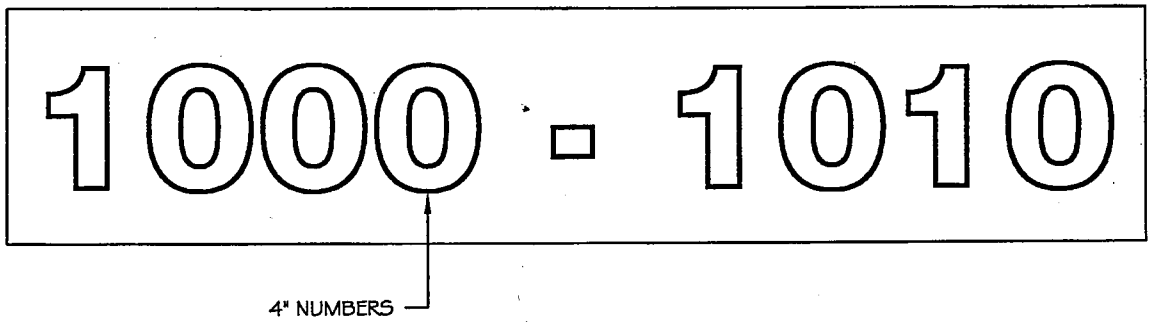

BLANKS - EXTRUDED ALUMINUM BLADES
MIN. 6" x 18" MAX. 6" x 48" AS REQUIRED
HS-1 OR VSS-1 EXTRUSION

BACKGROUND - 3M BROWN REFLECTIVE SHEETING,
HIGH INTENSITY GRADE, CODE NO. 2279 S/L

4" NUMBERS - 3M (PARKWAY WHITE) SERIES 'C'
HIGH INTENSITY GRADE

C-604 **REPLACES** **113B**	CITY OF CHANDLER STANDARD DETAIL	**ADDRESS IDENTIFICATION FOR CLUSTER DEVELOPMENTS**	APPROVED: Roger D. Patterson CITY ENGINEER DATE: 11-19-99	DETAIL NO. **C-604** NTS

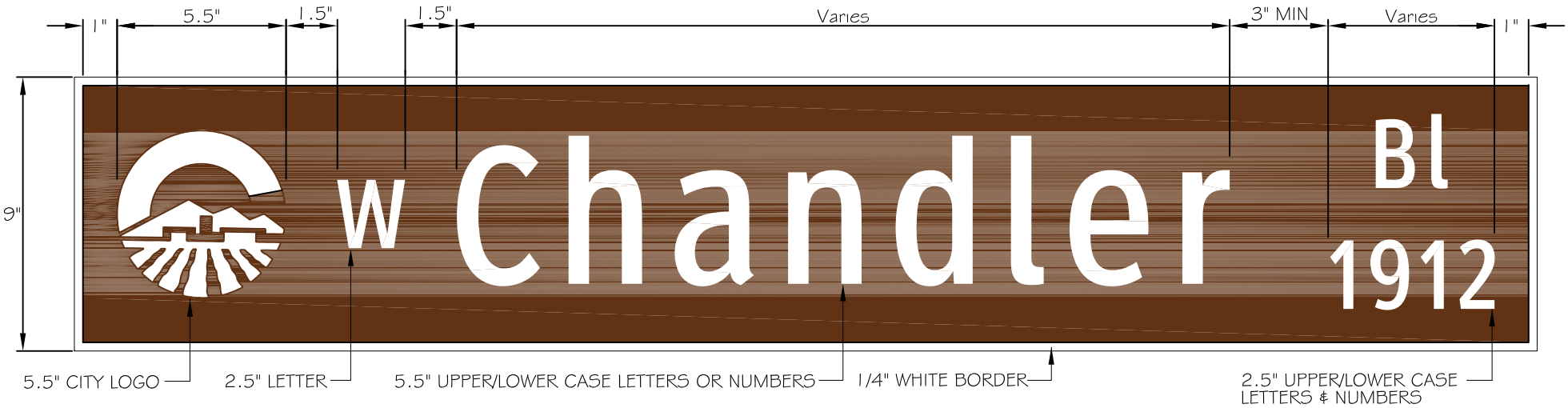

BLANKS - 9" ALUMINUM BLADES
9" x 36" to 9" x 78" AS REQUIRED

BACKGROUND - 3M WHITE HIGH INTENSITY PRISMATIC SHEETING SERIES 3930 COVERED WITH 3M BROWN ELECTRO CUT FILM SERIES 1179C

5 1/2" LETTERS - ClearviewHwy® 2-W Font
2 1/2" LETTERS - ClearviewHwy® 2-W Font

CITY LOGO - 5.5" WHITE, PRESSURE SENSITIVE, 3M HIGH INTENSITY PRISMATIC SHEETING SERIES 3930

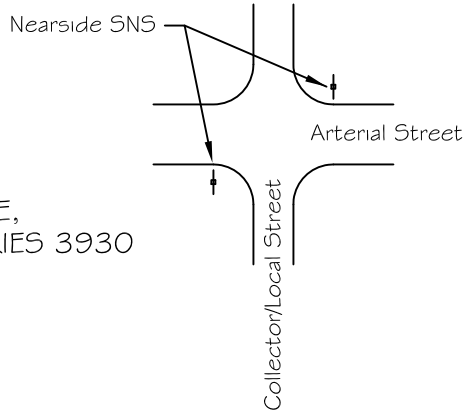

DETAIL NO. C-605 PAGE 1 OF 2	CITY OF CHANDLER STANDARD DETAIL	**NEARSIDE STREET NAME SIGNS (FOR PUBLIC STREETS)**	APPROVED: CITY ENGINEER DATE: 05-10-2018	DETAIL NO. C-605 PAGE 1 OF 2

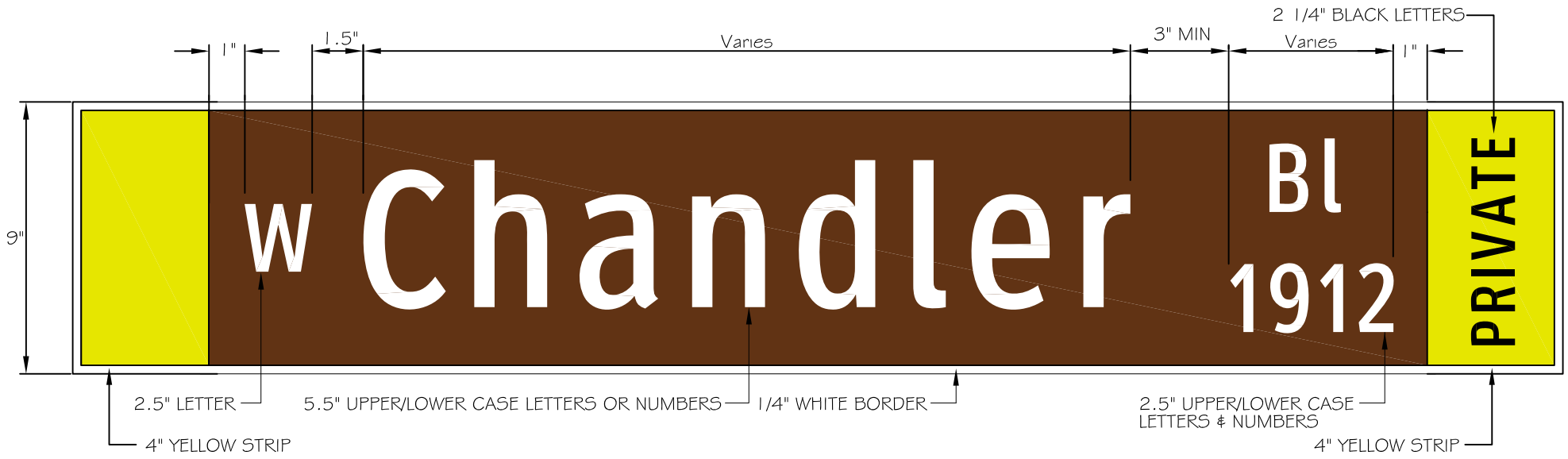

BLANKS - 9" ALUMINUM BLADES
9" x 36" to 9" x 78" AS REQUIRED

BACKGROUND - 3M WHITE HIGH INTENSITY PRISMATIC SHEETING SERIES 3930 COVERED WITH 3M BROWN ELECTRO CUT FILM SERIES 1179C

5 1/2" LETTERS - ClearviewHwy® 2-W Font
2 1/2" LETTERS - ClearviewHwy® 2-W Font
2 1/4" LETTERS - ClearviewHwy® 2-W Font

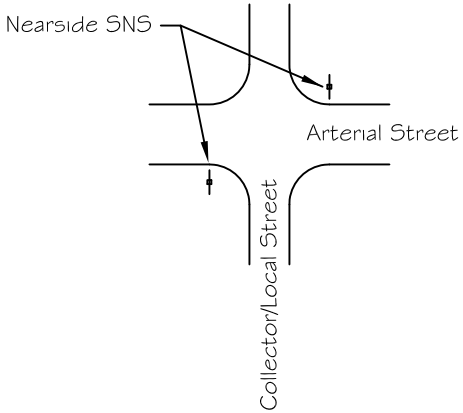

DETAIL NO. C-605 PAGE 2 OF 2	CITY OF CHANDLER STANDARD DETAIL	NEARSIDE STREET NAME SIGNS (FOR PRIVATE STREETS)	APPROVED: CITY ENGINEER DATE: 05-10-2018	DETAIL NO. C-605 PAGE 2 OF 2

OPPOSITE FACE

MOUNTING BRACKET IS ON THIS SIDE OF SIGN CABINET

F96T12CW/HO LAMPS
51-792R SIGN BALLAST
BI-PIN LAMP SOCKETS OPERATED BY PHOTOCELL ON POWER METER PEDESTAL;
SAME CIRCUIT AS STREETLIGHTS ON SIGNAL POLES

1/2 SPACE SEPARATION BETWEEN NUMBER AND LETTER (TYP)

6" ARROWS (TYP) ALL SIGNS (TIP TO TIP)

8'-1/8"

4" | 10-1/2" DIA | 2"

1-1/2" SPACE

5-1/2" TO CENTER OF ARROW

4-1/2" | 10-1/2" DIA | 1-1/2" | 9" | 4-1/2" = 30"

6-1/2"
4"

STANDARD SPACING FOR ADDRESS NUMERALS

4-1/2"
4-1/2"

MOUNTING BRACKET IS ON THIS SIDE OF SIGN CABINET

EQUAL | EQUAL

1-1/2" RETAINERS (TYP.)

TO BE CENTERED WITHIN THIS AREA EXCEPT WHEN THE AMOUNT OF CHARACTERS EXCEEDS THE ALLOWABLE SPACE. SPACING HAS BEEN INCREASED BY 70% WHEN ALLOWABLE.

CABINET: EXTRUDED ALUMINUM 12" DEEP PRIMED AND PAINTED M.A.P. #41-342 BRUSHED ALUMINUM, SATIN FINISH. INCLUDE HINGED FACE WITH PROP ROD FOR SERVICE. RETAINERS PRIMED AND PAINTED SIMILARLY.

FACES: 3/16" THICK FLAT WHITE POLYCARBONATE SHEET WITH 1ST SURFACE APPLIED VINYL AS FOLLOWS:
ENTIRE BACKGROUND: #230-59 DARK BROWN
SKY SEMI-CIRCLE SHAPE: #230-35 DARK BLUE
MOUNTAINS: #230-61 SLATE GREY
FURROWS: #230-49 BURGUNDY
ALL TEXT AND CIRCULAR BACKGROUND FOR THE LOGO ARE WHITE POLYCARBONATE FACES SHOWING THROUGH.

TYPESTYLE: HELVETICA FONT & LOWERCASE STD. SPACING FOR THE ADDRESS NUMERALS AND OPENED-UP SPACING FOR THE ST. NAMES IF ALLOWABLE

ILLUMINATION: FLUORESCENT INTERNAL 800 M.A. AS REQUIRED.

DETAIL NO.					DETAIL NO.
C-606	CITY OF CHANDLER STANDARD DETAIL	**INTERNALLY ILLUMINATED STREET NAME SIGN**	APPROVED: CITY ENGINEER		**C-606**
NTS			DATE: 01-09-2020		NTS

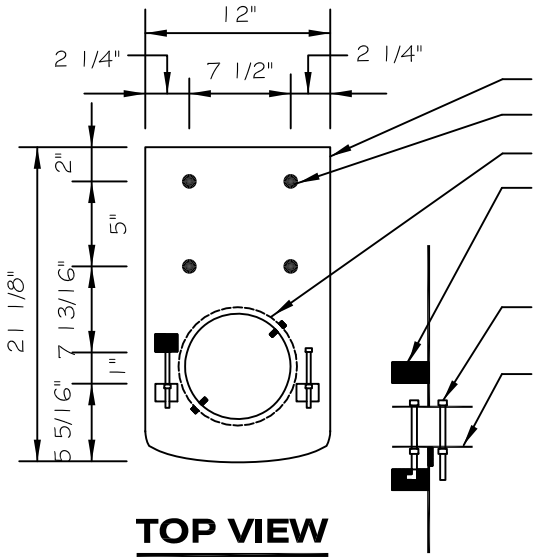

3/8" THICK STEEL PLATE, PAINTED BRUSHED ALUMINUM

3/4" DIA. X 1" SLOTTED HOLES (4 REQD.)

EXISTING SIGNAL STRUCTURE PIPE, 8 5/8" DIA.

1/4" THICK TAB, 1 1/2"X2" DRILLED AND TAPPED TO RECEIVE A 3/8" X 1-1/2" LONG BOLT. TAB TO BE WELDED TO PLATE (2 TYP)

1/2" PLATED BOLT 4" LONG WITH STEEL NUT WELDED TO FLANGE OF PLATE

ANGLE CLIPS 2"X2", 1 1/2" WIDE WELDED TO PLATE TOP AND BOTTOM

TOP VIEW

CHANDLER EXTENSION POLE

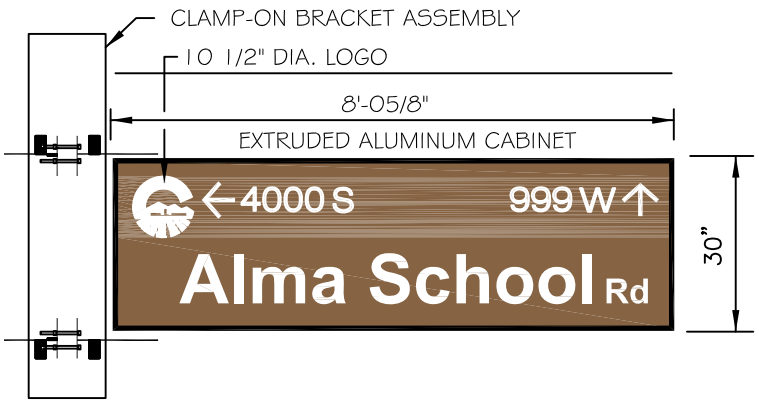

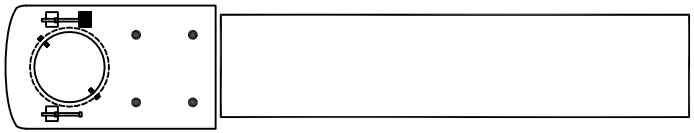

TOP VIEW

FRONT AND FACE DETAIL

DETAIL NO. **C-607** NTS	CITY OF CHANDLER STANDARD DETAIL	**INTERNALLY ILLUMINATED STREET NAME SIGN - BRACKET ASSEMBLY**	APPROVED: CITY ENGINEER DATE: 01-09-2020	DETAIL NO. **C-607** NTS

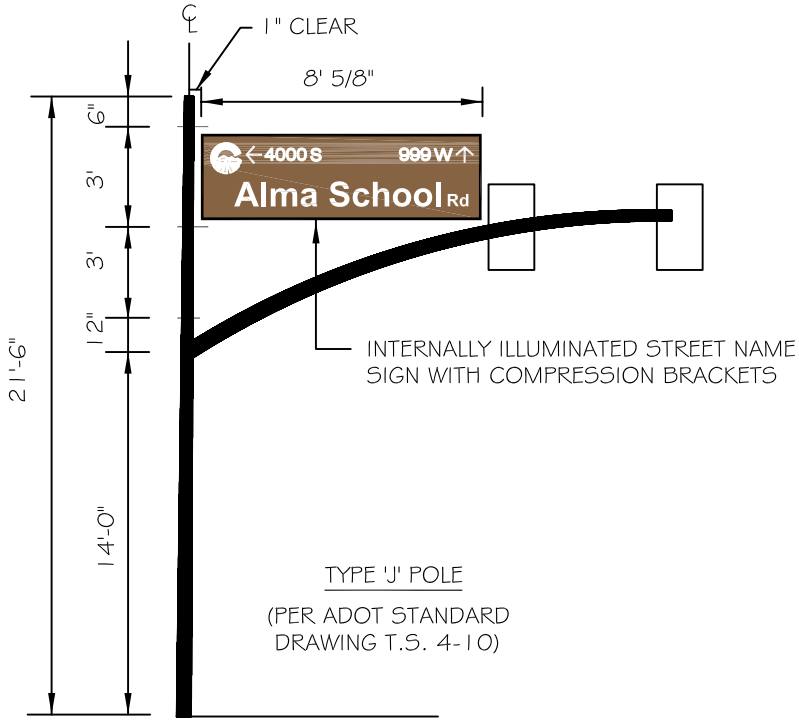

ELEVATION

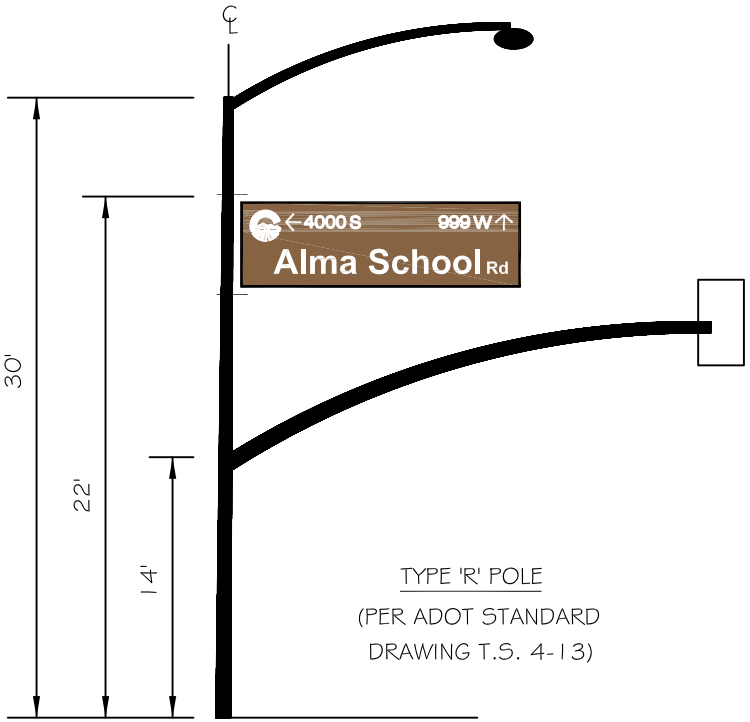

ELEVATION

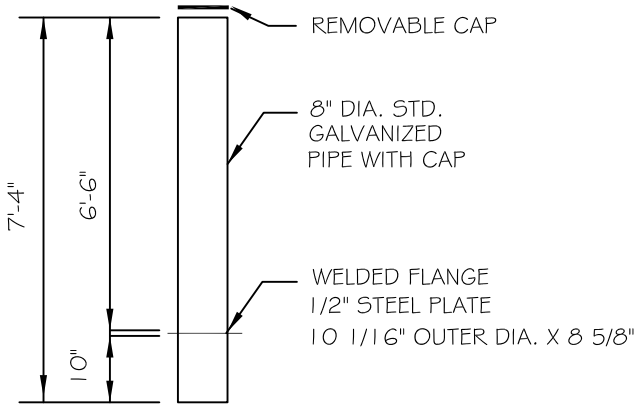

EXTENSION BRACKET DETAIL

DETAIL NO.					DETAIL NO.
C-608	CITY OF CHANDLER STANDARD DETAIL	**INTERNALLY ILLUMINATED STREET NAME SIGN - J/R POLE MOUNTING**	APPROVED: CITY ENGINEER		**C-608**
NTS			DATE: 01-09-2020		NTS

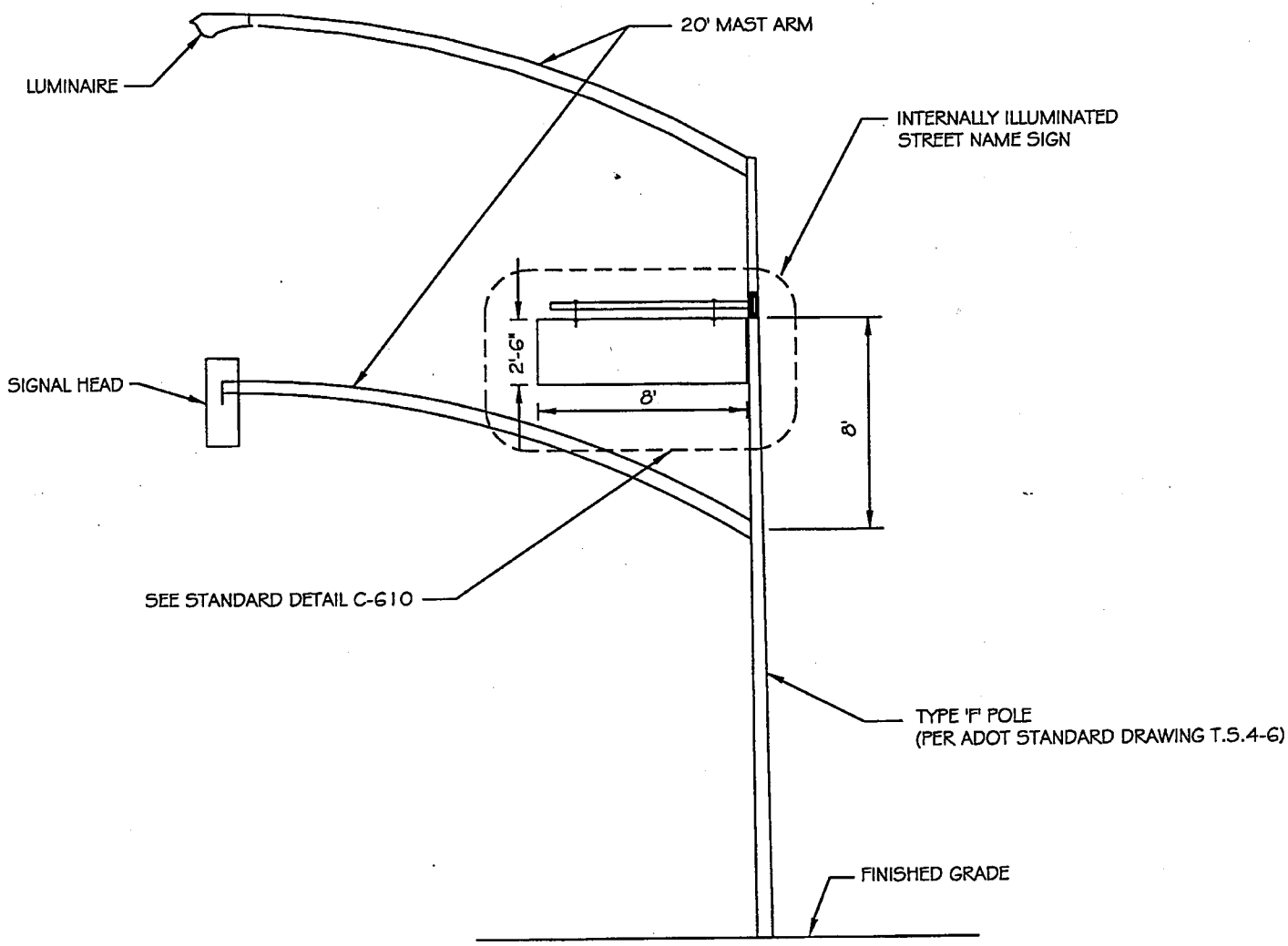

C-609 **REPLACES** **110C**	CITY OF CHANDLER STANDARD DETAIL	**INTERNALLY ILLUMINATED STREET NAME SIGN - F POLE MOUNTING**	APPROVED: Bryan D. Patterson CITY ENGINEER DATE: 11-19-99	DETAIL NO. **C-609** NTS

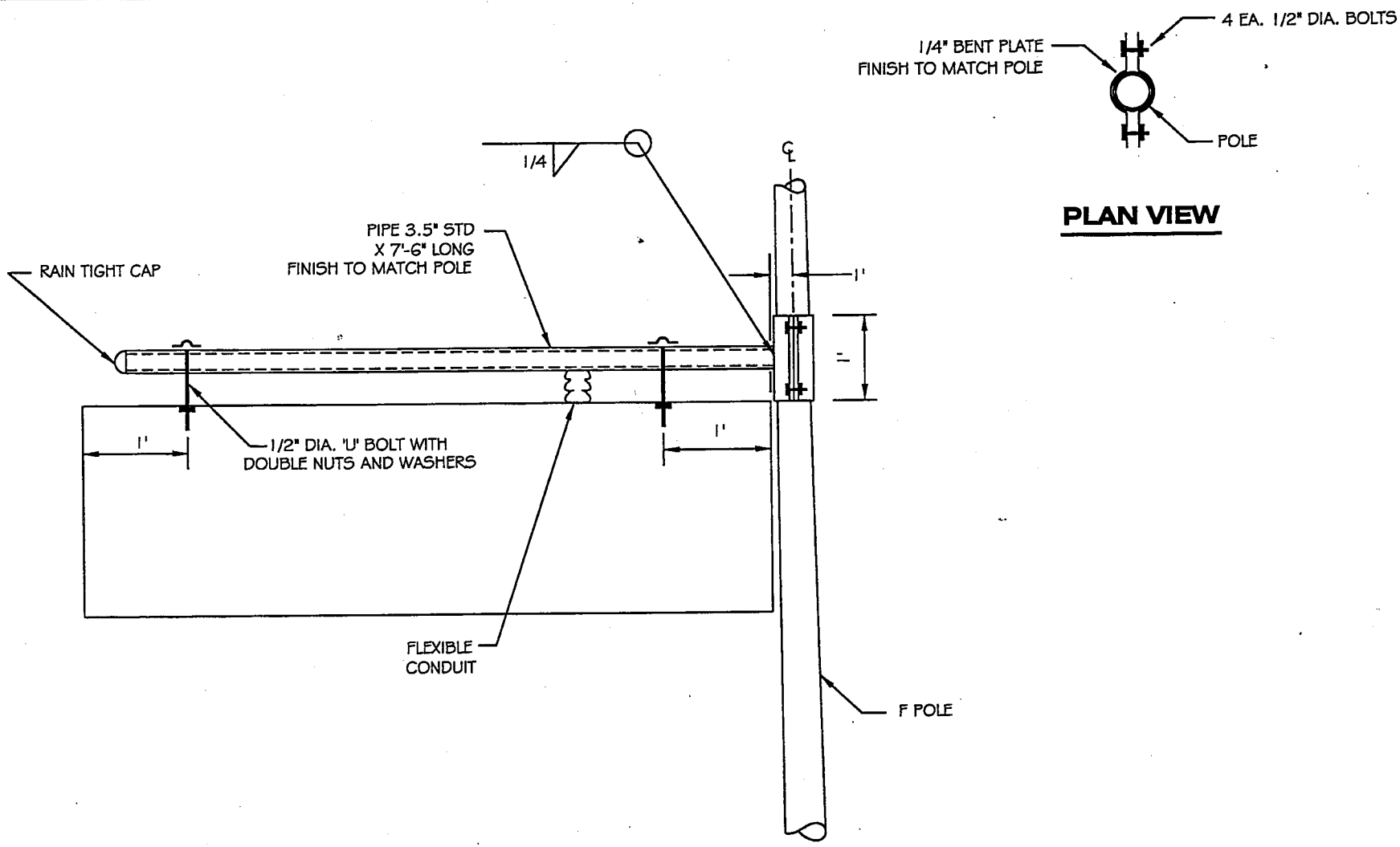

NOTE:

FINISHED SIGN SHALL BE ABLE TO SWING ABOUT MAST.

C-610 **REPLACES** **110D**	CITY OF CHANDLER STANDARD DETAIL	**INTERNALLY ILLUMINATED STREET NAME SIGN F POLE MOUNTING DETAIL**	APPROVED: Bryan D. Patterson CITY ENGINEER DATE: 11-19-99	DETAIL NO. **C-610** NTS

NOTES:

1. THE BOTTOM OF THE SIGN SHALL BE 5'-4" ABOVE FINISHED GRADE OR 7'-0" WHEN PLACED IN PEDESTRIAN CIRCULATION PATH.
2. SIGN SHALL BE CENTERED ON THE PARKING SPACE AND PLACED 2.5 FEET FROM FACE OF CURB. IN PARKING LOT SITUATIONS WITHOUT CURBING, SIGN MAY BE PLACED AT THE END OF THE STALL.
3. VAN ACCESSIBLE TAB TO BE USED, AS REQUIRED.

DETAIL NO.					DETAIL NO.
C-611	CITY OF CHANDLER STANDARD DETAIL	**ACCESSIBLE PARKING SIGN**	APPROVED: CITY ENGINEER		**C-611**
NTS			DATE: 05-10-2018		NTS

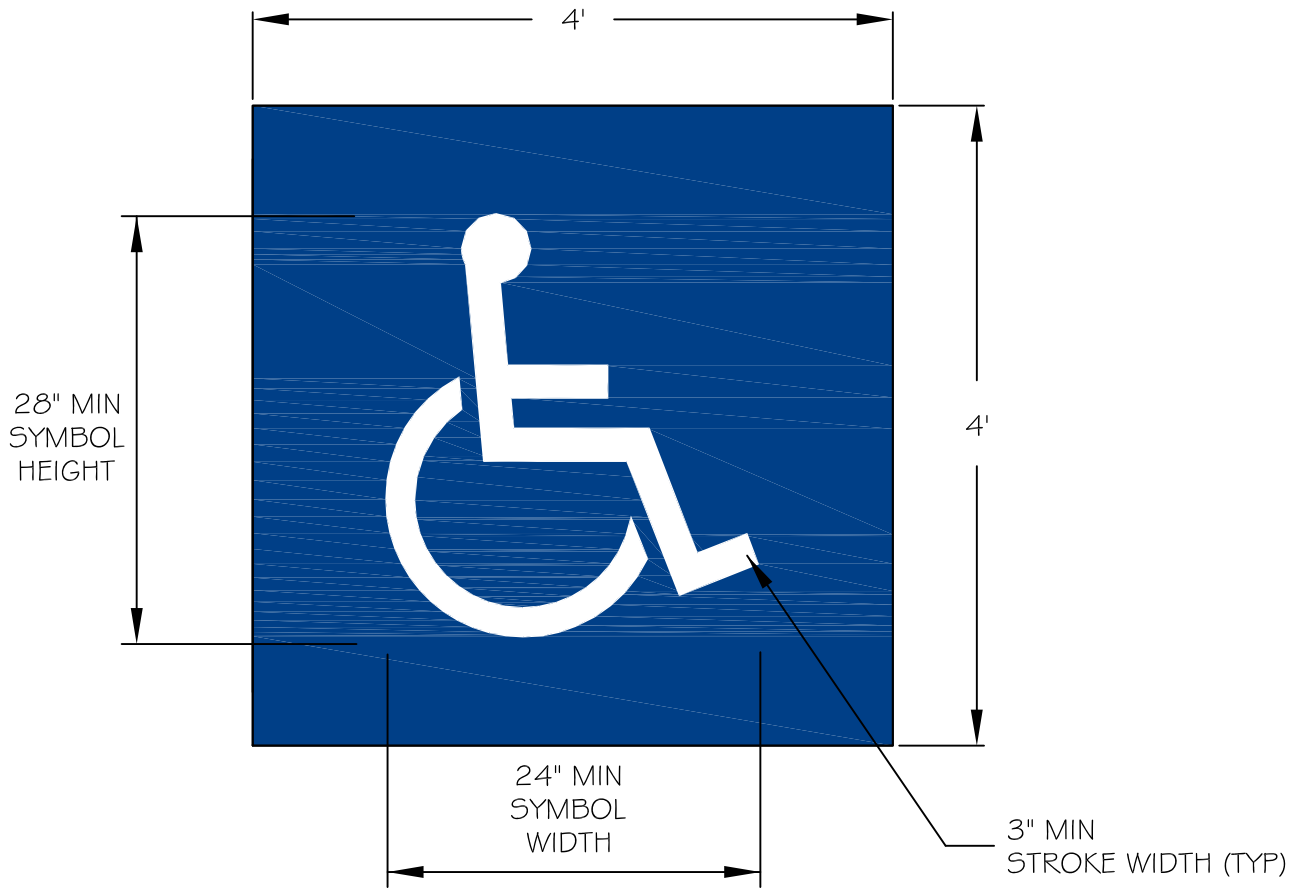

NOTES:

1. THERMOPLASTIC PAVEMENT MARKINGS SHALL BE WHITE SYMBOL ON 4' X 4' BLUE SQUARE.

2. SYMBOL MEASUREMENTS AND STROKE WIDTH SHALL MEET CURRENT MUTCD REQUIREMENTS.

DETAIL NO.					DETAIL NO.
C-612	CITY OF CHANDLER STANDARD DETAIL	**ACCESSIBLE PARKING PAVEMENT MARKING SYMBOL**	APPROVED: CITY ENGINEER		**C-612**
NTS			DATE: 05-10-2018		NTS

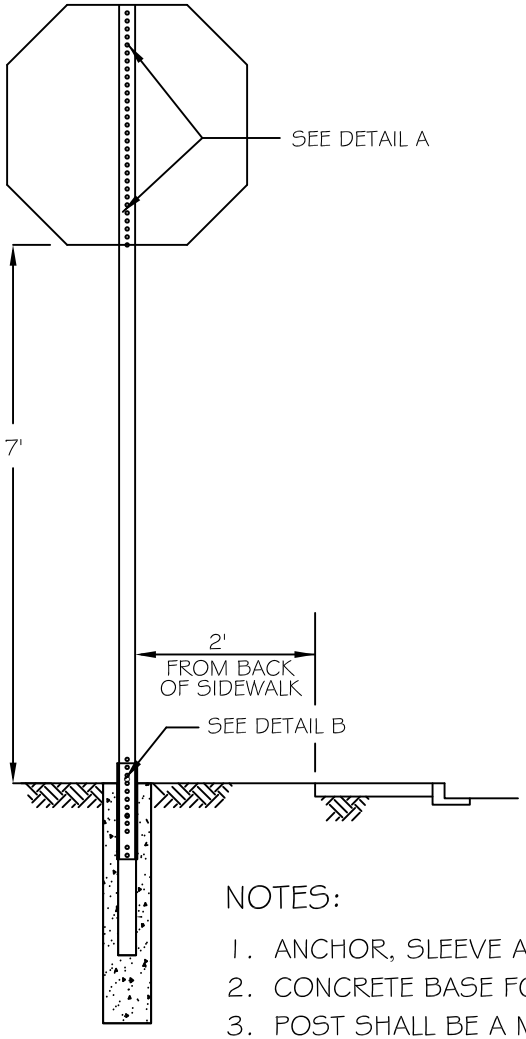

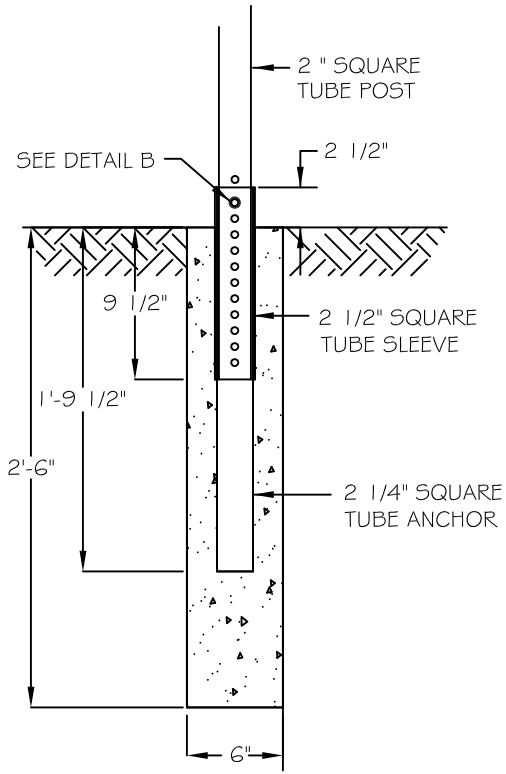

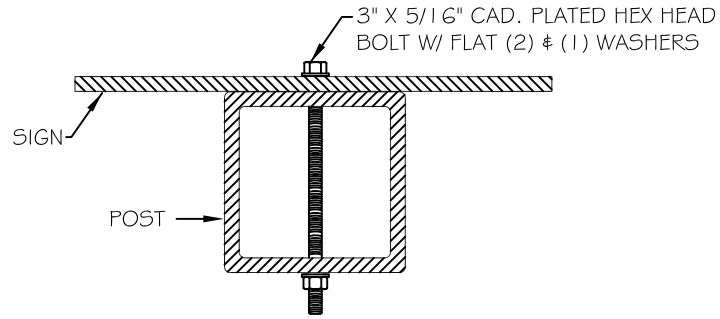

SIGN MOUNTING

DETAIL A

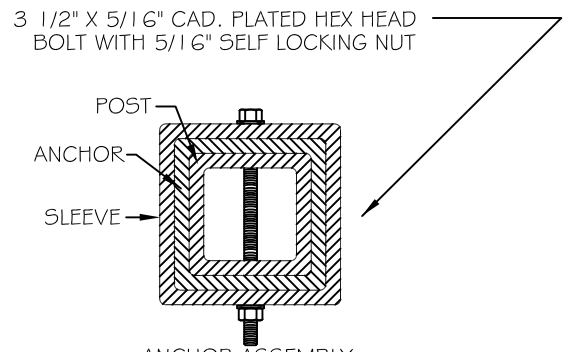

ANCHOR ASSEMBLY

DETAIL B

NOTES:

1. ANCHOR, SLEEVE AND POST ALL TO BE 12 GAUGE, .105 INCH GALVANIZED STEEL.
2. CONCRETE BASE FOUNDATION SHALL BE CLASS 'C' CONCRETE AS PER MAG STANDARD SPECIFICATIONS SEC. 505 + 725.
3. POST SHALL BE A MINIMUM LENGTH OF 11' AND SHALL BE INSERTED NOT LESS THAN 12" INTO THE ANCHOR. POST WILL NEED TO BE 12' IN LENGTH FOR ALL 'WARNING' SIGN INSTALLATIONS.
4. THE FRONT AND BACK SIDES OF POST SHALL HAVE 7/16" HOLES PUNCHED ON 1" CENTERS.
5. ANCHOR SHALL HAVE HOLES PUNCHED FOR THE TOP 3" ONLY AND BOTTOM TAPED TO PREVENT CONCRETE FROM SEEPING IN DURING INSTALLATION.

DETAIL NO.					DETAIL NO.
C-613	CITY OF CHANDLER STANDARD DETAIL	**SIGN POST AND BASE**	APPROVED: CITY ENGINEER		**C-613**
NTS			DATE: 05-10-2018		NTS

LANE LINE

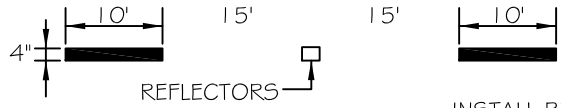

TURN LANE

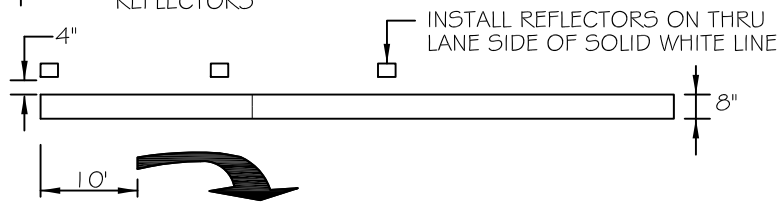

LANE DROP

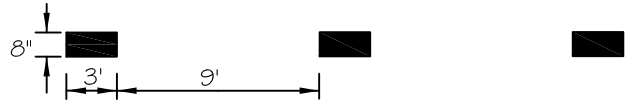

EDGE LINES

DOUBLE YELLOW

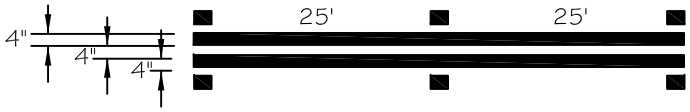

GUIDE LINES

THRU INTERSECTIONS

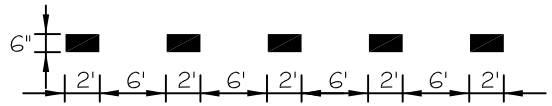

BIKE LANE

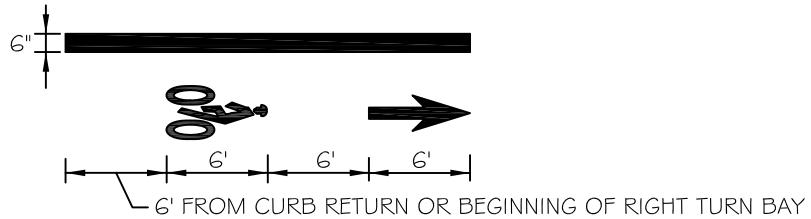

TWO-WAY LEFT TURN LANE

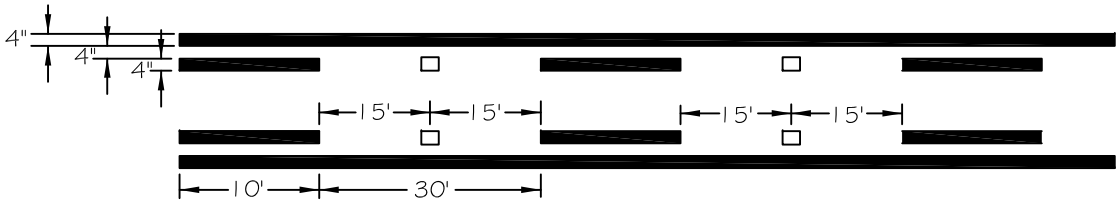

NOTE: ALL CROSS WALKS, STOP BARS, MINI-SKIPS, AND TURN LANE MARKINGS SHALL BE THERMOPLASTIC.

DETAIL NO.					DETAIL NO.
C-614	CITY OF CHANDLER STANDARD DETAIL	**PAVEMENT MARKING DETAILS**	APPROVED: CITY ENGINEER		**C-614**
NTS			DATE: 01-09-2020		NTS

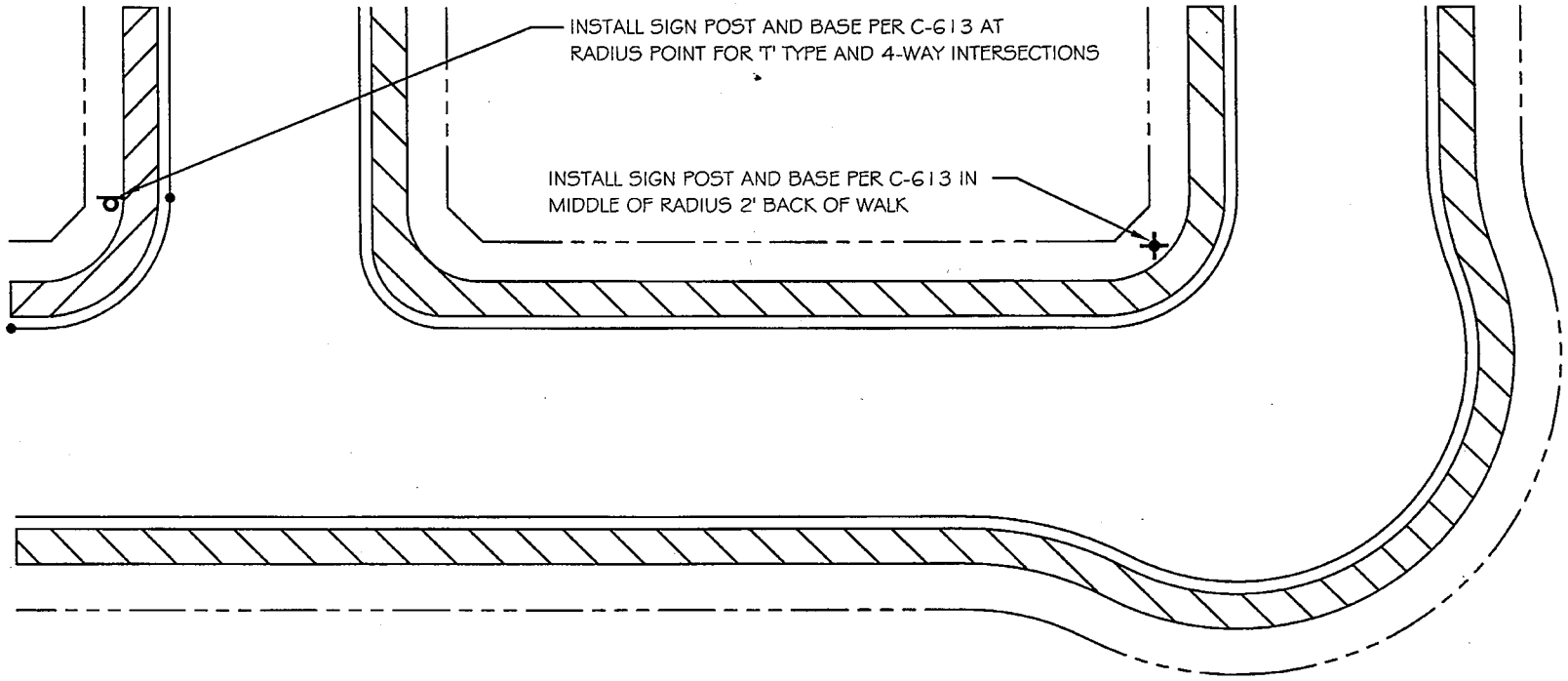

C-615		CITY OF CHANDLER STANDARD DETAIL	**SIGN POST AND BASE LOCATIONS FOR RESIDENTIAL STREETS**	APPROVED: CITY ENGINEER DATE: January 11, 2002	DETAIL NO. **C-615** NTS

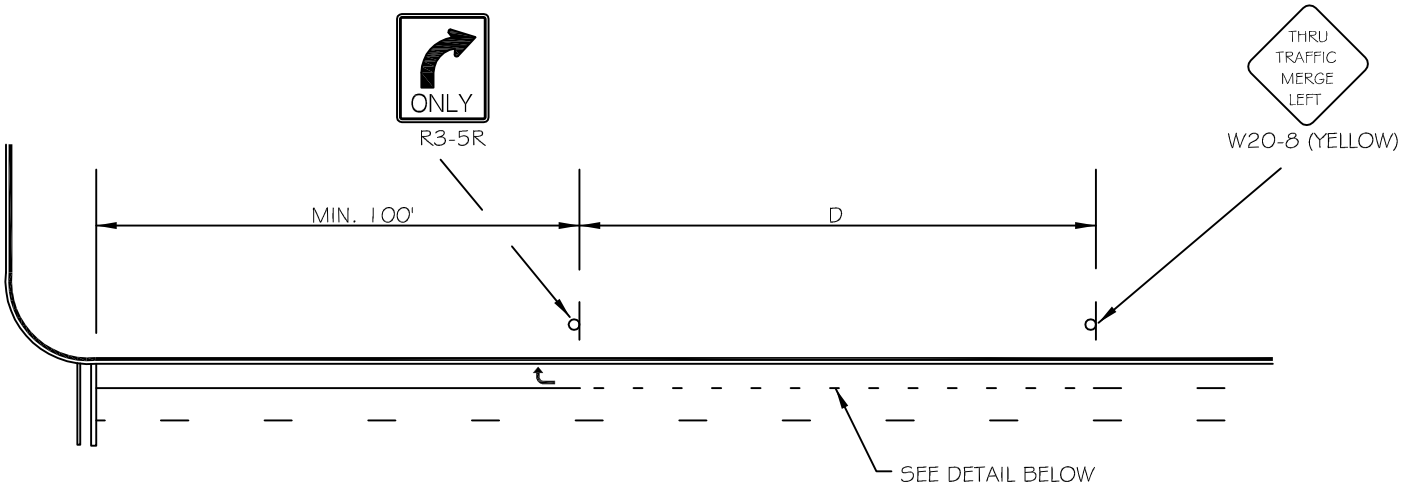

SPEED LIMIT	D* (FT)
20	175
25	250
30	325
35	400
40	475
45	550
50	625
55	700
60	775

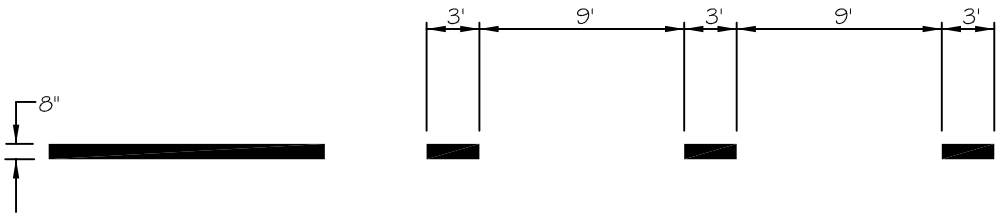

DETAIL A: FROM MUTCD FIGURE 3B-10

* FROM MUTCD TABLE 2C-4

DETAIL NO.					DETAIL NO.
C-616	CITY OF CHANDLER STANDARD DETAIL	**RIGHT TURN LANE DROP**	APPROVED: CITY ENGINEER		**C-616**
NTS			DATE: 3/14/2013		NTS

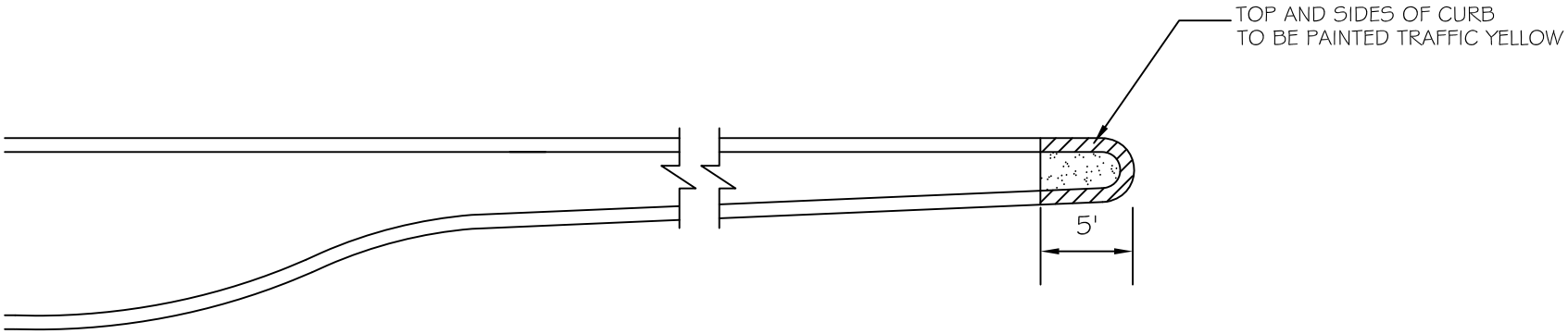

3' TYPICAL MEDIAN NOSE

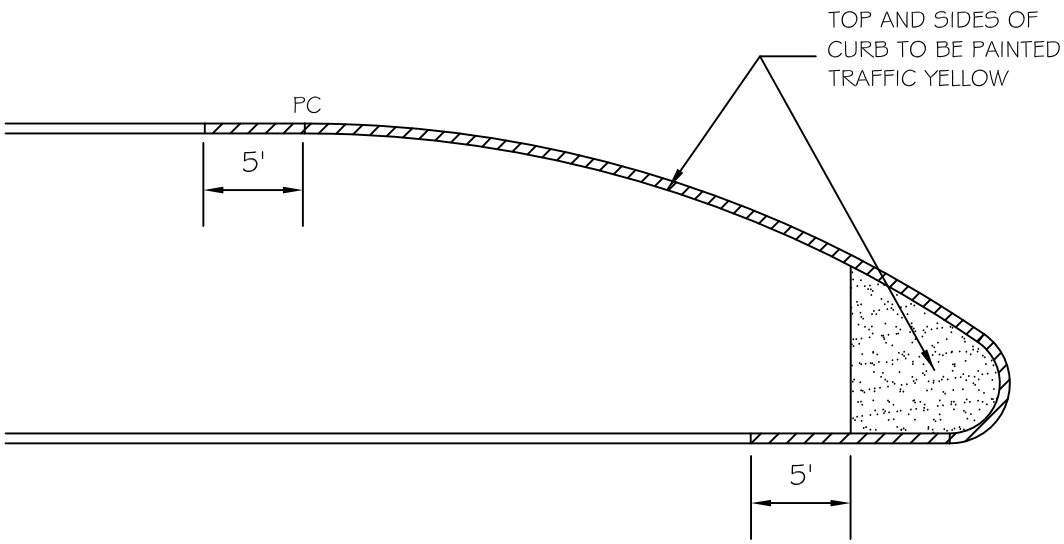

16' RAISED MEDIAN OR GREATER

DETAIL NO.					DETAIL NO.
C-617	CITY OF CHANDLER STANDARD DETAIL	**MEDIAN NOSE PAINTING**	APPROVED: CITY ENGINEER		**C-617**
NTS			DATE: 05-10-2018		NTS

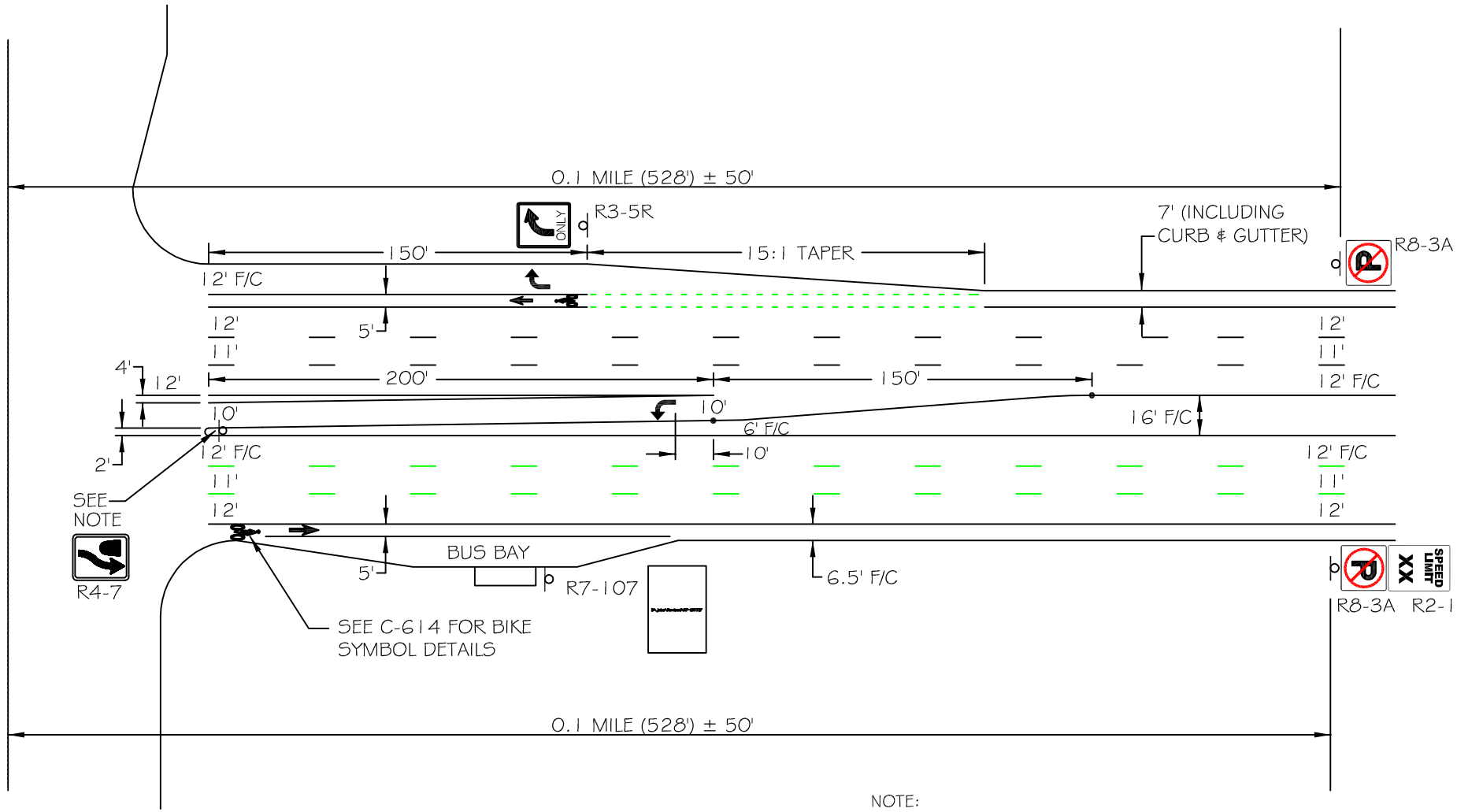

NOTE:
INSTALL KEEP RIGHT (R4-7) ONLY IF MEDIAN IS BEING INTRODUCED AT THIS POINT ALONG THE ARTERIAL ROAD OR AT SIGNALIZED INTERSECTIONS

DETAIL NO.					DETAIL NO.
C-618	CITY OF CHANDLER STANDARD DETAIL	**TYPICAL SIGNS AND MARKINGS ARTERIAL ROAD**	APPROVED: CITY ENGINEER		**C-618**
NTS			DATE: 3/14/2013		NTS

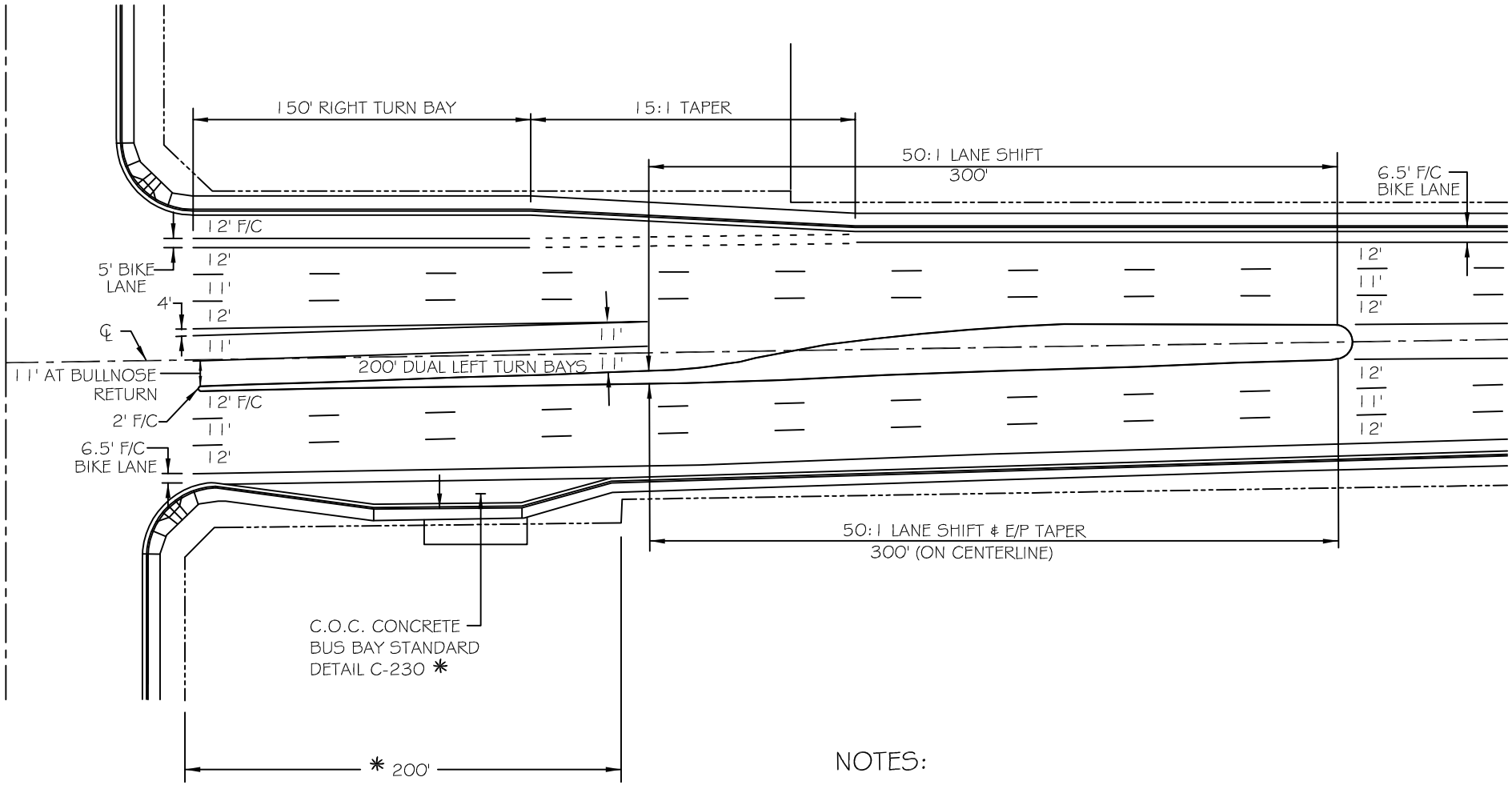

NOTES:

50 : 1 TAPERS FOR REDIRECTION OF THROUGH LANES

15 : 1 TAPERS FOR RIGHT TURN BAY APPROACHES

ALL DIMENSIONS TO CENTER OF LANE LINE UNLESS OTHERWISE NOTED

DETAIL NO.					DETAIL NO.
C-619	CITY OF CHANDLER STANDARD DETAIL	**TYPICAL LANE WIDTHS - ARTERIAL ROAD WITH DOUBLE LEFT TURNS**	APPROVED: CITY ENGINEER		**C-619**
NTS			DATE: 3/14/2013		NTS

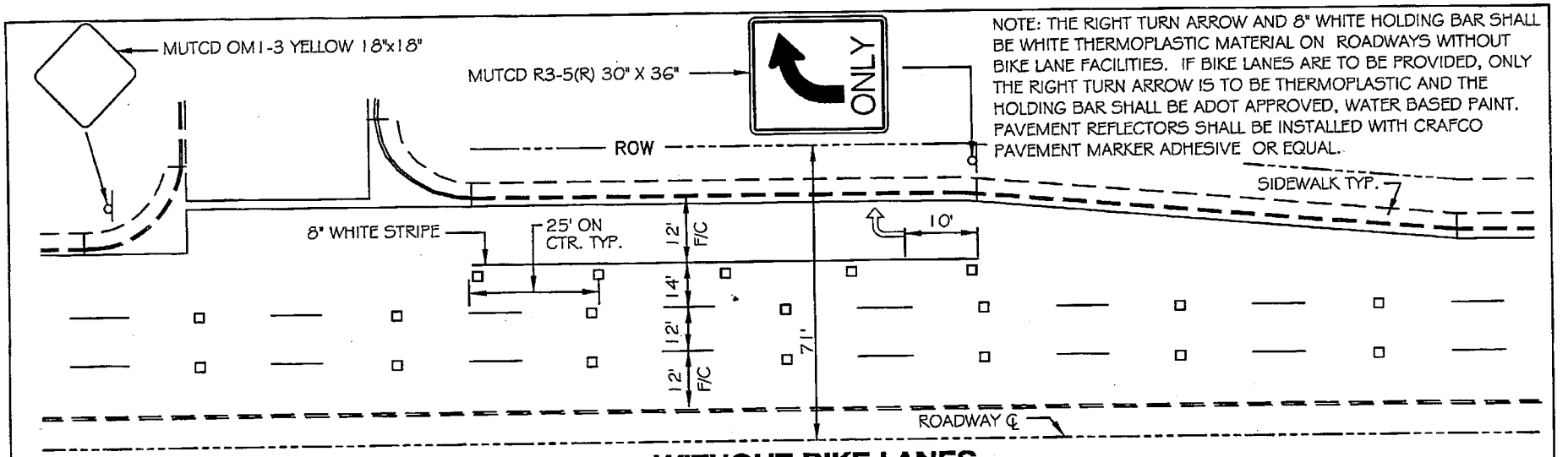

NOTE: THE RIGHT TURN ARROW AND 8" WHITE HOLDING BAR SHALL BE WHITE THERMOPLASTIC MATERIAL ON ROADWAYS WITHOUT BIKE LANE FACILITIES. IF BIKE LANES ARE TO BE PROVIDED, ONLY THE RIGHT TURN ARROW IS TO BE THERMOPLASTIC AND THE HOLDING BAR SHALL BE ADOT APPROVED, WATER BASED PAINT. PAVEMENT REFLECTORS SHALL BE INSTALLED WITH CRAFCO PAVEMENT MARKER ADHESIVE OR EQUAL.

WITHOUT BIKE LANES

(PRE 1993 ARTERIAL)

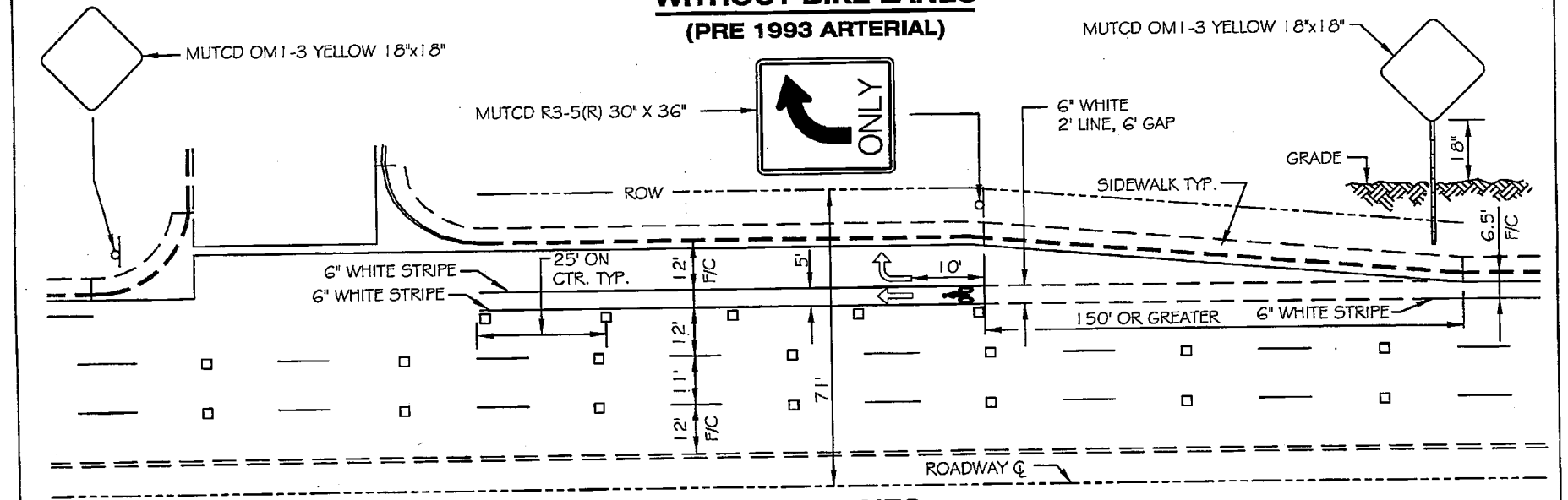

WITH BIKE LANES

DETAIL NO.					DETAIL NO.
C-620 NTS	CITY OF CHANDLER STANDARD DETAIL	**MAJOR ARTERIAL DECELERATION LANE SIGNING AND STRIPING**	APPROVED: CITY ENGINEER DATE: 01/08/09		**C-620** NTS

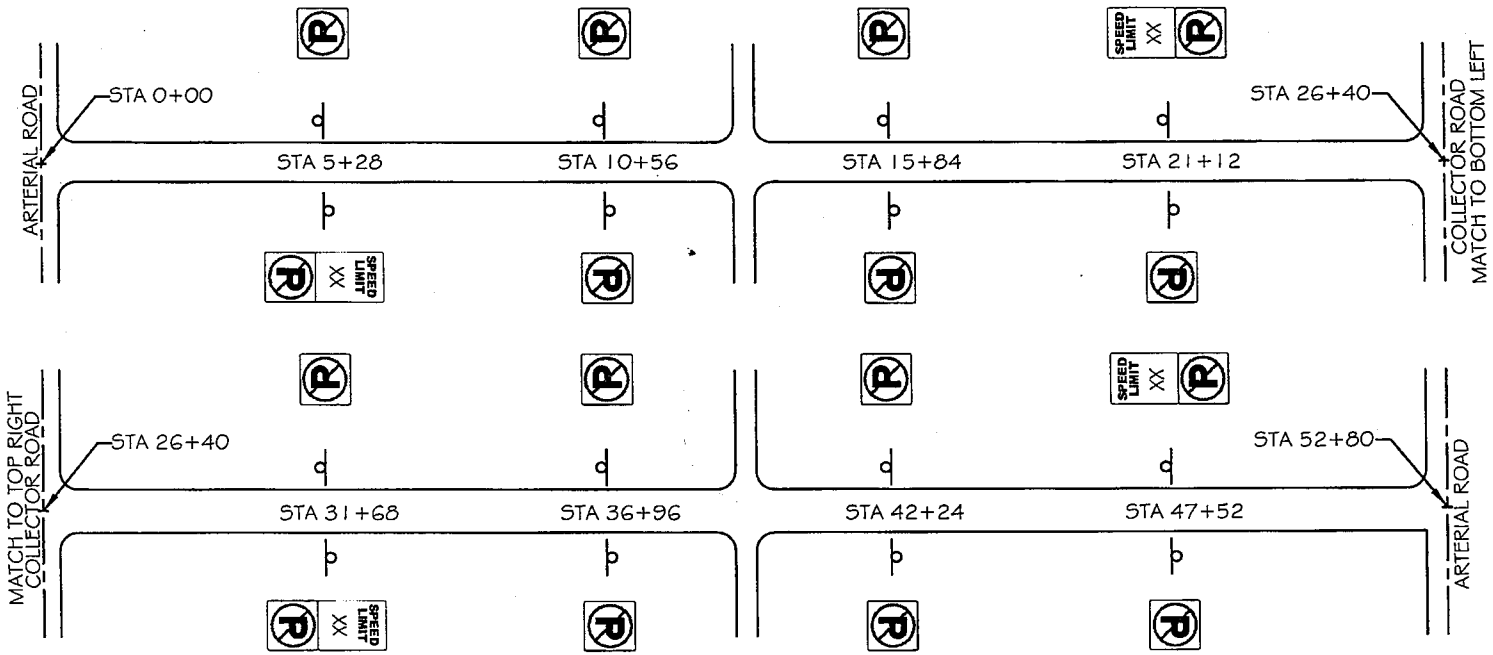

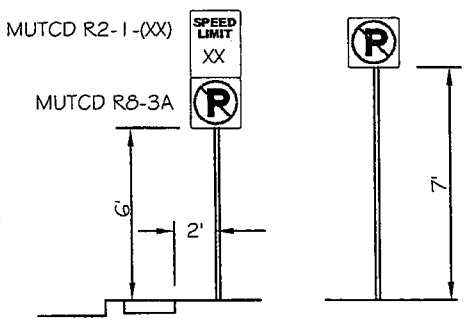

NOTE: SIGNING SHOWN ONLY REPRESENTS THE PLACEMENT OF THE NO-PARKING AND SPEED LIMIT SIGNS. ADDITIONAL SIGNING MAY BE REQUIRED DEPENDING ON EACH INDIVIDUAL SITUATION.

THE SPACING OF THE NO-PARKING SIGNS SHOULD BE 528' (1/10 MILE) APART, BUT MAY VARY UP TO 50' IF SIGN CAN BE MOUNTED ONTO A EXISTING POLE OR A STREET LIGHT POLE.

NO-PARKING SIGNS SHALL BE 24"x24" UNLESS OTHERWISE NOTED.

SPEED LIMIT SHALL BE DETERMINED BY THE CITY ENGINEER AND THE SIGN SHALL BE 24"x30" IN SIZE. THERE SHALL BE 4 SPEED LIMIT SIGNS PER MILE AS SHOWN ABOVE.

DETAIL NO.	CITY OF CHANDLER STANDARD DETAIL	ARTERIAL SIGNAGE	APPROVED: Elizabeth Burrows CITY ENGINEER DATE: January 11, 2002	DETAIL NO.
C-621 NTS				C-621 NTS

SEE PAVEMENT MARKING DETAIL C-614 FOR STRIPING WIDTHS.
SEE INTERSECTION MARKINGS DETAIL C-623 FOR NOTES
ON STRIPING MATERIAL AND REFLECTOR INSTALLATION.

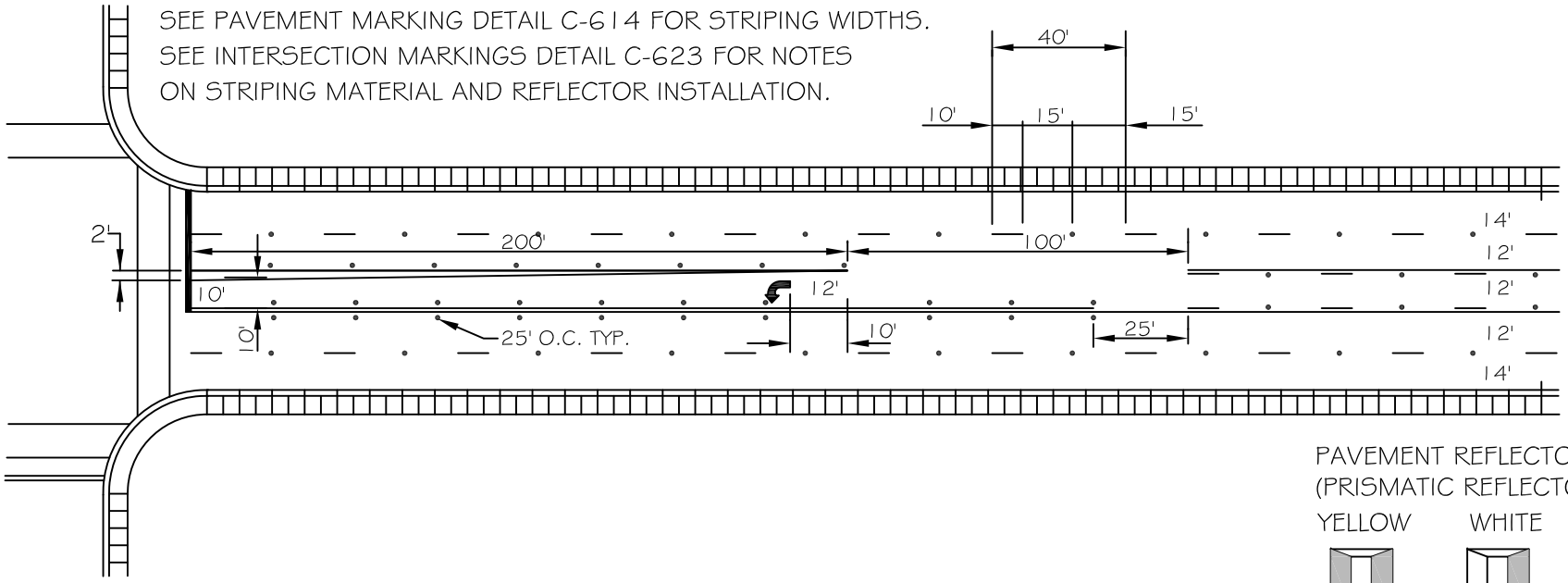

PAVEMENT REFLECTORS
(PRISMATIC REFLECTORS ONLY)

YELLOW WHITE

INSTALL WITH
CRAFCO BITUMINOUS
MATERIAL OR EQUAL

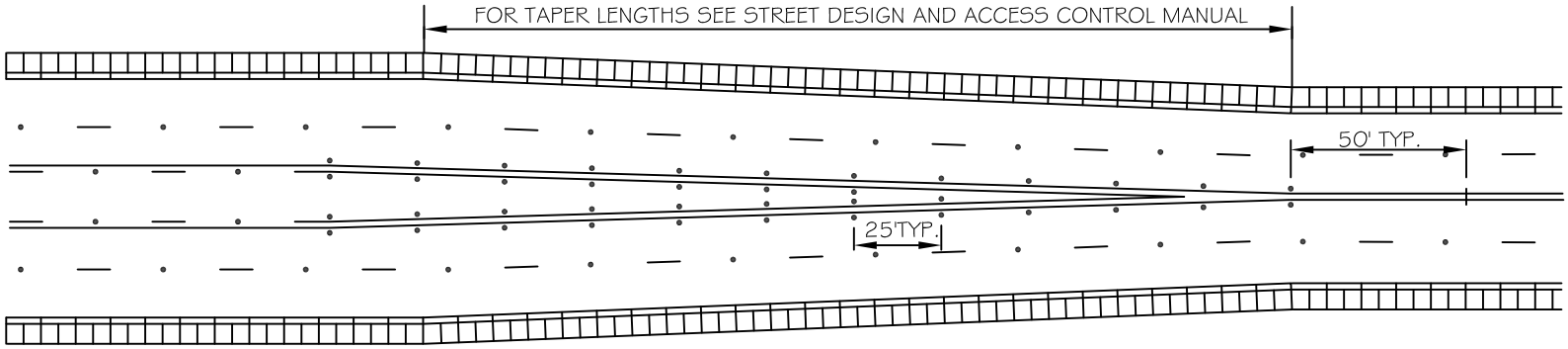

DETAIL NO.					DETAIL NO.
C-622	CITY OF CHANDLER STANDARD DETAIL	**ARTERIAL ROADWAY MARKINGS (W/O MEDIANS)**	APPROVED: CITY ENGINEER		**C-622**
NTS			DATE: 05-10-2018		NTS

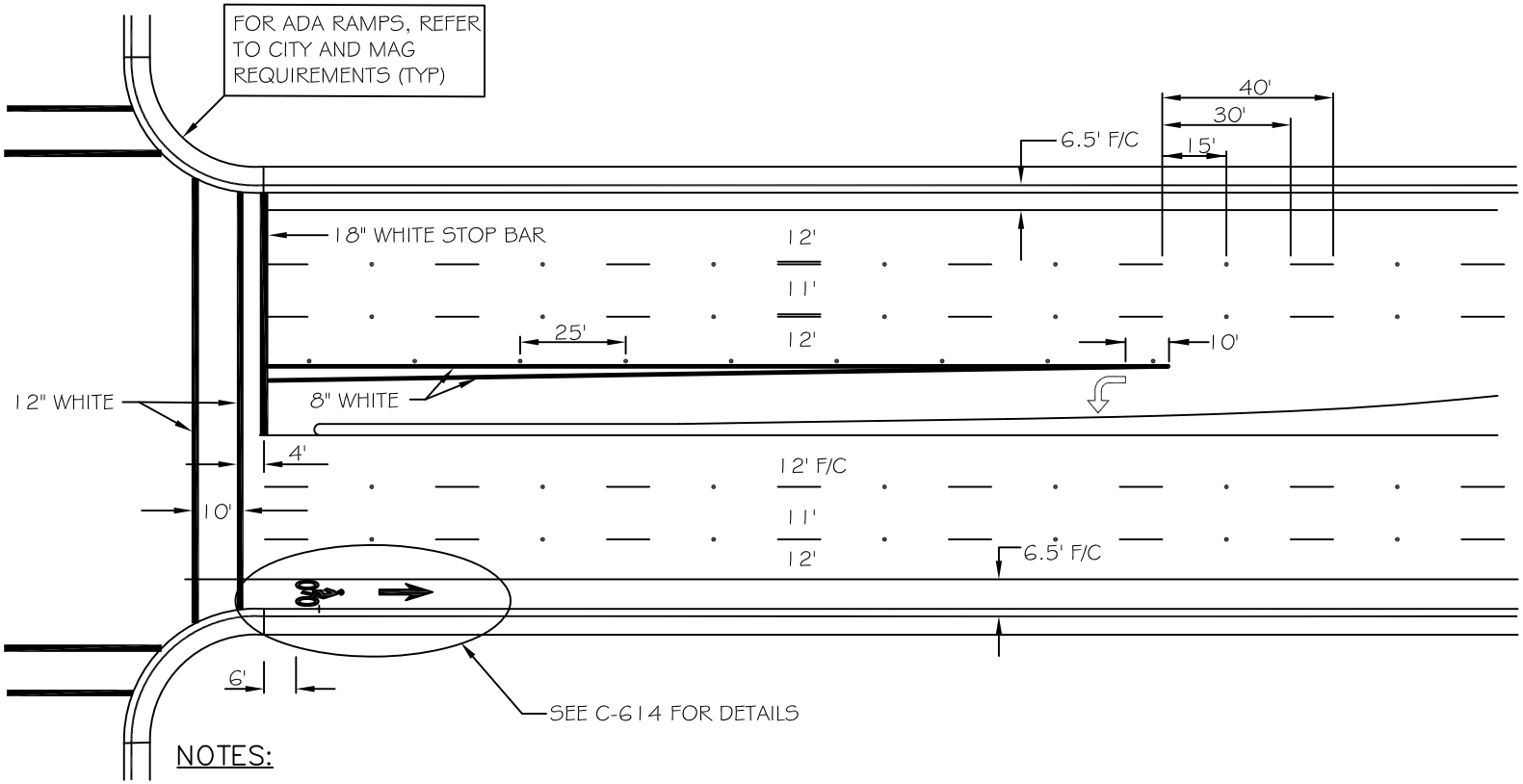

NOTES:

1. CROSSWALK AND STOP BAR STRIPING SHALL ONLY BE STRIPED AT SIGNALIZED OR MULTI-WAY STOP CONTROLLED INTERSECTIONS, UNLESS OTHERWISE NOTED BY THE TRAFFIC ENGINEERING OFFICE.

2. ROADWAYS WITHOUT BIKE LANES WILL HAVE DIFFERENT CROSS-SECTION. THE LANE WIDTHS WILL BE THE SAME WITH THE EXCEPTION OF THE OUTER LANES WHICH ARE 15' ± MEASURED FROM BACK OF CURB.

3. THERMOPLASTIC MATERIAL SHALL BE APPLIED AT A MIN. THICKNESS OF 60 MIL. WITH THE EXCEPTION OF BIKE LANES AND SYMBOLS. BIKE LANE AND SYMBOL STRIPING SHALL BE WATER BASED PAINT MEETING OR EXCEEDING ARIZONA DEPARTMENT OF TRANSPORTATION STANDARD DRAWINGS AND SPECIFICATIONS, UNLESS OTHERWISE NOTED

4. PAVEMENT REFLECTORS SHALL MEET OR EXCEED ARIZONA DEPARTMENT OF TRANSPORTATION STANDARD DRAWINGS AND SPECIFICATIONS, UNLESS OTHERWISE NOTED. PAVEMENT REFLECTORS SHALL BE INSTALLED WITH CRAFCO PAVEMENT MARKER ADHESIVE, OR EQUAL. ALL PAVEMENT REFLECTORS SHALL HAVE THE PRISMATIC REFLECTIVE SURFACE FACING ONCOMING TRAFFIC.

DETAIL NO.					DETAIL NO.
C-623	CITY OF CHANDLER STANDARD DETAIL	**INTERSECTION MARKINGS (WITH MEDIANS)**	APPROVED: CITY ENGINEER		**C-623**
NTS			DATE: 05-10-2018		NTS

LANDSCAPE SERIES

C-801 TO C-817

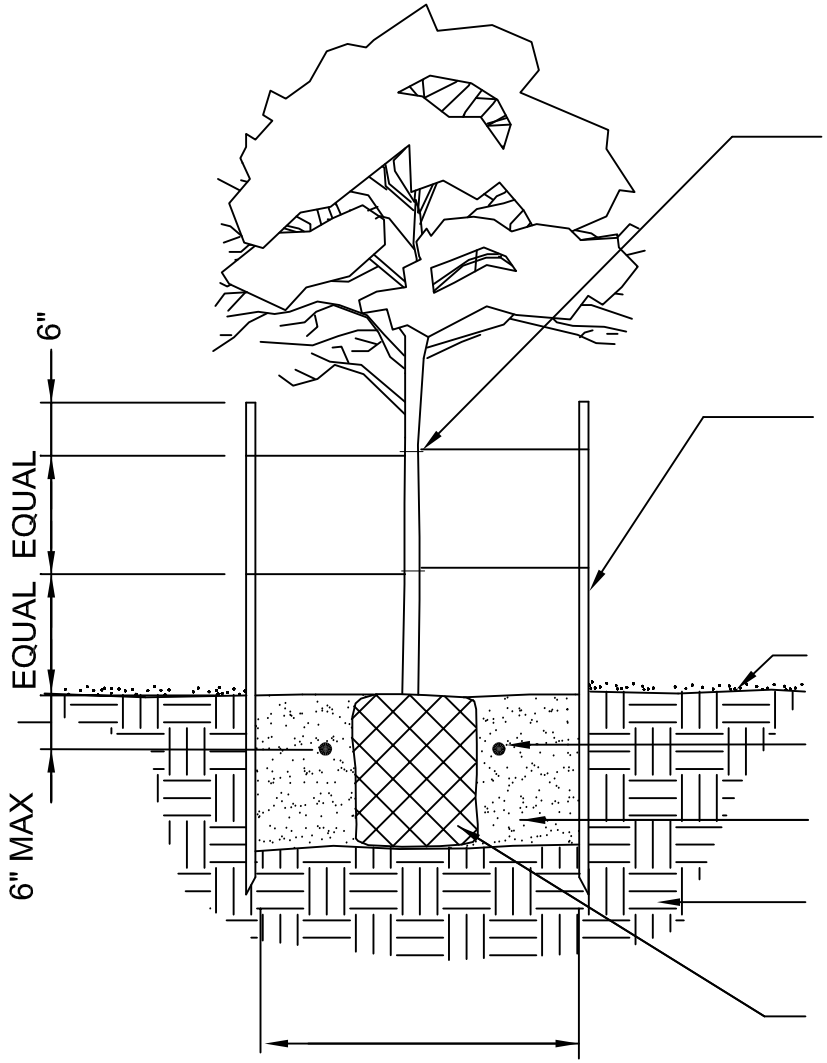

1/2" I.D. REINFORCED RUBBER HOSE, MAINTAIN 8" - 12" LOOP. TIE WIRE TO BE 12 AWG DOUBLE STRAND WIRE. WRAP AROUND TREE STAKE AND STAPLE TO HOLD IN PLACE.

2-2" DIA. X 8' LODGEPOLE PINE TREE STAKES

FINISH GRADE 2" DEPTH DG

PLANT TABLET (SEE SCHEDULE)

BACKFILL MIX (SEE SCHEDULE)

NATIVE SOIL

ROOTBALL

SEE PLANT PIT SCHEDULE

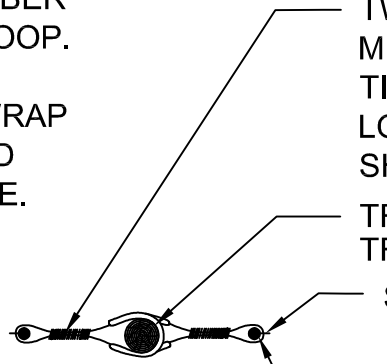

SINGLE-TRUNK

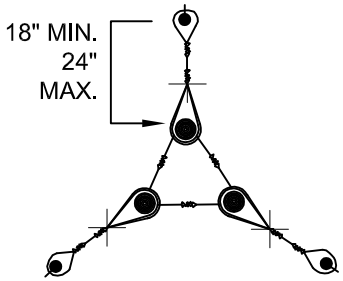

MULTI-TRUNK

PLAN VIEW

TREE STAKING NOTES-

1. STAKE TREES ONLY IF REQUIRED.
2. SET STAKES 6" MINIMUM IN UNDISTURBED SOIL.

* Latest Revision Febuary 2012

DETAIL NO.					DETAIL NO.
C- 801 NTS	CITY OF CHANDLER STANDARD DETAIL	**TREE PLANTING AND STAKING**	APPROVED: CITY ENGINEER DATE: 02/09/12		**C-801**

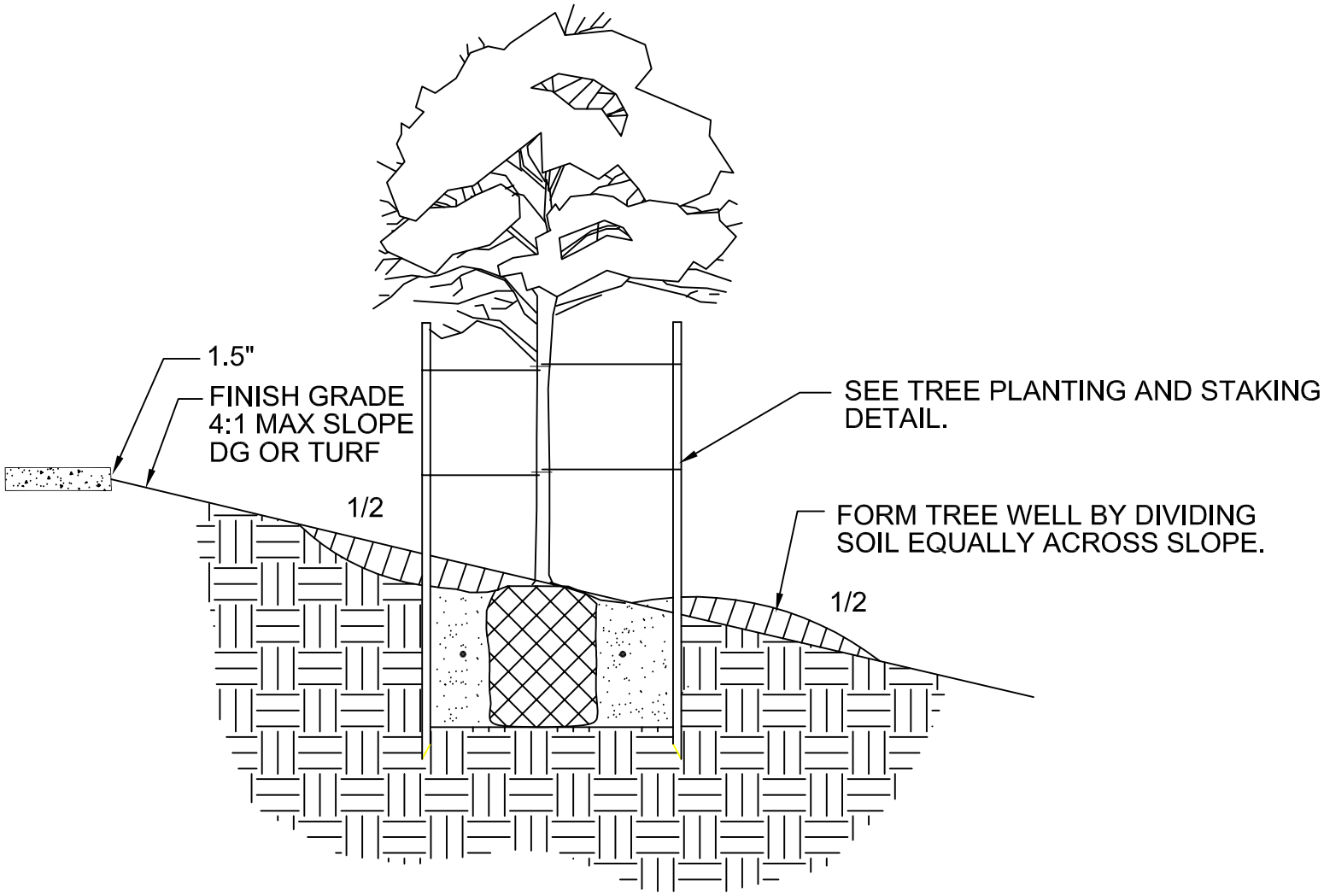

* Latest Revision Febuary 2012

DETAIL NO.					
C- 802 NTS	CITY OF CHANDLER STANDARD DETAIL	**TREE PLANTING SLOPE**	APPROVED: CITY ENGINEER DATE: 02/09/12	DETAIL NO. **C-802**

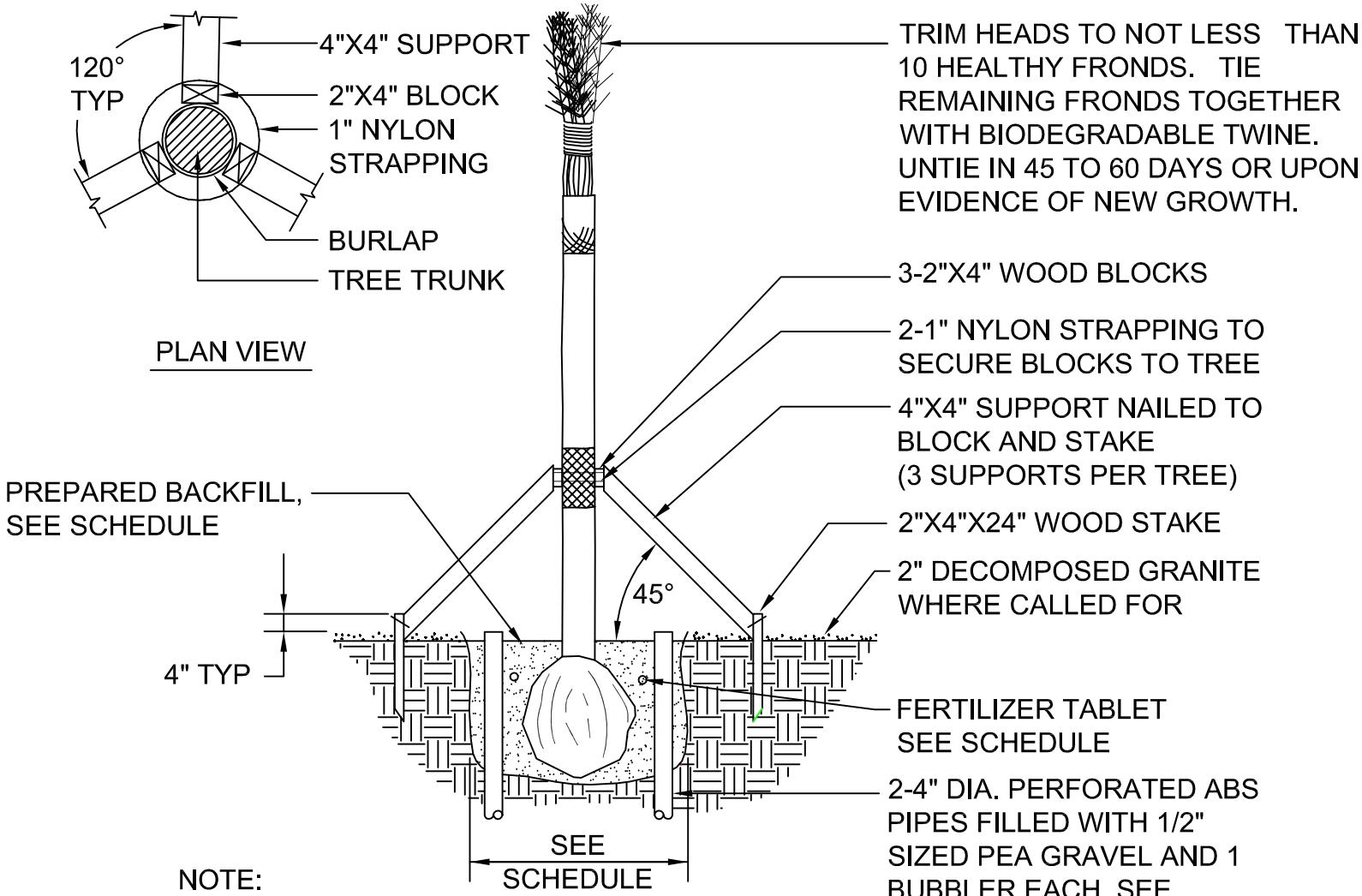

NOTE:
1. DO NOT BURY TRUNK - MAX 6" DEPTH LOWER THAN ORIGINAL PLANT DEPTH.

* Latest Revision Febuary 2012

DETAIL NO.					DETAIL NO.
C- 803 NTS	CITY OF CHANDLER STANDARD DETAIL	**PALM PLANTING AND BRACING**	APPROVED: CITY ENGINEER DATE: 02/09/12		**C-803**

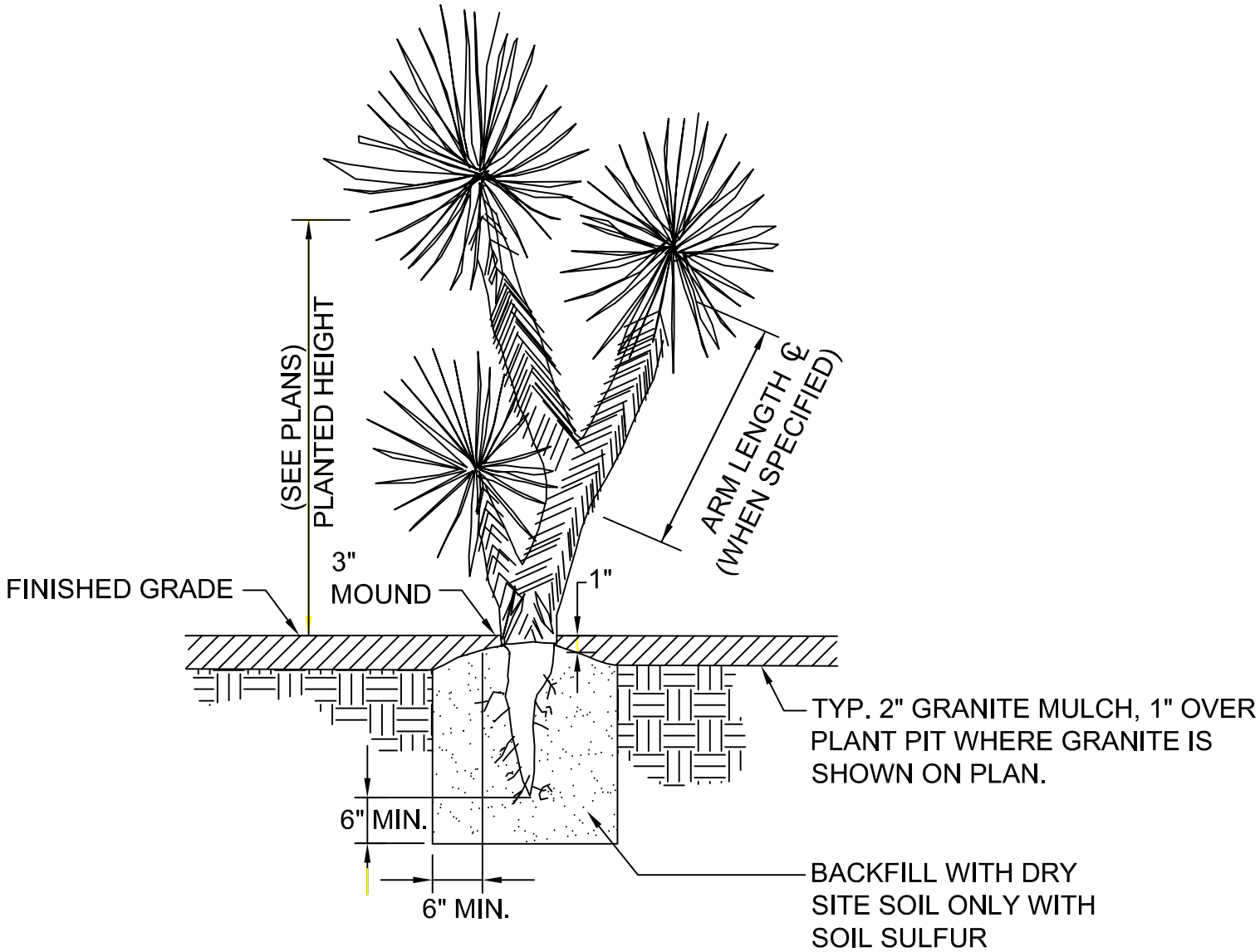

* Latest Revision Febuary 2012

DETAIL NO.					DETAIL NO.
C- 804 NTS	CITY OF CHANDLER STANDARD DETAIL	**CACTUS AND ACCENT PLANTING**	APPROVED: CITY ENGINEER DATE: 02/09/12		**C-804**

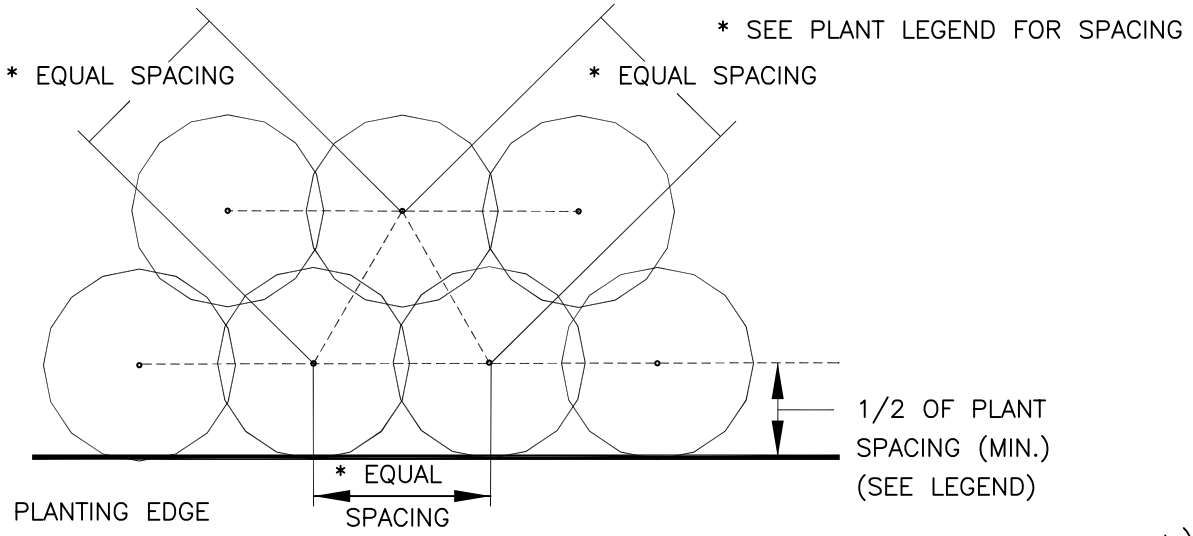

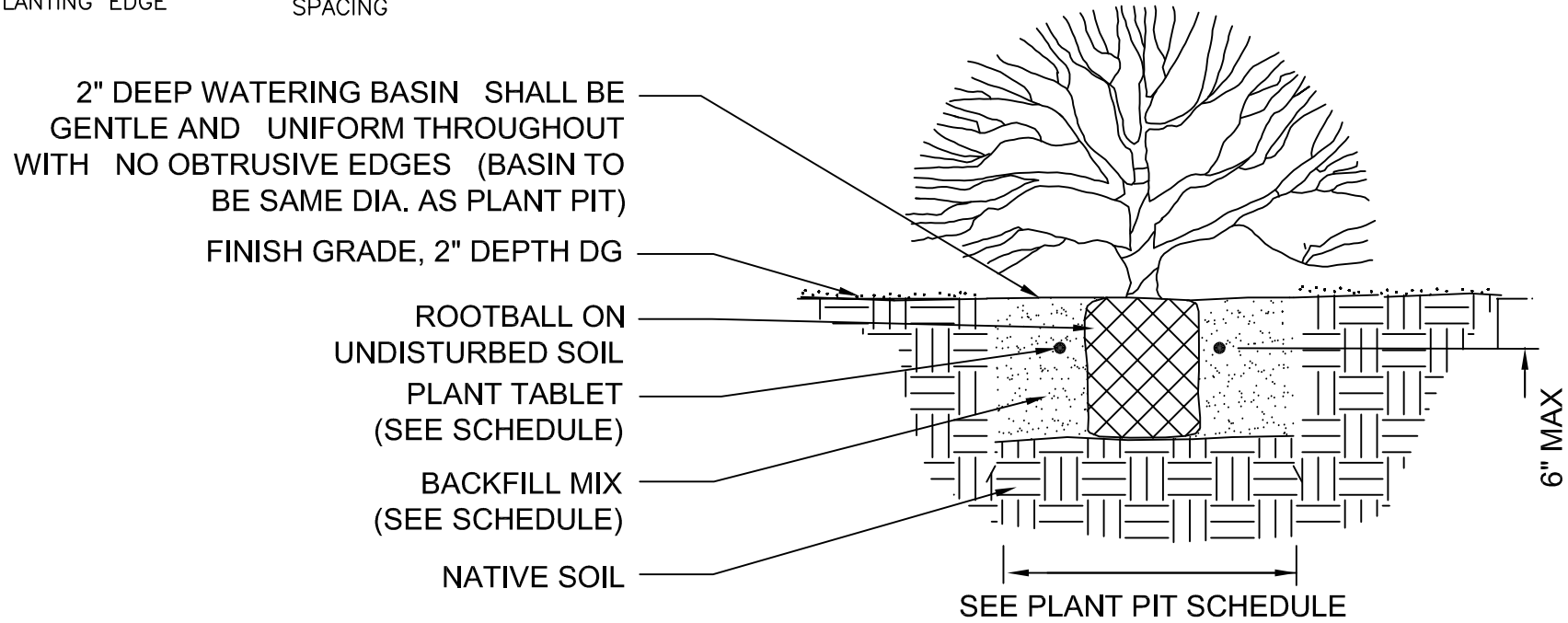

* Latest Revision Febuary 2012

DETAIL NO.					DETAIL NO.
C- 805 NTS	CITY OF CHANDLER STANDARD DETAIL	**SHRUB AND GROUND COVER PLANTING**	APPROVED: CITY ENGINEER DATE: 02/09/12		**C-805**

A - PLANTING PIT DIMENSIONS FOR TREES, SHRUBS, GROUNDCOVERS, CACTUS AND ACCENTS

PLANT SIZE	WIDTH	DEPTH
1 GALLON	2X's the width of the Root Ball	Same Depth as Root Ball
5 GALLON	2X's the width of the Root Ball	Same Depth as Root Ball
15 GALLON	3X's the width of the Root Ball	Same Depth as Root Ball
24" BOX	3X's the width of the Root Ball	Same Depth as Root Ball
30" BOX	3X's the width of the Root Ball	Same Depth as Root Ball
36" BOX	3X's the width of the Root Ball	Same Depth as Root Ball
48" BOX	3X's the width of the Root Ball	Same Depth as Root Ball

B - PLANT PIT DIMENSIONS FOR PALMS

TRUNK DIAMETER AT GRADE	MINIMUM DIAMETER PLANTING PIT	MINIMUM DEPTH PLANTING PIT
12 – 24"	48"	42"
25 – 32"	56"	44"
33 – 36"	60"	48"

C - PLANT TABLET SCHEDULE FOR TREES, SHRUBS, CACTUS, ACCENTS AND PALMS

TREES, SHRUBS, CACTUS AND ACCENTS

1 GALLON	1 TABLET
5 GALLON	2 TABLETS
15 GALLON	4 TABLETS
24" BOX	6 TABLETS
36" BOX	8 TABLETS
48" BOX	10 TABLETS

PALMS

1 TABLET PER 2 FEET OF TRUNK HEIGHT

D - BACKFILL MIX

TREES AND SHRUBS

3 PARTS EXCAVATED TOPSOIL
1 PART SAND
PLANT TABLETS PER SCHEDULE C

CACTUS AND ACCENTS

1 PART EXCAVATED TOPSOIL
1 PART SAND
PLANT TABLETS PER SCHEDULE C

PALMS

PALM TREE BACKFILL SHALL BE 100% SAND.
PLANT TABLETS PER SCHEDULE C

* Latest Revision Febuary 2012

DETAIL NO.					DETAIL NO.
C- 806 NTS	CITY OF CHANDLER STANDARD DETAIL	PLANT PIT SCHEDULE	APPROVED: CITY ENGINEER DATE: 02/09/12		C-806

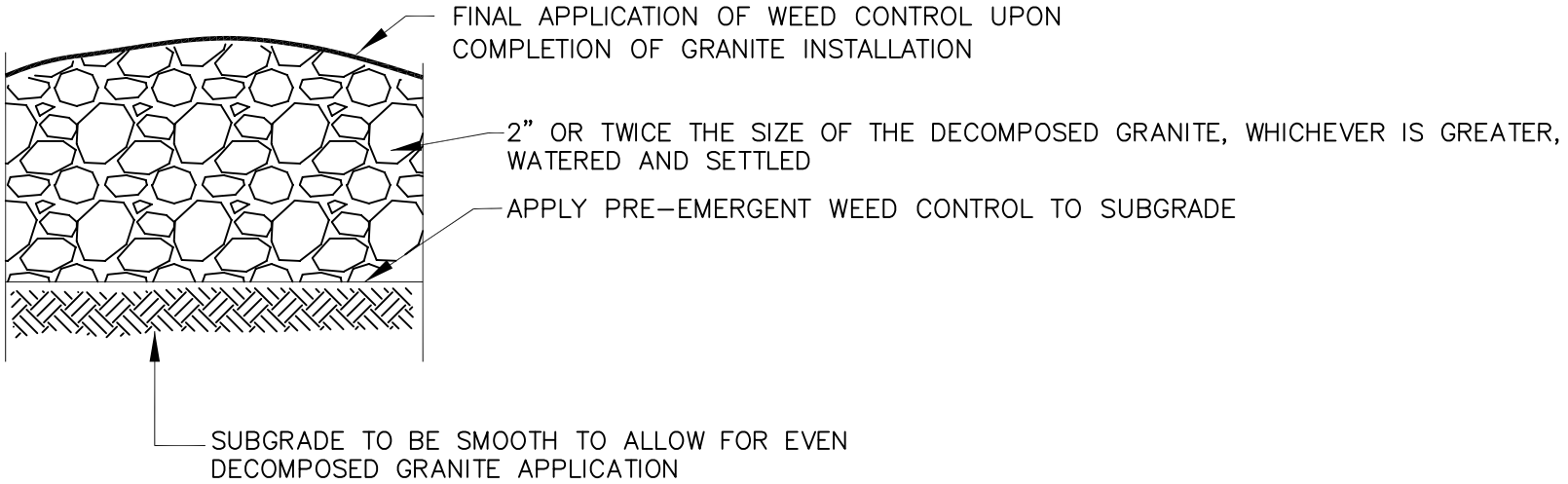

(A) GRANITE DETAIL

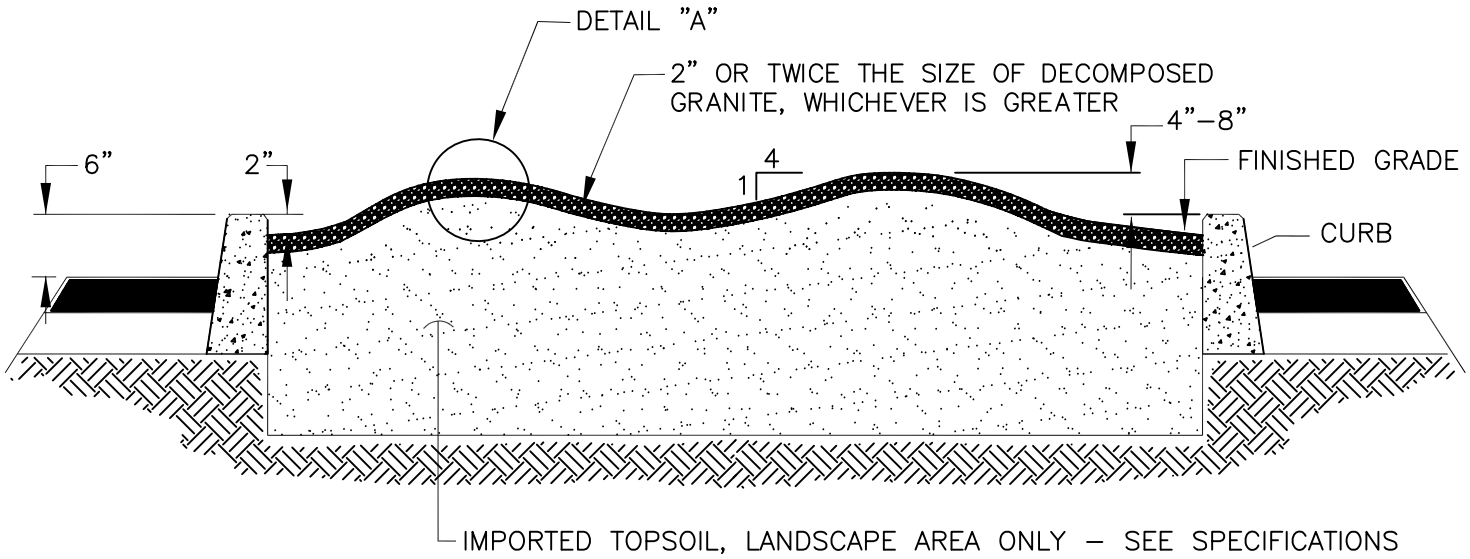

DETAIL NO.					DETAIL NO.
C-807 NTS	CITY OF CHANDLER STANDARD DETAIL	**MEDIAN**	APPROVED: CITY ENGINEER	DATE: 01-09-2020	**C-807**

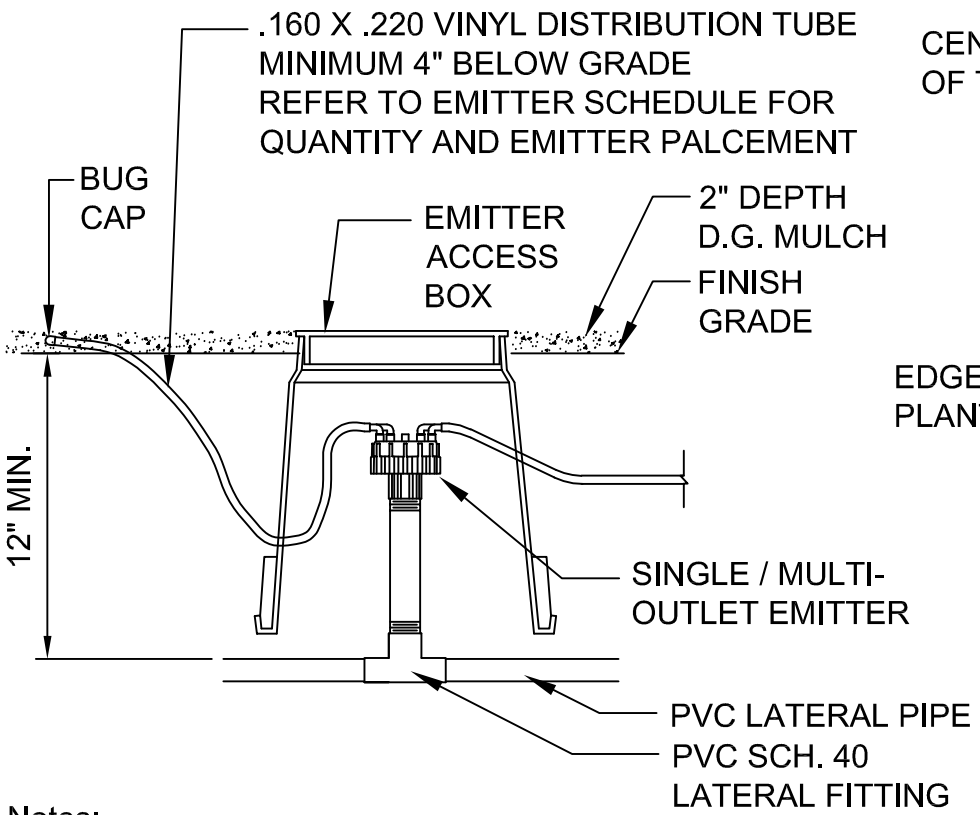

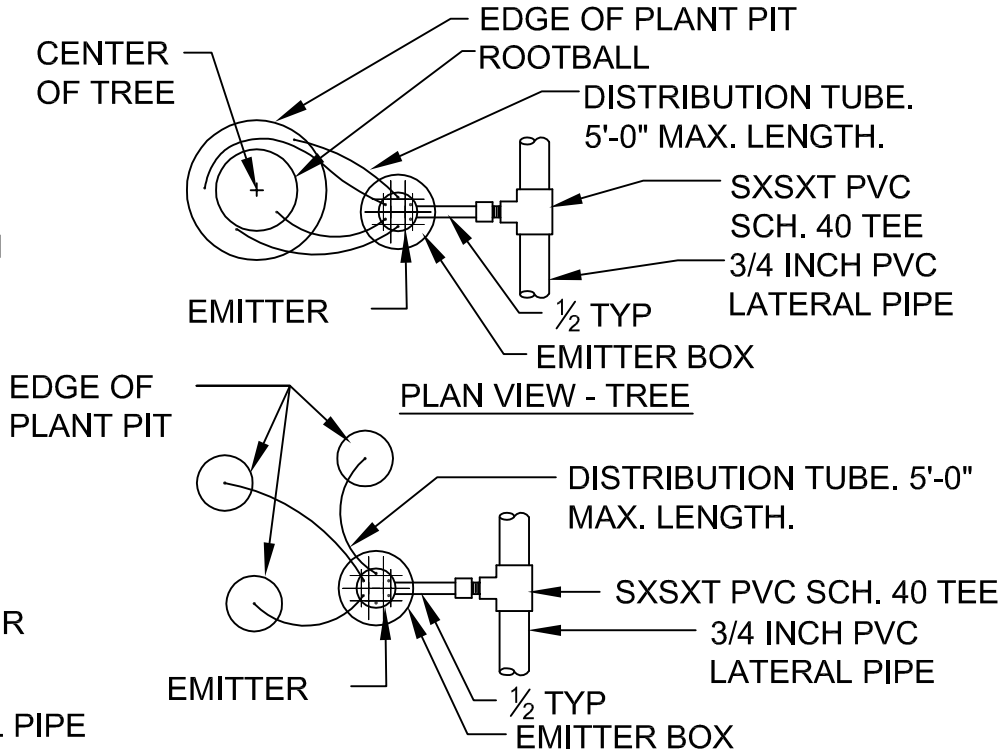

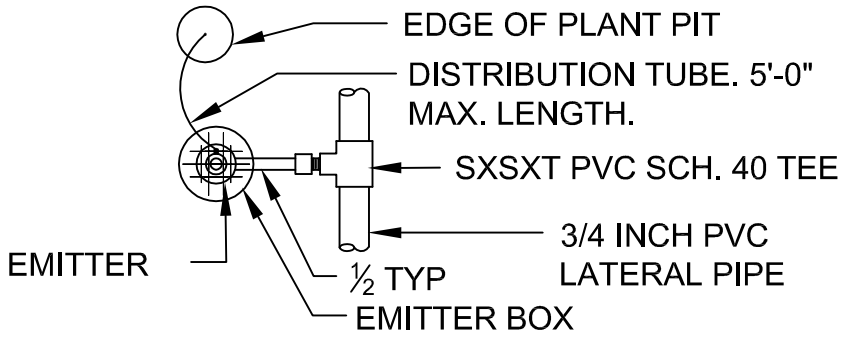

Notes:

1. Emission points shall be located uphill of plant centerline and shall deliver water directly to root ball (typ.)
2. At least one emitter tube outlet shall be located within 4" of plant centerline.
3. All basins 2" deep. Basins to be same level as plant pit.
4. Place emitter so that top edge of emitter is visible above finished grade
5. Number of openings and emitter tubes required per plant is based on plant size. See Emitter Schedule.

* Latest Revision Febuary 2012

DETAIL NO.					DETAIL NO.
C- 808 NTS	CITY OF CHANDLER STANDARD DETAIL	**EMITTER ACCESS BOX AND EMITTER LAYOUT**	APPROVED: CITY ENGINEER		**C-808**
			DATE: 02/09/12		

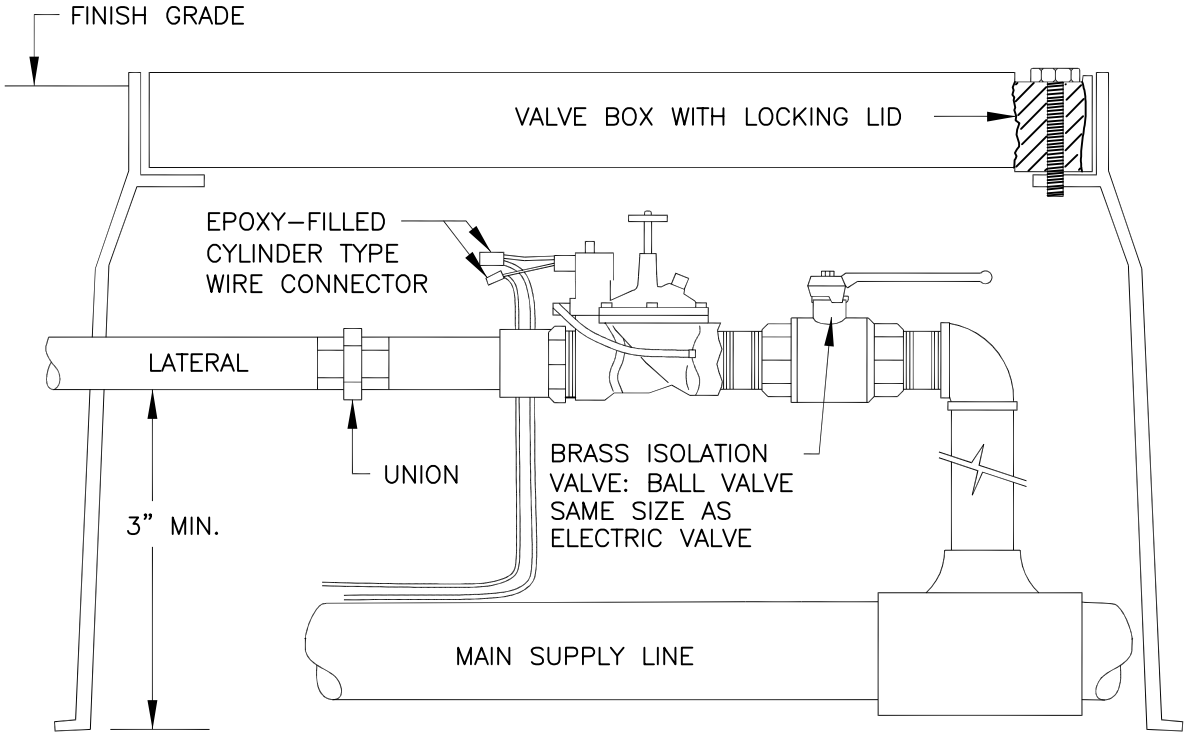

NOTES:

1. PROVIDE EXPANSION COILS AT EACH WIRE CONNECTION.
2. QUICK COUPLERS SHALL BE IN SEPERATE VALVE BOXES.
3. PEA GRAVEL SHALL BE 4" TO 6" IN DEPTH UNDER VALVE BOX.
4. ALL PVC THREADED FITTINGS SHALL BE SCHEDULE 80.

* Latest Revision Febuary 2012

DETAIL NO. **C- 809** NTS	CITY OF CHANDLER STANDARD DETAIL	**REMOTE CONTROL ELECTRIC VALVE TURF**	APPROVED: CITY ENGINEER DATE: 02/09/12	DETAIL NO. **C-809**

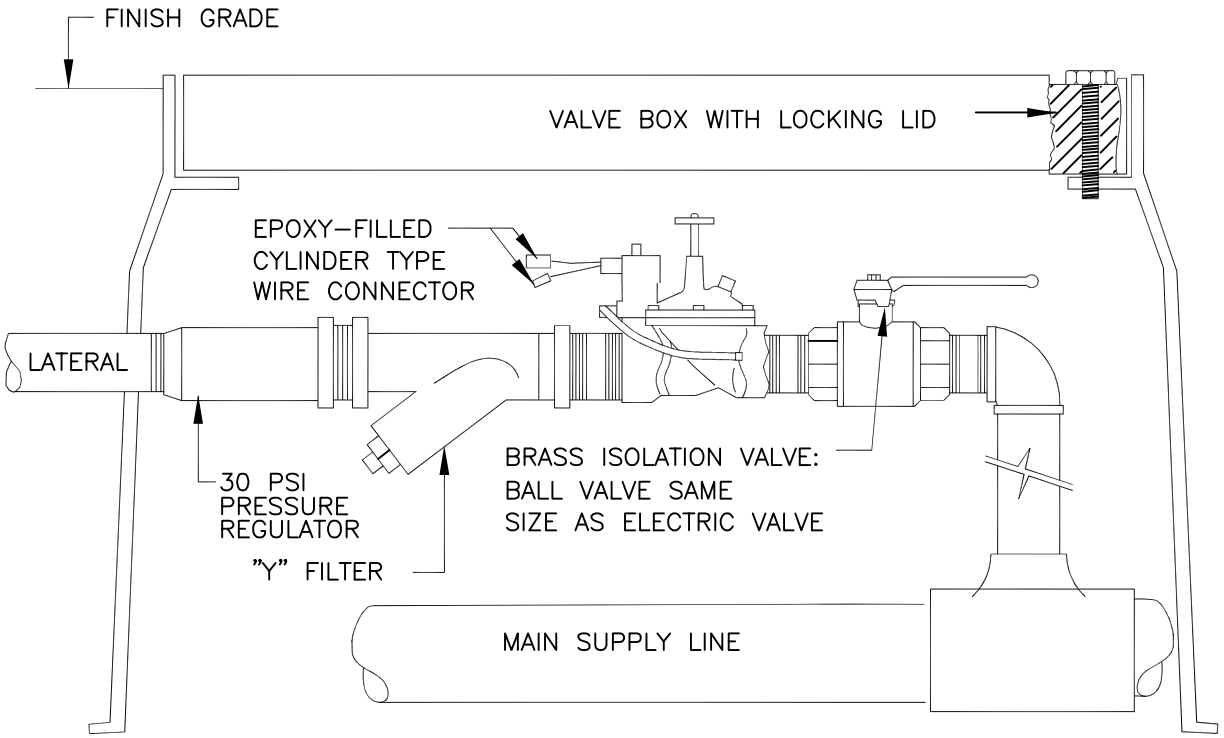

NOTES:

1. PROVIDE EXPANSION COILS AT EACH WIRE CONNECTION.
2. QUICK COUPLERS SHALL BE IN SEPERATE VALVE BOXES.
3. PEA GRAVEL SHALL BE 4" TO 6" IN DEPTH UNDER VALVE BOX.

* Latest Revision Febuary 2012

DETAIL NO. **C- 810** NTS	CITY OF CHANDLER STANDARD DETAIL	**REMOTE CONTROL ELECTRIC VALVE DRIP**	APPROVED: CITY ENGINEER DATE: 02/09/12	DETAIL NO. **C-810**

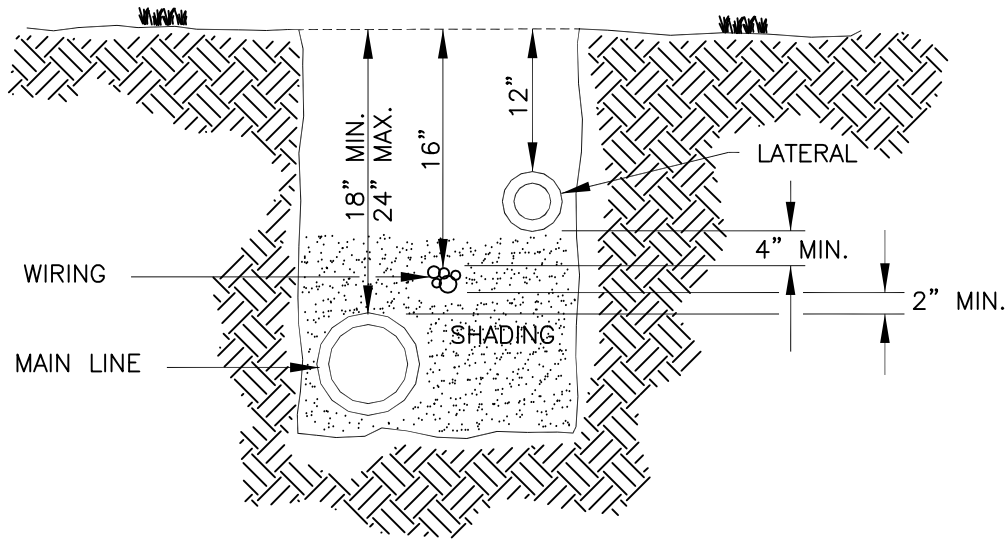

NOTES:

1. ALL PIPE INSTALLATION, TRENCH EXCAVATION, BACKFILLING AND COMPACTION SHALL CONFORM WITH MAG SEC. 440 AND 601.
2. TAPE AND BUNDLE WIRING AT 10 FEET INTERVALS.
3. SHADING SHALL BE DONE WITH NATIVE SOIL.
4. DEPTH DIMENSION MAY VARY WHERE INDICATED ON IRRIGATION PLAN.
5. ALL PIPE INSTALLED UNDER PAVED SURFACES SHALL BE PLACED IN PVC SLEEVING, 2 TIMES THE NOMINAL SIZE OF THE PIPE*.
   *ALL IRRIGATION WORK WITHIN THE PUBLIC R.O.W. REQUIRES A SEPARATE PERMIT.

* Latest Revision Febuary 2012

DETAIL NO.					DETAIL NO.
C- 811 NTS	CITY OF CHANDLER STANDARD DETAIL	**IRRIGATION TRENCH**	APPROVED: CITY ENGINEER DATE: 02/09/12		**C-811**

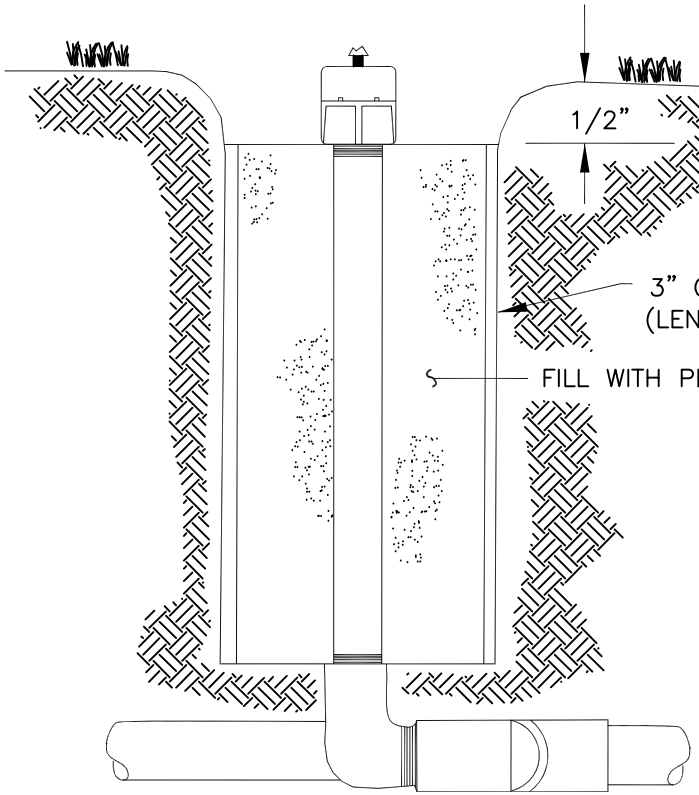

SECTION A - A

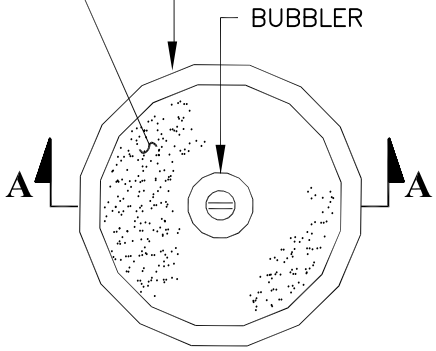

PLAN

* Latest Revision Febuary 2012

DETAIL NO.					DETAIL NO.
C- 812 NTS	CITY OF CHANDLER STANDARD DETAIL	**BUBBLER**	APPROVED: CITY ENGINEER DATE: 02/09/12		**C-812**

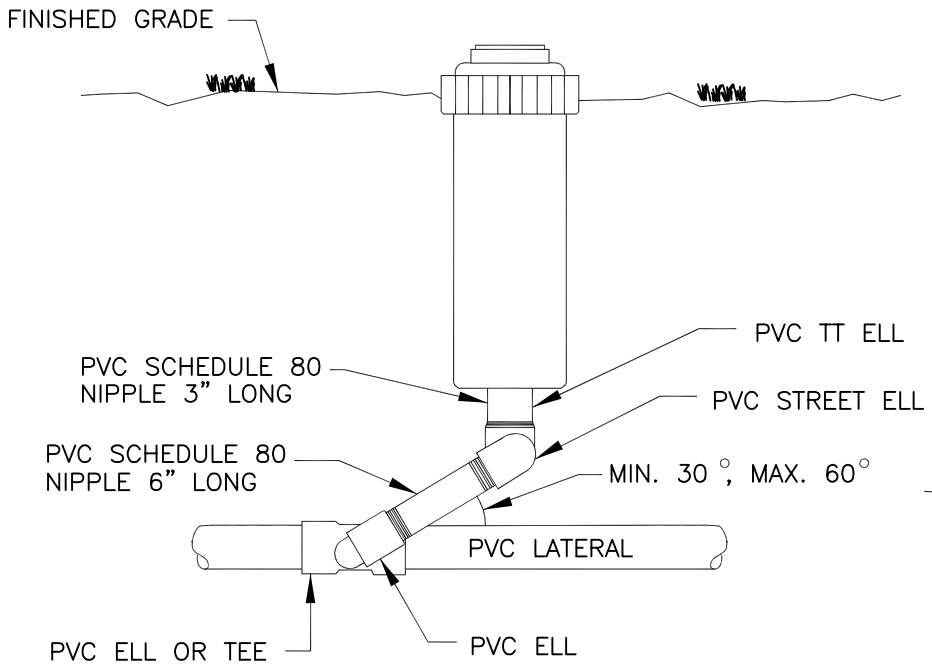

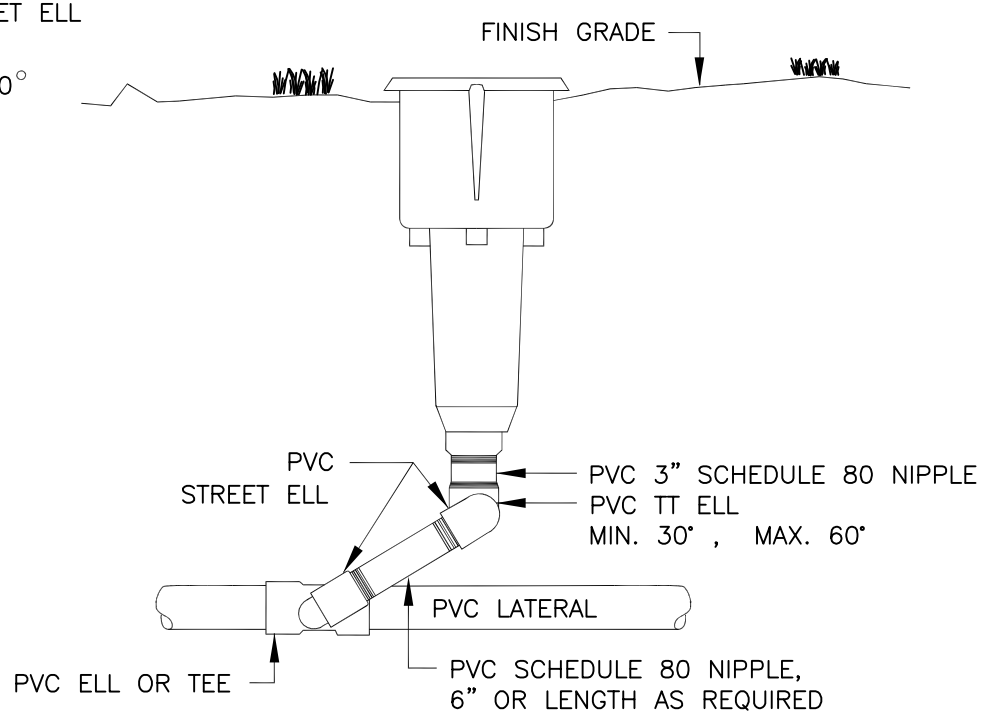

NOTES:

1. INSTALL SPRINKLER 1" ABOVE GRADE UNTIL TURF IS ESTABLISHED THEN ADJUST FLUSH TO GRADE.
2. ALL FITTINGS TO BE SCHEDULE 80.

* Latest Revision Febuary 2012

DETAIL NO.					DETAIL NO.
C- 813 NTS	CITY OF CHANDLER STANDARD DETAIL	**GEAR-DRIVEN POP-UP ROTOR**	APPROVED: CITY ENGINEER DATE: 02/09/12		**C-813**

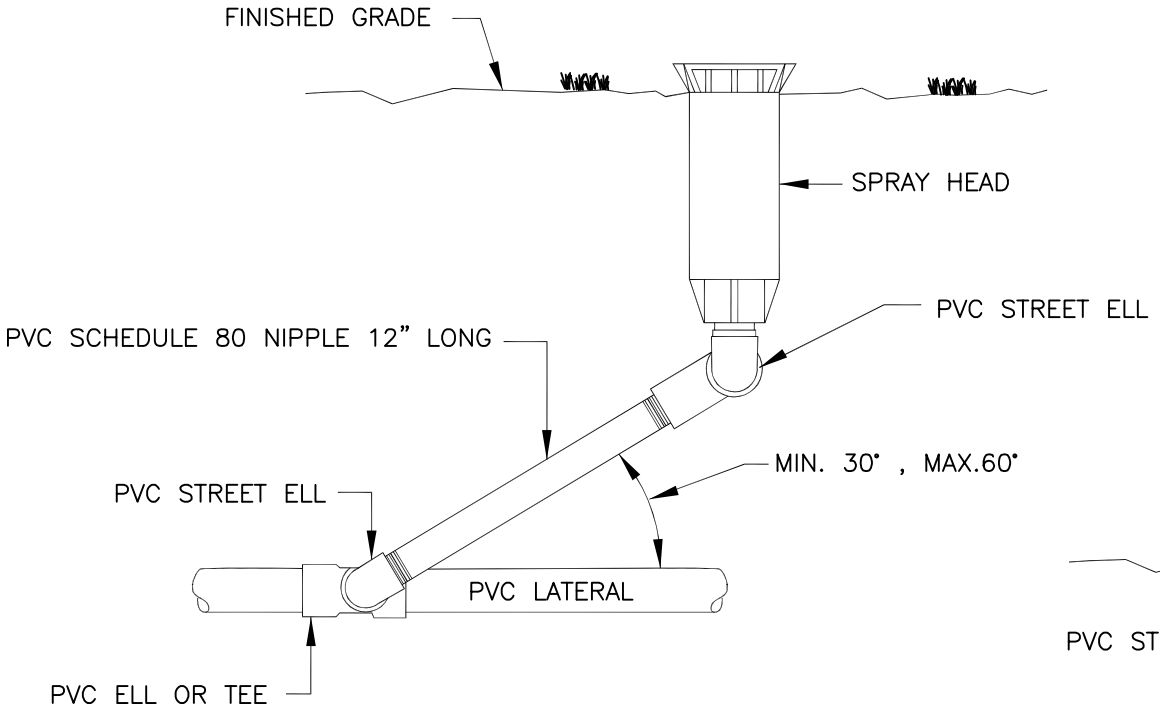

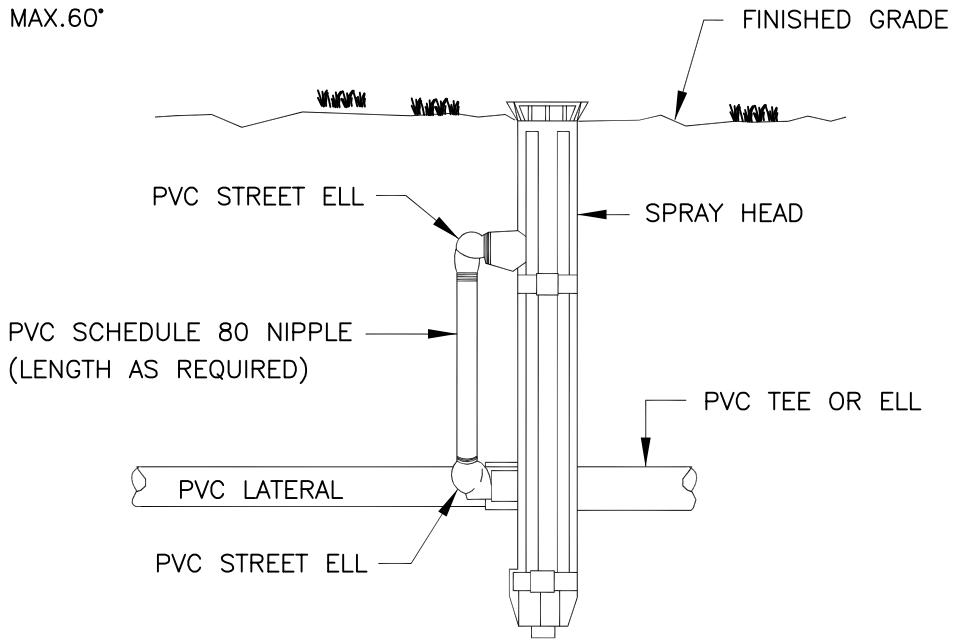

NOTE:

ALL FITTINGS TO BE SCHEDULE 80.

* Latest Revision Febuary 2012

DETAIL NO.					
C- 814 NTS	CITY OF CHANDLER STANDARD DETAIL	**POP-UP SPRAY HEAD**	APPROVED: CITY ENGINEER DATE: 02/09/12	DETAIL NO. **C-814**

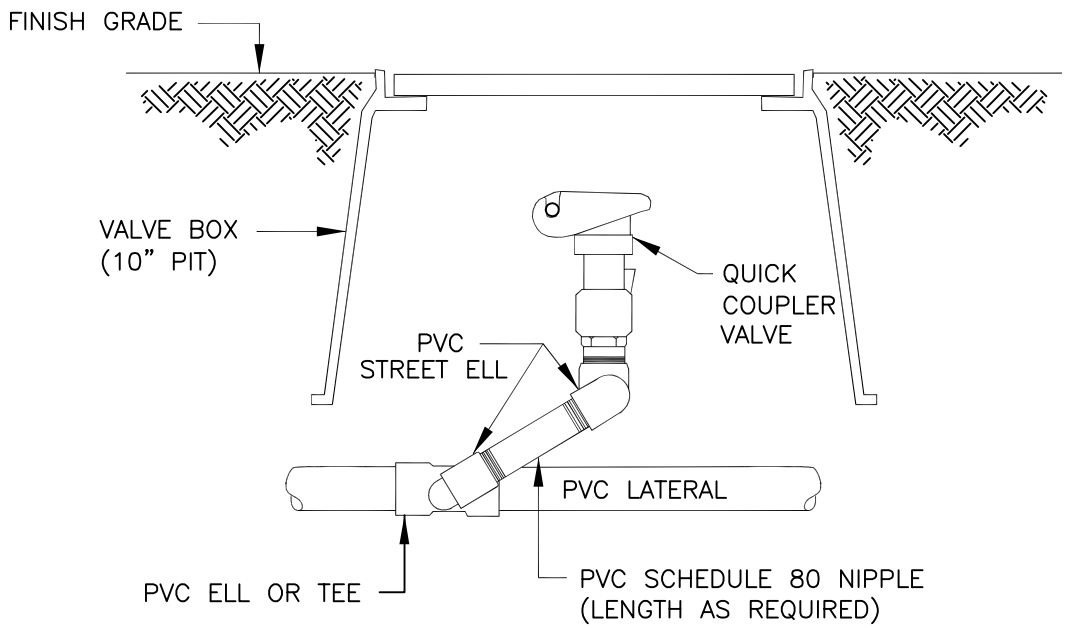

NOTES:

1. EACH QUICK COUPLER SHALL BE IN A SEPERATE VALVE BOX.
2. PROVIDE ONE (1) QUICK COUPLER KEY FOR EACH QUICK COUPLER VALVE.
3. PLACE 4" TO 6" DEPTH PEA GRAVEL UNDER VALVE BOX.
4. QUICK COUPLER SHALL HAVE LOCKING RUBBER COVER.

* Latest Revision Febuary 2012

DETAIL NO. **C- 815** NTS	CITY OF CHANDLER STANDARD DETAIL	**QUICK COUPLER**	APPROVED: CITY ENGINEER DATE: 02/09/12		DETAIL NO. **C-815**

IRRIGATION LEGEND

SYMBOL	MFG. AND DESCRIPTION	QUANTITY

FRICTION LOSS

PRESSURE AT SOURCE _____ P.S.I.

PRESSURE VERIFIED WITH CITY _____ P.S.I.

FRICTION LOSS THROUGH: (TO FARTHEST HEAD)

WATER METER _____ P.S.I.

VACUUM BREAKER _____ P.S.I.

MAIN LINE PIPE _____ P.S.I.

VALVE _____ P.S.I.

LATERAL LINE PIPE _____ P.S.I.

TOTAL FRICTION LOSS _____ P.S.I.

REQUIRED PRESSURE AT HEAD _____ P.S.I.

(TOTAL FRICTION LOSS)+(REQUIRED P.S.I. AT HEAD) = PRESSURE REQUIRED AT SOURCE _____ P.S.I.

CALCULATIONS PERFORMED BY _____ _____

SIGNED DATE

* Latest Revision Febuary 2012

DETAIL NO.					DETAIL NO.
C- 816 NTS	CITY OF CHANDLER STANDARD DETAIL	TYPICAL IRRIGATION LEGEND AND INFORMATION	APPROVED: CITY ENGINEER	DATE: 02/09/12	C-816

A - EMITTER SCHEDULE FOR TREES, SHRUBS, GROUNDCOVERS AND ACCENTS

PLANT SIZE	TYPE OF EMITTER	NUMBER OF EMITTERS	GALLONS PER HOUR PER PLANT
1 GALLON	SINGLE OR MULTI	1	.6 or 1
5 GALLON	SINGLE OR MULTI	1	.6 or 1
15 GALLON	MULTI	4	4
24" BOX	MULTI	4	4
30" BOX	MULTI	6	6
36" BOX	MULTI	6	6
48" BOX	MULTI	6	6

B - BUBBLER SCHEDULE FOR PALMS

TRUNK DIAMETER AT GRADE	NUMBER OF BUBBLERS
12 – 24"	2
25 – 32"	2
33 – 36"	2

C - CACTUS

DO NOT PROVIDE IRRIGATION TO CACTUS

NOTES:

1. REFER TO EMITTER AND BUBBLEER DETAILS FOR SPECIFICATIONS AND LAYOUT INFORMATION.
2. ADJUST IRRIGATION OPERATING TIMES TO ACCOMMODATE PLANT MATURITY, SOIL TYPE, PLANT EXPOSURE AND SEASONAL REQUIREMENTS.

* Latest Revision Febuary 2012

DETAIL NO.					DETAIL NO.
C- 817 NTS	CITY OF CHANDLER STANDARD DETAIL	EMITTER-BUBBLER SCHEDULE	APPROVED: CITY ENGINEER DATE: 02/09/12		C-817